DIRAK®

CATALOG

C22

HINGES

LATCHES

SWINGHANDLES

QUARTER-TURNS

MULTI-POINT LATCHES

FASTENING TECHNOLOGY

HANDLES

GASKETS

Dear readers,

This catalog includes an excerpt of our standard assortment. If you do not find the right product here, please visit our website **DIRAK.com** or get in touch with your contact person.

Does your application have special requirements? Our experts will find the right solution and develop the right product for your application.

Would you like to stay proactively informed about current issues from our company and not miss anything else new? Then simply subscribe to the **DIRAK Newsletter** on our website.

You will find additional details such as CAD data and 3D previews on the website. Just follow the QR code.

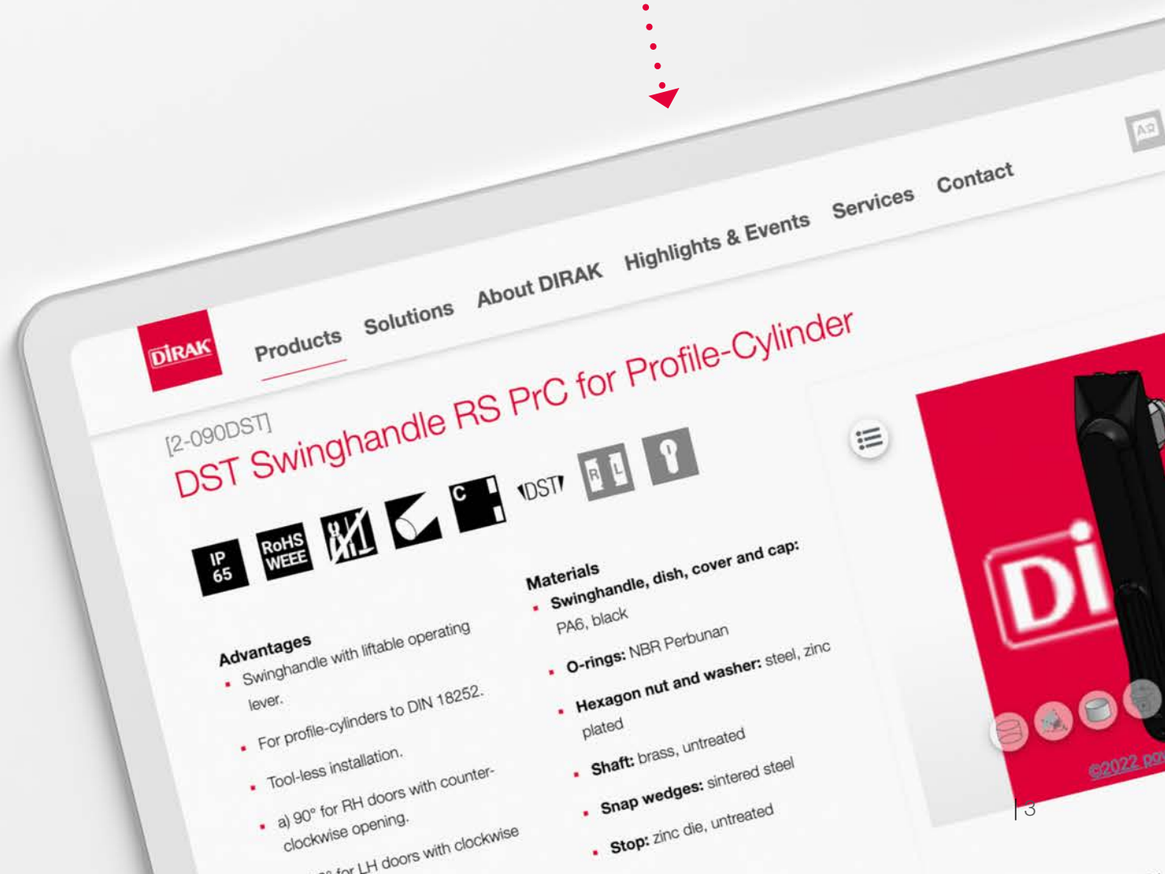

Do you not have a contact person yet?
Simply scan the QR code and our contact finder will help you from there.

Discover the world of DIRAK on LinkedIn

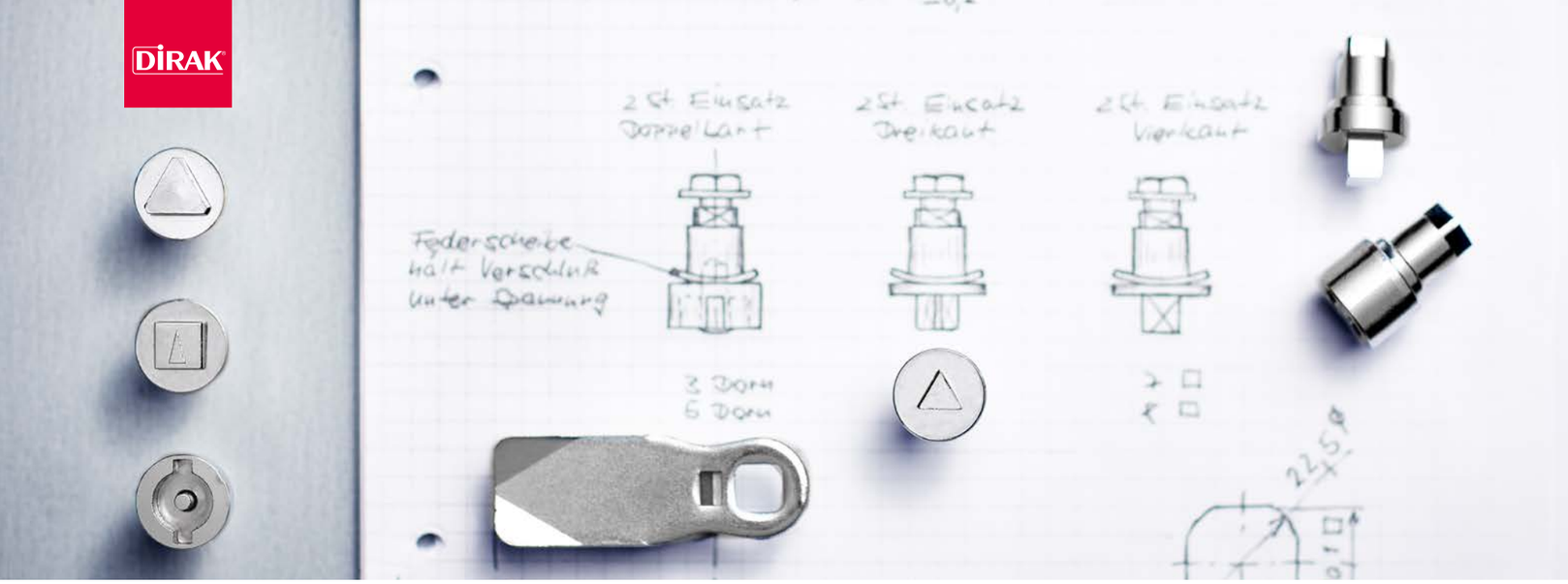

PIONEERING.

We are one step ahead of the competition in developing solutions for latch, hinge and fastening technology, sustainably meeting the requirements of our customers today so that life without these solutions would be unimaginable tomorrow.

PRECISE.

We understand our customers‘ needs and ensure our competitiveness with well planned, efficient and customer-orientated processes and procedures.

PERSONAL.

With the right contacts in the right places, we think and act globally for our customers, emphasizing personal and sustainable contact and competent consulting.

E-mobility

Heating, ventilation and air conditioning

Telecommunication

Rail traffic

Medical instrument construction

Traffic engineering and tunnel construction

Machine- and plant building

Food processing Industry

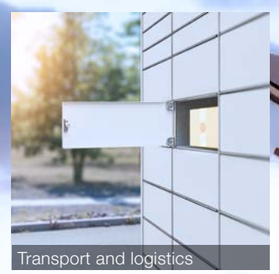
Transport and logistics

Energy and environmental technology

Enclosures and garages

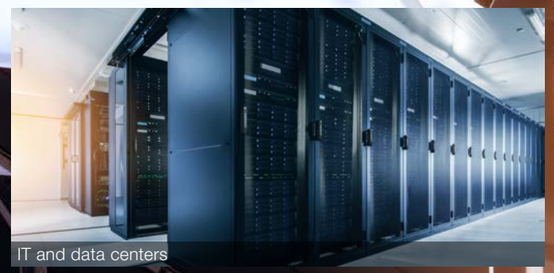
IT and data centers

Your application

THE RIGHT SOLUTION FOR EVERY APPLICATION

We are valued as a competent partner wherever housings are locked, doors move or elements are connected. In various projects we demonstrate our development competence in different fields of application.

We would be happy to become familiar with your application as well and find a solution together that is tailor-made to suit your requirements.

COMPETENCE.
DEVELOPMENTS CAREFULLY PLANNED IN ADVANCE.
OR INVENTED ESPECIALLY FOR YOU.

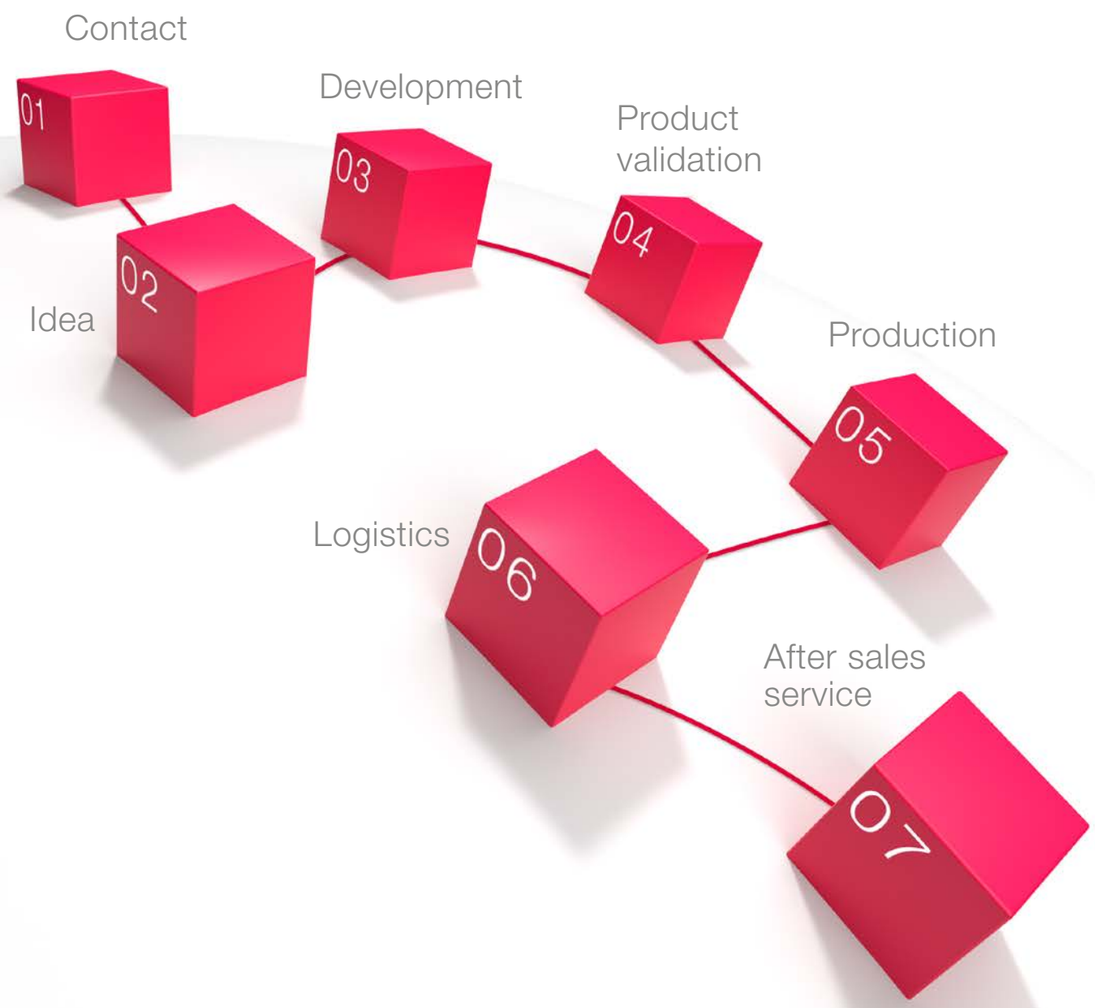

DIRAK – EMBODYING THE INVENTIVE SPIRIT

Dieter Ramsauer developed a great interest in things mechanical at a young age. He disassembled and reassembled them to discover their inner workings and understand how they worked.

At the age of 13, after completing elementary school, he began studying to become a toolmaker. After his first position as a designer, he moved to what was then the largest automotive supplier. Here he developed the first patented quarter-turns and devised a modular latching system that is still in use and setting worldwide standards today.

Over the course of subsequent career stages, Dieter Ramsauer gained valuable experience as a sales engineer, working with customers and sharpening his perspective of customers‘ needs. He made himself financially independent in 1973 with a one-man engineering office, designing numerous patentable products.

With this inventive spirit he laid the groundwork for sustainable innovations and in 1991 he founded Dieter Ramsauer Konstruktionselemente GmbH (DIRAK).

dieter-ramsauer.com

5000

A wide assortment for your application.

From the concept stage until the order is fulfilled and delivered, we always focus on your requirements and are at your side as a reliable partner – we are not satisfied until you are. More than 5000 catalog products from 11 product groups offer diverse solutions for your application.

50%

Individual solutions, specially developed.

Our commitment is always to find the best possible solution that meets your specific requirements. With a team of 14 designers, our development never stops and always incorporates the highest degree of precision and passion. We will invent what you need.

300

Highest delivery reliability.

Service, reliability and an efficient supply chain are the attributes of our assembly and logistics center in Sprockhövel. More than 300 packages are processed here every day. With consistent conveyor transport from incoming goods through assembly to shipping, we ensure that you receive the products you want on time with top delivery reliability.

100%

Reliable for all conditions.

Our products are used in many different applications and are subject to various influences and stresses. To ensure we always deliver high-quality products, we check our products during the development phase and before market release as part of the product lifecycle in our in-house product validation, or we make use of a wide network of service providers and test laboratories.

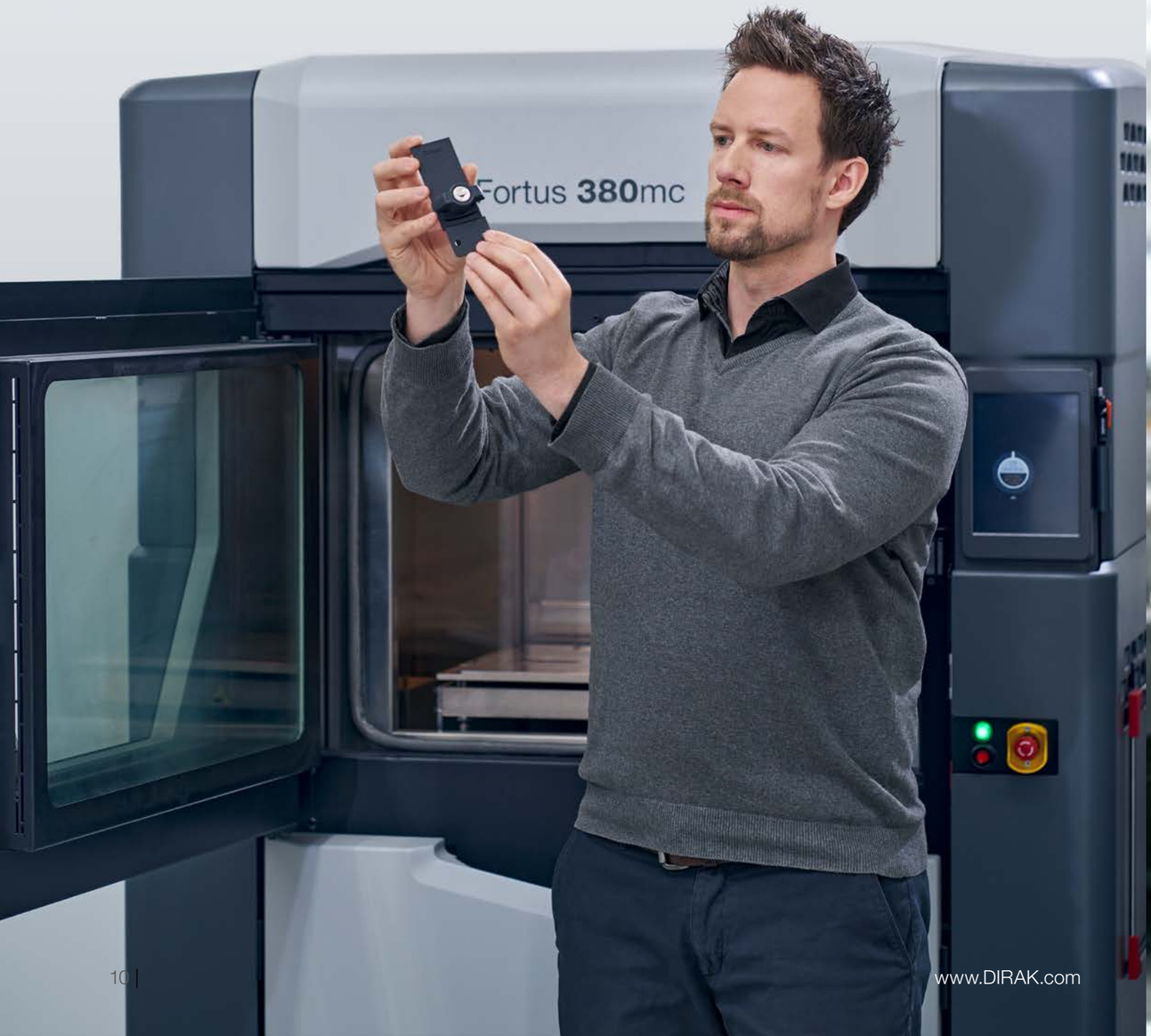

HIGH-STRENGTH CONNECTIONS.
SIMPLE. SECURE. DIRAK-SNAP-TECHNOLOGY.

In a world full of connections, we deliver pioneering technology.
With DIRAK-SNAP-Technology, you can create high-strength connections with no screws and without tools – so that your idea can safely become great.

Out technology, your benefit:

- High-strength with secure locking and exact fit
- Vibration-proof
- Connects sheets of different thicknesses
- Protective function but can still be disassembled
- Fast, reliable and error-free installation
- Tool-less installation in just a few easy steps
- Electrically conductive connection is available
- Can also be used in poorly accessible bending areas

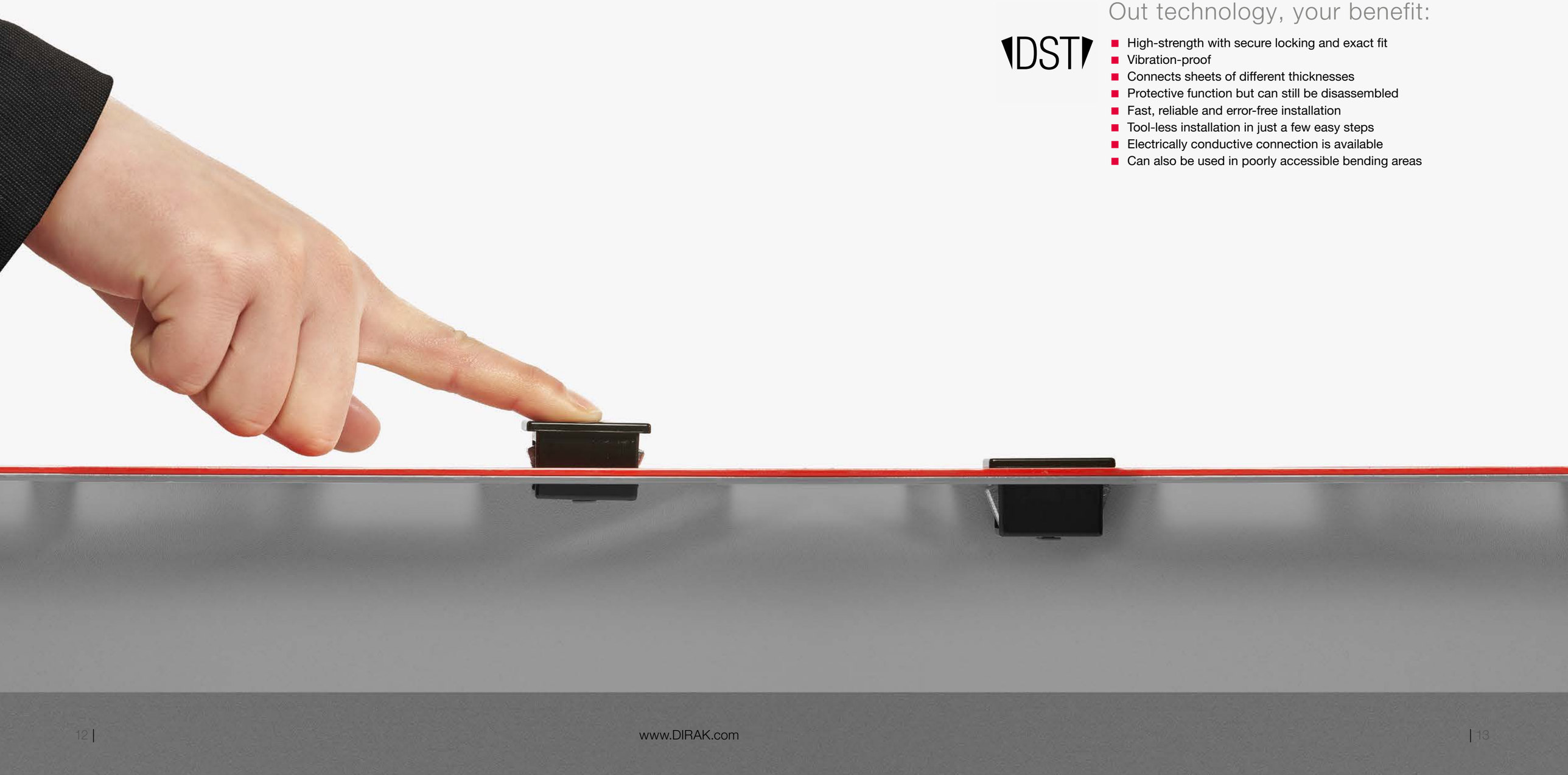

Machine-building

Telecommunications

Outdoor applications

24 365 secure.

THE UNIQUE FEELING OF PROTECTION.

The mechatronic solutions of the E-LINE by DIRAK brand offer modularly designed product systems for industrial data and service cabinets, telecommunications and outdoor housings. The latching solutions can be controlled by management systems so that access is assigned and controlled individually. This ensures data and equipment are reliably protected.

www.elinebydirak.com

Quarter-Turns

Quarter-turns are used as a latching mechanism in numerous applications. They generally consist of a housing, an insert and a cam.

Latches

In addition to standard latches, we offer numerous latching systems for special applications. These include snap locks, over center toggle latches and quick release fasteners.

Handles

We have optimized our assortment of handles for a large number of applications. Numerous handles can be mounted without tools on request.

Swinghandles

In comparison to a simple quarter-turn, swinghandles provide a significantly higher torque. Many cylinders can be used with swinghandles. They also allow for multi-point systems inside and outside of the sealing area of housings.

Hinges

Hinges play a greater role than just moving doors or flaps. They adjust, can be detached, are visible or invisible and adapt to the door situation. With our wide and varied range of hinges, we can meet practically any customer requirement.

Fastening Technology

Our tool-less fastening technology was specially developed for demanding industrial environments and makes it possible to install our components in just seconds.

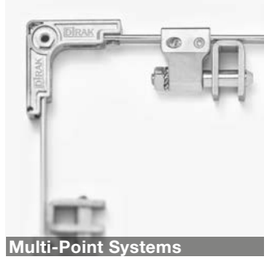

Multi-Point Systems

With multiple latching points, multi-point systems enable especially secure latching, even under high sealing pressure and around corners.

Gaskets

For use in housing and switch cabinet construction, we have developed a variety of gaskets. We offer seals in different cross-sections, profile shapes and fastening variants.

Complementary Products

Our complementary products are optimally coordinated with our assortment and provide versatile help for industrial housing construction.

Quarter-Turns

Swinghandles

Multi-Point Systems

Latches

Hinges

Gaskets

Handles

Fastening Technology

Complementary Products

Index

Quarter-Turns

NEAT AND CLEAN.

Our hygienic products meet the strict requirements of the food industry.

Page 145

WORKING UNDER HIGH PRESSURE.

Products with protection class IP69K resist a stream of water at high pressure and remain water-tight.

Page 56

Page 60

(Re-)adjustment is no problem.

These products can be adjusted without tools, making it as easy as pie to adapt the closing pressure.

Page 58

Many good properties combined.

The compression quarter-turn combines the flat head shape with the locking position display and extended shaft for adjusting the cam height.

Page 171

Won‘t give dirt a chance.

The spring-loaded polyamide folding lid prevents dust and dirt from soiling the quarter-turn.

Page 74

DIRAK-SNAP-Technology.

Did you know? Most of our products are also available with DIRAK-SNAP-Technology (DST).

Page 105

Closed and protected.

The wing knob insert encloses the housing of the quarter-turn so that dust and water cannot penetrate in accordance with protection class IP66.

Page 42

Small but impressive.

The new flat head shape of this quarter-turn series features a modern design and low installation height.

Page 192

Light and easy to activate.

The rod latch for quarter-turn is suitable as an escutcheon to form a multi-point system for easy locking that is still reliable, all in one process.

Page 100

Unobtrusive.

Thanks to the flush mounted design, the quarter-turn does not extend outward, thereby preventing persons or items from being caught for increased safety, for example in escape routes.

Quarter-Turns by Cutout

Page: **30–35, 38**

Cylinder barrel 33–35
Compression 38
Vibration-proof 38

Page: **40–41**

Compression 40–41
Vibration-proof 40–41

Page: **42–45, 47–48, 50–61, 64–65, 67–73, 75–89, 91–93, 103–129, 141–147**

Hygienic Design (HD) 141, 143, 145, 147
Compression 50-61, 64-65
Vibration-proof 42, 50, 54–55, 58–59, 64–65
Cylinder barrel 87-89, 91, 103–119, 125, 130, 144, 146
Padlock. 121–129

Page: **132–134**

Compression 132–134
Vibration-proof 132–143

Page: **36–37**

Cylinder barrel 36–37

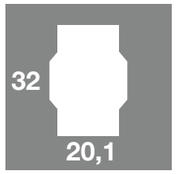

Page: **46, 49, 62–63, 74, 90**

Compression 62–63
Cylinder barrel 90
Vibration-proof 62–63

Page: **136–139**

Page: **66, 94–102, 130–131, 135, 140**

Flush design 94–102
Vibration-proof 94–96
Cylinder barrel 130–131

Overview

30 Quarter-Turn Pr14.1 L13.5 [1-050]

31 Quarter-Turn Pr14.1 L13.5 Stainless Steel [7-050]

32 Quarter-Turn Pr14.1 L13.5 [1-057]

33 Quarter-Turn with Wing Knob Pr14.1 L13.5 [1-056]

34 Cylinder Quarter-Turn Pr14.1 L13.5 [1-053]

36 Quarter-Turn L13.5 with Fixing Clip [1-048]

37 Cylinder Quarter-Turn L13.5 with Fixing Clip [1-054]

38 Compression Latch Pr14.1 [1-045]

40 Compression Latch Pr19.1 [1-067]

42 Safety Quarter-Turn Pr20.1 L18 [1-085.01]

43 Safety Quarter-Turn Pr20.1 L18 Stainless Steel [7-074]

44 Safety Quarter-Turn Pr20.1 L18 [1-085]

46 DST Safety Quarter-Turn Pr32x20 L18 [1-085DST]

47 Safety Quarter-Turn Pr20.1 L18 Stainless Steel [7-075]

48 Quarter-Turn Pr.20.1 L18 with FIAT Insert [1-086]

49 DST Quarter-Turn Pr32x20 L18 with FIAT Insert [1-086DST]

50 Compression Latch Pr20.1 [1-070]

51 Compression Latch Pr20.1 [1-071]

52 Compression Latch Pr20.1 [1-077]

54 Compression Latch Pr20.1 L32 [1-078]

56 Compression Latch Pr20.1 L22/32 Stainless Steel [7-078]

58 Compression Latch Pr20.1 L32 with H-Dimension Adjustment [1-079]

60 Comp. Latch Pr20.1 L22/32 with H-Dim. Adj. Stainless Steel [7-079]

62 DST Compression Latch Pr32x20 L22/28 [1-081DST]

64 Compression Latch Pr20.1 [1-081]

66 Clamping Quarter-Turn Pr21.6 [1-080]

67 Quarter-Turn SOFT-LINE Pr20.1 L18 [1-107]

68 Quarter-Turn 2K Polyamide Pr20.1 L18 [1-092]

70 Quarter-Turn Polyamide Pr20.1 L18 [1-095]

72 Quarter-Turn Pr20.1 L12 [1-083]

74 DST Quarter-Turn Pr32x20 L18 [1-083DST]

75 Quarter-Turn Pr20.1 L18 [1-100.01]

76 Quarter-Turn Pr20.1 L18 [1-100]

78 Quarter-Turn Pr20.1 L18 Stainless Steel [7-080.01]

79 Quarter-Turn Pr20.1 L36 [1-110.01]

80 Quarter-Turn Pr20.1 L30-60 [1-110]

82 Quarter-Turn Pr20.1 L18-50 Stainless Steel [7-083]

83 Quarter-Turn Pr20.1 L18-L60 Stainless Steel [7-080]

84 Quarter-Turn Pr20.1 with Square Threaded Rod [1-100.02]

86 Quarter-Turn with Conical Square Insert Pr20.1 L18 [1-210]

87 Cylinder Quarter-Turn Polyamide Pr20.1 L18 [1-121]

88 Cylinder Quarter-Turn Pr20.1 L18 [1-120]

89 Cylinder Quarter-Turn Pr20.1 L18 Stainless Steel [7-084]

90 DST Cylinder Quarter-Turn Pr32x20 L22 [1-120DST]

91 Cylinder Quarter-Turn Pr20.1 L30-50 [1-120.01]

92 Quarter-Turn with Combination Lock Pr20.1 L18 [1-125]

93 Quarter-Turn with Stepped Cam Pr20.1 L18-60 [1-200]

94 Flush Latch with Integrated Hinge Function [1-162]

96 Flush Quarter-Turn L22-66 [1-112]

98 Flush-mounted Compression Latch L28/L37 Stainless Steel [7-086]

100 Flush-mounted Comp. Latch L28/L37 with H-Dim. Adj. Stainl. Steel [7-087]

102 Flush-mounted Quarter-Turn L20 [1-160]

103 Quarter-Turn with Drip Handle Pr20.1 L18 [1-135]

104 Quarter-Turn with Wing Knob Pr20.1 L18 [1-130]

105 Quarter-Turn with Wing Knob Pr20.1 L18 [7-085.01]

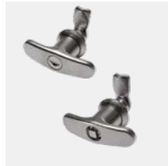
107 Quarter-Turn with T-Handle Pr20.1 L18 [1-142]

108 Quarter-Turn with T-Handle Pr20.1 L18 [1-140]

110 Quarter-Turn with T- Handle and Wing Knob [1-155.02]

112 Quarter-Turn with T-Handle Pr20.1 L18 Stainless Steel [7-090]

113 Quarter-Turn with T-Handle Pr20.1 L30/50 [7-095.02]

114 Quarter-Turn with L-Handle Pr20.1 L18 [1-150]

116 Quarter-Turn with L-Handle Pr20.1 L30-60 [1-155.01]

118 Quarter-Turn with L-Handle Pr20.1 L18 Stainless Steel [7-103]

119 Quarter-Turn with L-Handle Pr20.1 L30/50 [7-095.01]

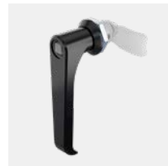
120 Quarter-Turn with L-Handle Pr20.1 L18 [1-151]

121 Quarter-Turn for Padlock Pr20.1 L22/32 [1-117]

122 Quarter-Turn for Padlock Pr20.1 L 18/40 [1-132]

123 Quarter-Turn for Padlock Pr20.1 L18 Stainless Steel [7-085]

124 L-Handle for Padlock Pr20.1 L18/40 [1-154]

125 L-Handle for Padlock Pr20.1 L18 [1-154.01]

126 L-Handle for Padlock Pr20.1 L18 Stainless Steel [7-100]

127 L-Wing-Handle for Padlock Pr20.1 L18 [1-651]

Overview

128 L-Handle for Padlock Pr20.1 L18 [1-153]

129 Quarter-Turn with L-Handle for Padlock Pr20.1 L18 Stainless Steel [7-104]

130 DST Bowed Handle with Quarter-Turn [6-1110DST]

132 Compression Latch Pr22.1 with Flap Stainless Steel [7-071]

134 Compression Latch Pr22.1 with Flap [1-075]

135 DST Quarter-Turn TRENTA Pr30 L18 [1-082DST]

136 Quarter-Turn Polyamide PrA L18 [1-099]

137 DST Quarter-Turn Polyamide PrA L18 [1-100DST]

138 Quarter-Turn PrA L16 [2-040]

139 Dish Handle PrA Stainless Steel [7-072]

140 Quarter-Turn - Firefighting Stainless Steel [7-331]

141 Hygiene Compression Latch Pr20.1 SW13 Stainless Steel [7-081.04HD]

142 Quarter-Turn SW13 Stainless Steel Pr20.1 L18 [7-081.01] [7-081.01HD]

143 Hygiene Quarter-Turn Pr20.1 L18 SW13 Stainless Steel

144 Quarter-Turn with T-Handle and Cylinder Pr20.1 L18 Stainless Steel [7-081.02]

145 Hygiene Quarter-Turn with T-Handle Pr20.1 L18 Stainless Steel [7-081.02HD]

146 Quarter-Turn with L-Handle and Barrel Pr20.1 L18 Stainless Steel [7-081.03]

147 Hygiene Quarter-Turn with L-Handle Pr20.1 L18 Stainless Steel [7-081.03HD]

148 Finger Pull and Inserts for Quarter-Turn Pr14.1 [1-059]

149 Cams for Quarter-Turn Pr14.1 [1-058]

150 Inserts Pr20.1 [1-101]

152 Inserts Stainless Steel Pr20.1 [7-082]

154 Cams L35/45 Steel [1-102]

156 Cams L35/45 Stainless Steel [7-105]

157 Slide Shoe for Cams [1-103]

158 Cams L45 Steel [1-102.01]

159 Cams L35/45 Stainless Steel [7-105.01]

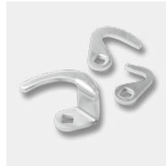
160 Hooked Cams[1-260]

161 Cams with Ramp [1-261]

161 Cams variable[1-262]

162 Slam-Cams [1-264]

163 Slam-Cams for Quarter-Turn Pr20.1 Stainless Steel [7-076]

164 Slam-Cam for Quarter-Turns Pr20.1 [1-265]

165 Roller Cam Height Adjustable [1-105]

166 DST Cam Catch [1-050DST]

167 Handles for Quarter-turns Pr20.1 [1-115]

168 Dish Pr20.1 [1-274]

169 Emergency Handle + Accessories for Pr20.1 [1-275]

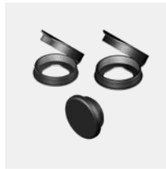
170 Dust Caps and Sealing Plug Pr20.1 [1-270]

171 Spring-Loaded Flap Lid Pr20.1 [1-270.02]

172 Finger Pull for Quarter-Turn Pr20.1 [1-270.01]

173 H-Dimension Adjustment [2-151.02]

173 H-Dimension Adjustment Stainless Steel [7-077.02]

174 Cams Height Adjustable L45 Stainless Steel [7-077]

175 2-, 3- and 4-Point Cam Adapter [2-151]

176 3-Point Cam Adapter [2-151.04]

177 3- and 4-Point Cam Adapter Stainless Steel [7-106.02]

178 3-Point Adapter with H-Dimension Adjustment [2-151.01]

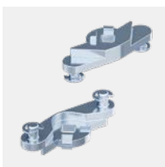
178 3-Point Cam Adapter 45° Zinc Die [2-151.03]

179 Round Rods with Eye [1-170]

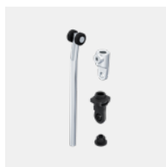
180 Round Rods for Adapter [1-180]

181 Adapter for Round Rods Ø8mm PA [1-181]

181 Adapter for Round Rods Ø8mm / Ø10mm Zinc Die [1-181.01]

Overview

182 Round Rods Stainless Steel [7-106]

183 Adapter for Round Rods Ø8mm Stainless Steel [7-106.03]

183 Rod Guide RS Height Adjustable Stainless Steel [7-912]

184 Rod Guide RS Height Adjustable [1-191]

185 Rod Guides RS [1-192]

186 Rod Guides RS [1-190]

187 Rod Guides RS [1-193]

188 Adapter and Spacer [1-263]

190 90° Redirect for Multi-Point Locking System [1-263.01]

192 Rod Latch for Quarter-Turns Pr20.1 L18 RS/FS [1-350]

194 Rod Latch with Quarter-Turn L12 Pr20.1 FS [1-351]

196 Dual Rod Guide FS/RS 18mm [3-904]

197 Dual Hook FS 18mm [3-905]

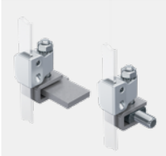

198 Pressure-Tight Fitting for 24mm Stroke FS [1-451]

200 Pressure-Tight Fitting for 18mm Stroke RS [1-450]

202 Pressure-Tight Fitting for 24mm Stroke RS [1-450.01]

204 3-Point Rod Latch RS [1-400]

206 2-Point Rod Latch RS [1-400.01]

207 2-Point Rod Latch RS [1-410]

208 Rod Latch for Profile Cylinder [1-405]

210 T- and L-Handles for Rod Latches [1-430]

212 Escutcheon and Inserts [1-430.01]

213 Slam Latch [1-300]

Compression Latch Pr20.1 L32 with H-Dimension Adjustment

See page 58

Quarter-Turn Pr14.1 L13.5

[1-050]

Advantages

- IP65 to DIN EN 60529 by using sealing kit (optional).
- RH / LH application.
- On request parts can be assembled.
- A pre-assembled quarter-turn can be installed in the cutout and combined with the finger pull of product system 1-060.
- Grounding by grounding nut or grounding clip.

Materials

- **Housing:** zinc die, chrome plated or black or PA, black

Remarks

With assembled cam - door thickness (S) max. 2mm

With unassambled cam - door thickness (S) max. 5mm

1. nut
2. grounding nut
3. grounding clip

When using finger pull (b) the H-dimension decreases by 0.8mm

Please configure the quarter-turn with insert and cam.

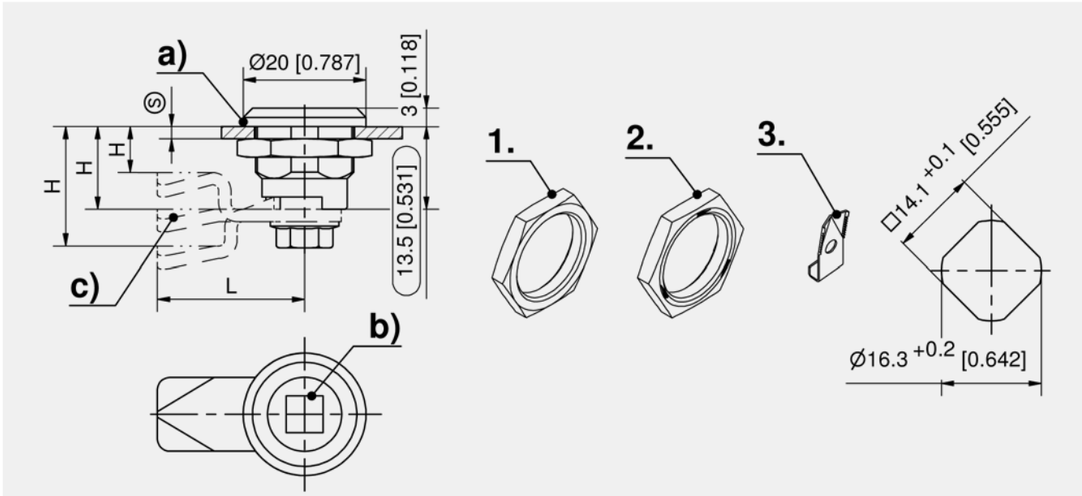

Quarter-Turn housing + nut

	Part Number	Material	Surface	Grounding type	Installation type	Delivery Unit
a)	220-9001.00-00000	zinc die	chrome plated		screw-on	10 pcs.
a)	220-9002.00-00000	zinc die	chrome plated	Grounding nut	screw-on	10 pcs.
a)	220-9005.00-00000	zinc die	chrome plated	Grounding clip	screw-on	10 pcs.
a)	220-9003.00-00000	zinc die	black		screw-on	10 pcs.
a)	220-9004.00-00000	zinc die	black	Grounding nut	screw-on	10 pcs.
a)	220-9006.00-00000	zinc die	black	Grounding clip	screw-on	10 pcs.
a)	220-9020.00-00000	PA	black		screw-on	10 pcs.
a)	220-9021.00-00000	PA	black	Grounding nut	screw-on	10 pcs.
a)	220-9022.00-00000	PA	black	Grounding clip	screw-on	10 pcs.

	Accessories
c) 149	1-058 **Cams for Quarter-Turn Pr14.1**
b) 148	1-059 **Finger Pull and Inserts for Quarter-Turn Pr14.1**
768	6-100 **Wrench**

	Assembly options
	220-0001.00-00000 **Assembling cam without o-ring**
	220-0002.00-00000 **Assembling cam with o-ring**
	220-0006.00-00000 **Assembling cam 90° to wing knob without o-ring**
	220-0007.00-00000 **Assembling cam 90° to wing with o-ring**

	Function extension
	209-9003.00-00000 **Sealing kit IP65 for Quarter-Turns Pr14.1**

1-050

◂ all product details on DIRAK.com

Quarter-Turn Pr14.1 L13.5 Stainless Steel

[7-050]

Advantages

- IP65 DIN EN 60529 by sealing kit (optional).
- RH / LH application.
- On request parts can be assembled by DIRAK.
- A pre-assembled quarter-turn can be installed in the cutout and combined with finger pull of product system 1-060.

Materials

- **Housing and insert :** AISI 316
- **Screw, serrated washer:** AISI 304
- **Wave washer and cam:** AISI 301

Remarks

With assembled cam - door thickness (S) max. 2mm

With unassambled cam - door thickness (S) max. 5mm

When using finger pull (f) the H-dimension decreases by 0.8mm

Please configure the quarter-turn with insert and cam.

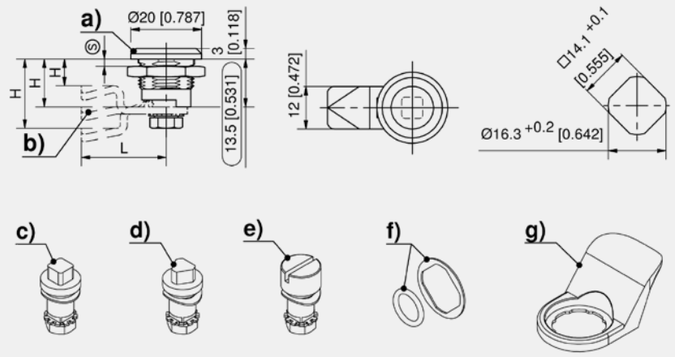

Quarter-Turn housing + nut

	Part Number	Housing length	Installation type	Delivery Unit
a)	220-9018.00-00000	13.5 mm	screw-on	1 pc.

Insert with screw, spring- and serrated washer

	Part Number	Insert	Delivery Unit
c)	220-9120.00-00000	Square 6mm	1 pc.
d)	220-9121.00-00000	Triangular 6.5mm	1 pc.
e)	220-9122.00-00000	Slotted 1,5x3mm	1 pc.

Cams L24, with stop

	Part Number	H-dimension	Delivery Unit
b)	220-0503.04-00000	7.5 mm	1 pc.
b)	220-0501.04-00000	13.5 mm	1 pc.
b)	220-0502.04-00000	19.5 mm	1 pc.

	Accessories
g) 148	220-1301.00-00000 **Finger pull**
768	6-100 **Wrench**

	Assembly options
	220-0001.00-00000 **Assembling cam without o-ring**
	220-0002.00-00000 **Assembling cam with o-ring**

	Function extension
f)	209-9003.00-00000 **Sealing kit IP65 for Quarter-Turns Pr14.1**

all product details ▸ on DIRAK.com

7-050

Quarter-Turn Pr14.1 L13.5

[1-057]

Advantages

- Quarter-turn clipped in.
- Tool-less installation.
- Secure fixation in the cutout with 2 clip-in noses.
- RH / LH application.
- A pre-assembled quarter-turn can be installed in the cutout.

Materials

- **Housing and insert :** PA, black
- **Hexagon head screw:** stainless steel

Remarks

(S) Door-thickness 0.8 to 1.5 mm

The quarter-turn can only be clipped into the cutout when it is open.

The 2 clip-in noses (refer to drawing) must be able to move inwards during installation.

Please configure the quarter-turn with a cam.

1. open position= delivery condition

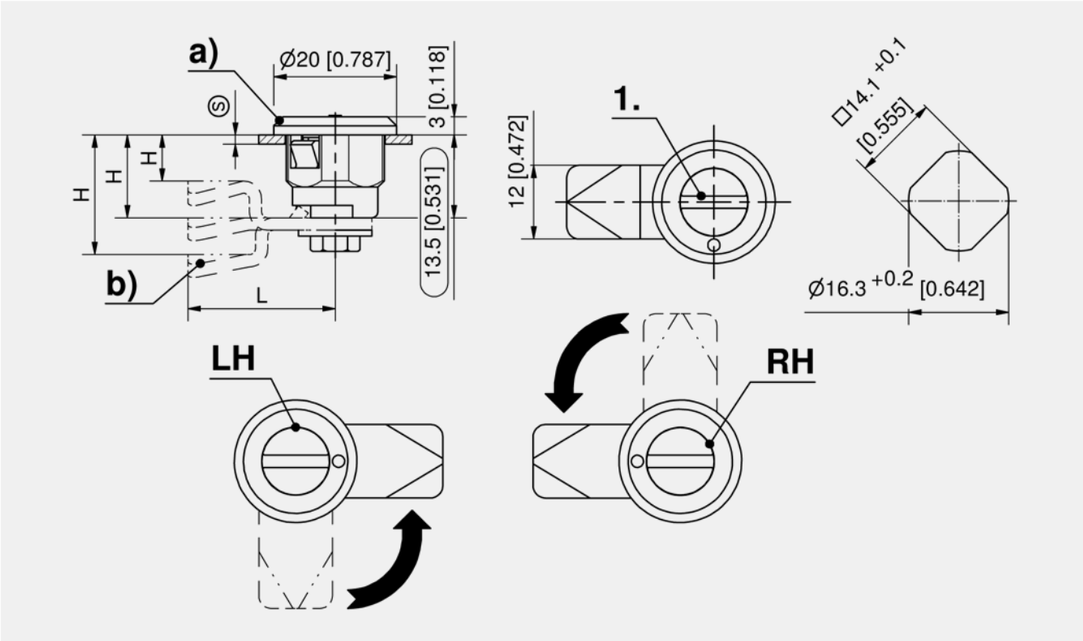

Quarter-Turn housing with insert

	Part Number	Insert	Housing length	Installation type	Delivery Unit
a)	220-9701.00-00000	Slotted 2x4mm	13.5 mm	tool-less	10 pcs.

Accessories

b) 149 1-058 **Cams for Quarter-Turn Pr14.1**

Assembly options

220-0008.00-00000 **Assembling (always in open condition)**

1-057

◂ all product details on DIRAK.com

Quarter-Turn with Wing Knob Pr14.1 L13.5

[1-056]

Advantages

- For cutout 14.1, housing length 13.5, with cylinder.
- RH / LH application.
- A pre-assembled quarter-turn can be installed in the cutout.
- All locks supplied with two keys.
- Grounding by grounding nut.

Materials

- **Wing knob and housing:** zinc die, black or chrome plated

Remarks

(S) Door-thickness max. 2.5mm

Please configure the quarter-turn with insert and cam.

1. flat external seal
2. grab-collar

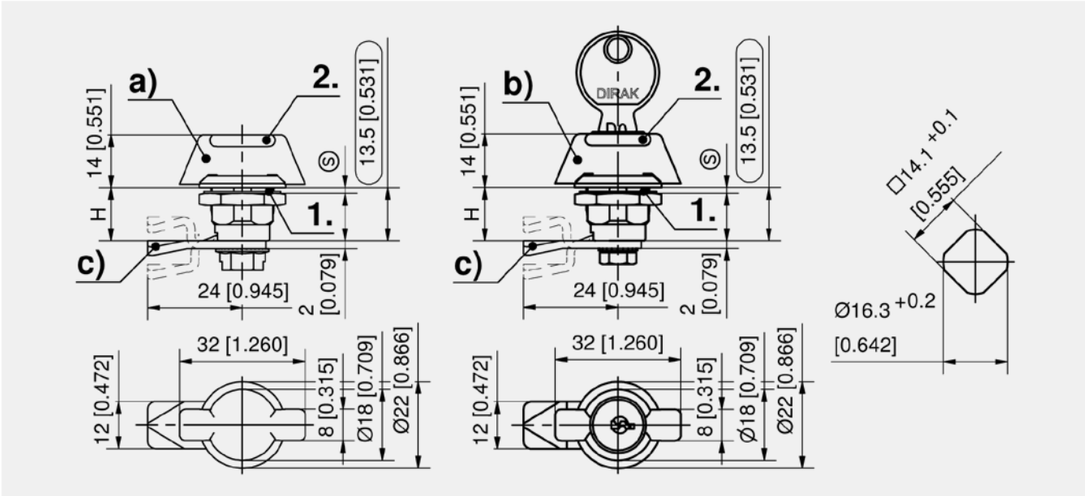

Quarter-Turn housing with knob

	Part Number	Latching type	Surface	Grounding type	Installation type	Delivery Unit
a)	220-9301.00-00000		chrome plated		screw-on	1 pc.
b)	220-9303.00-00000	keyed alike DIRAK 2233X	chrome plated		screw-on	1 pc.
b)	220-9305.00-00000	keyed different	chrome plated		screw-on	1 pc.
a)	220-9302.00-00000		chrome plated	Grounding nut	screw-on	1 pc.
b)	220-9304.00-00000	keyed alike DIRAK 2233X	chrome plated	Grounding nut	screw-on	1 pc.
b)	220-9306.00-00000	keyed different	chrome plated	Grounding nut	screw-on	1 pc.
a)	220-9307.00-00000		black		screw-on	1 pc.
b)	220-9309.00-00000	keyed alike DIRAK 2233X	black		screw-on	1 pc.
b)	220-9311.00-00000	keyed different	black		screw-on	1 pc.
a)	220-9308.00-00000		black	Grounding nut	screw-on	1 pc.
b)	220-9310.00-00000	keyed alike DIRAK 2233X	black	Grounding nut	screw-on	1 pc.
b)	220-9312.00-00000	keyed different	black	Grounding nut	screw-on	1 pc.

Accessories

c) 149 1-058 **Cams for Quarter-Turn Pr14.1**

Assembly options

220-0001.00-00000 **Assembling cam without o-ring**
220-0004.00-00000 **Assembling cam 90° to handle with o-ring**

all product details ▸ on DIRAK.com

1-056

Cylinder Quarter-Turn Pr14.1 L13.5

[1-053]

Advantages

- For cutout 14.1, housing length 13.5.
- With nut fixing.
- RH / LH application.
- A pre-assembled quarter-turn can be installed in the cutout.
- All locks supplied with two keys.
- Grounding by grounding nut.

Materials

- **Housing:** zinc die, chrome plated or black
- **Cylinder:** zinc die, chrome plated
- **Nut and cam:** steel, zinc plated

Remarks

With firmly riveted cam - door-thickness (S) max. 3mm

With unassembled cam - door-thickness (S) max. 5mm.

1. nut
2. grounding nut

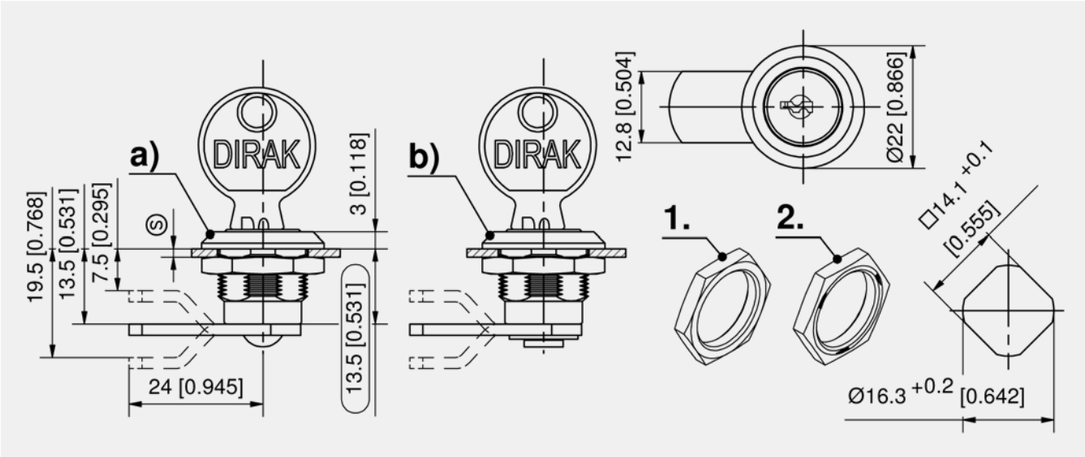

1-053

all product details on DIRAK.com

Cylinder quarter-turn, zinc die, cam riveted

	Part Number	Latching type	Surface	H-dimension	Installation type	Delivery Unit
a)	220-9207.00-00000	keyed alike DIRAK 2233X	chrome plated	7.5 mm	screw-on	1 pc.
a)	220-9208.00-00000	keyed alike DIRAK 2233X	chrome plated	13.5 mm	screw-on	1 pc.
a)	220-9209.00-00000	keyed alike DIRAK 2233X	chrome plated	19.5 mm	screw-on	1 pc.

Cylinder quarter-turn, cam fixed with c-clip

	Part Number	Latching type	Surface	H-dimension	Grounding type	Installation type	Delivery Unit
b)	220-9207.00-07200	keyed alike DIRAK 2233X	chrome plated	7.5 mm		screw-on	1 pc.
b)	220-9208.00-07200	keyed alike DIRAK 2233X	chrome plated	13.5 mm		screw-on	1 pc.
b)	220-9209.00-07200	keyed alike DIRAK 2233X	chrome plated	19.5 mm		screw-on	1 pc.
b)	220-9210.00-07200	keyed different	chrome plated	7.5 mm		screw-on	1 pc.
b)	220-9211.00-07200	keyed different	chrome plated	13.5 mm		screw-on	1 pc.
b)	220-9212.00-07200	keyed different	chrome plated	19.5 mm		screw-on	1 pc.
b)	220-9213.00-07200	keyed alike DIRAK 2233X	chrome plated	7.5 mm	Grounding nut	screw-on	1 pc.
b)	220-9214.00-07200	keyed alike DIRAK 2233X	chrome plated	13.5 mm	Grounding nut	screw-on	1 pc.
b)	220-9215.00-07200	keyed alike DIRAK 2233X	chrome plated	19.5 mm	Grounding nut	screw-on	1 pc.
b)	220-9216.00-07200	keyed different	chrome plated	7.5 mm	Grounding nut	screw-on	1 pc.
b)	220-9217.00-07200	keyed different	chrome plated	13.5 mm	Grounding nut	screw-on	1 pc.
b)	220-9218.00-07200	keyed different	chrome plated	19.5 mm	Grounding nut	screw-on	1 pc.
b)	220-9220.00-07200	keyed alike DIRAK 2233X	black	7.5 mm		screw-on	1 pc.
b)	220-9221.00-07200	keyed alike DIRAK 2233X	black	13.5 mm		screw-on	1 pc.
b)	220-9222.00-07200	keyed alike DIRAK 2233X	black	19.5 mm		screw-on	1 pc.
b)	220-9223.00-07200	keyed different	black	7.5 mm		screw-on	1 pc.
b)	220-9224.00-07200	keyed different	black	13.5 mm		screw-on	1 pc.
b)	220-9225.00-07200	keyed different	black	19.5 mm		screw-on	1 pc.

	Accessories
149	220-20LL.00-Hxxmm **Cam, variable**

Quarter-Turn L13.5 with Fixing Clip

[1-048]

IP 54

RoHS WEEE

Advantages

- Max. IP54.
- RH / LH application.
- On request parts can be assembled by DIRAK.
- A pre-assembled quarter-turn can be installed in the cutout.
- Grounding by grounding nut.

Materials

- **Housing:** PA, black or zinc die, chrome plated
- **Fixing clip:** steel, zinc plated
- **Grounding clip:** stainless steel

Remarks

(S) Door-thickness max. 2.2mm

On LH doors the opening direction is clockwise.

Please configure the quarter-turn with insert and cam.

1. fixing clip
2. grounding clip

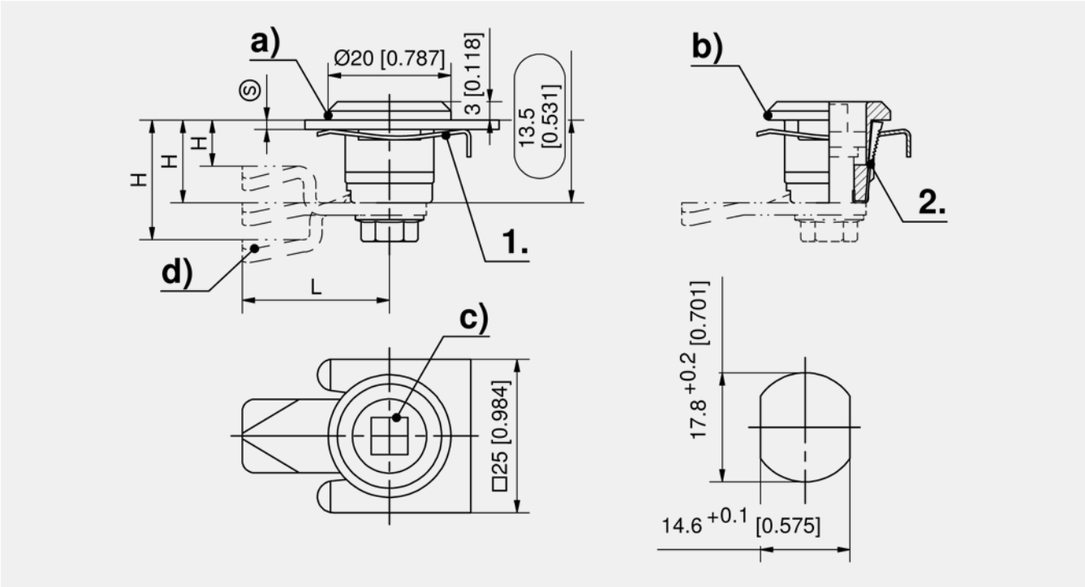

Quarter-Turn housing

	Part Number	Material	Surface	Grounding type	Installation type	Delivery Unit
a)	220-9013.00-00000	zinc die	chrome plated		tool-less	10 pcs.
b)	220-9007.00-00000	zinc die	chrome plated	Grounding clip	tool-less	10 pcs.
a)	220-9501.00-00000	PA	black		tool-less	10 pcs.
b)	220-9503.00-00000	PA	black	Grounding clip	tool-less	10 pcs.

	Accessories
c)	148 1-059 **Finger Pull and Inserts for Quarter-Turn Pr14.1**
d)	149 1-058 **Cams for Quarter-Turn Pr14.1**
	768 6-100 **Wrench**

Assembly options
220-0006.00-00000 **Assembling cam 90° to wing knob without o-ring**
220-0001.00-00000 **Assembling cam without o-ring**

all product details on DIRAK.com
1-048

Cylinder Quarter-Turn L13.5 with Fixing Clip

[1-054]

RoHS WEEE

Advantages

- PA-version is electrically insulated.
- RH / LH application.
- A pre-assembled quarter-turn can be installed in the cutout.
- All locks supplied with two keys.

Materials

- **Housing and cylinder:** PA, black or zinc die, chrome plated
- **Fixing clip and cam:** steel, zinc plated

Remarks

(S) Door-thickness max. 2.2mm

1. fixing clip

Please note the cutout!

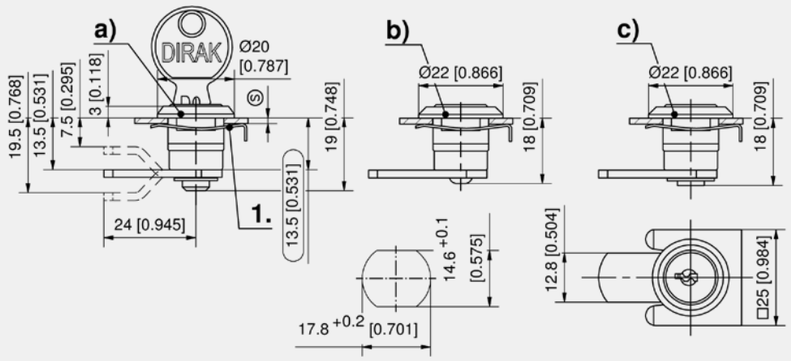

Cylinder quarter-turn, cam with fixing clip

	Part Number	Construction depth	Latching type	H-dimension	Material	Surface	Installation type	Delivery Unit
a)	220-9601.00-00000	19 mm	keyed alike DIRAK 2233X	7.5 mm	PA	black	tool-less	1 pc.
a)	220-9602.00-00000	19 mm	keyed alike DIRAK 2233X	13.5 mm	PA	black	tool-less	1 pc.
a)	220-9603.00-00000	19 mm	keyed alike DIRAK 2233X	19.5 mm	PA	black	tool-less	1 pc.
a)	220-9604.00-00000	19 mm	keyed different	7.5 mm	PA	black	tool-less	1 pc.
a)	220-9605.00-00000	19 mm	keyed different	13.5 mm	PA	black	tool-less	1 pc.
a)	220-9606.00-00000	19 mm	keyed different	19.5 mm	PA	black	tool-less	1 pc.
c)	220-9201.00-07200	18 mm	keyed alike DIRAK 2233X	7.5 mm	zinc die	chrome plated	tool-less	1 pc.
c)	220-9202.00-07200	18 mm	keyed alike DIRAK 2233X	13.5 mm	zinc die	chrome plated	tool-less	1 pc.
c)	220-9203.00-07200	18 mm	keyed alike DIRAK 2233X	19.5 mm	zinc die	chrome plated	tool-less	1 pc.
c)	220-9204.00-07200	18 mm	keyed different	7.5 mm	zinc die	chrome plated	tool-less	1 pc.
c)	220-9205.00-07200	18 mm	keyed different	13.5 mm	zinc die	chrome plated	tool-less	1 pc.
c)	220-9206.00-07200	18 mm	keyed different	19.5 mm	zinc die	chrome plated	tool-less	1 pc.

Cylinder quarter-turn, cam revited

	Part Number	Construction depth	Latching type	H-dimension	Material	Surface	Installation type	Delivery Unit
b)	220-9201.00-00000	18 mm	keyed alike DIRAK 2233X	7.5 mm	zinc die	chrome plated	tool-less	1 pc.
b)	220-9202.00-00000	18 mm	keyed alike DIRAK 2233X	13.5 mm	zinc die	chrome plated	tool-less	1 pc.
b)	220-9203.00-00000	18 mm	keyed alike DIRAK 2233X	19.5 mm	zinc die	chrome plated	tool-less	1 pc.
b)	220-9204.00-00000	18 mm	keyed different	7.5 mm	zinc die	chrome plated	tool-less	1 pc.
b)	220-9205.00-00000	18 mm	keyed different	13.5 mm	zinc die	chrome plated	tool-less	1 pc.
b)	220-9206.00-00000	18 mm	keyed different	19.5 mm	zinc die	chrome plated	tool-less	1 pc.

Accessories
149 1-058 **Cams for Quarter-Turn Pr14.1**

all product details on DIRAK.com
1-054

Compression Latch Pr14.1

[1-045]

14

DIN 61373

R L

IP 65

5 Nm

RoHS WEEE

Advantages

- 4.5mm compression.
- The closing process is always clockwise.
- By turning the insert 90° the cam is first put into closed position, by turning an additional 90°, the cam will be pulled towards the frame.
- The H-dimension can be easily adjusted by the adjusting screw.
- Vibration-proof according to DIN EN 61373.
- IP65 according to DIN EN 60529.
- RH / LH application.
- A pre-assembled quarter-turn can be fitted through the cutout.

Materials

- **Housing, insert shaft and cam:** zinc die, black
- **T-handle:** PA, black
- **Adjusting screw and nut:** steel, zinc plated

Remarks

(S) Door-thickness max. 12mm

1. adjusting screw

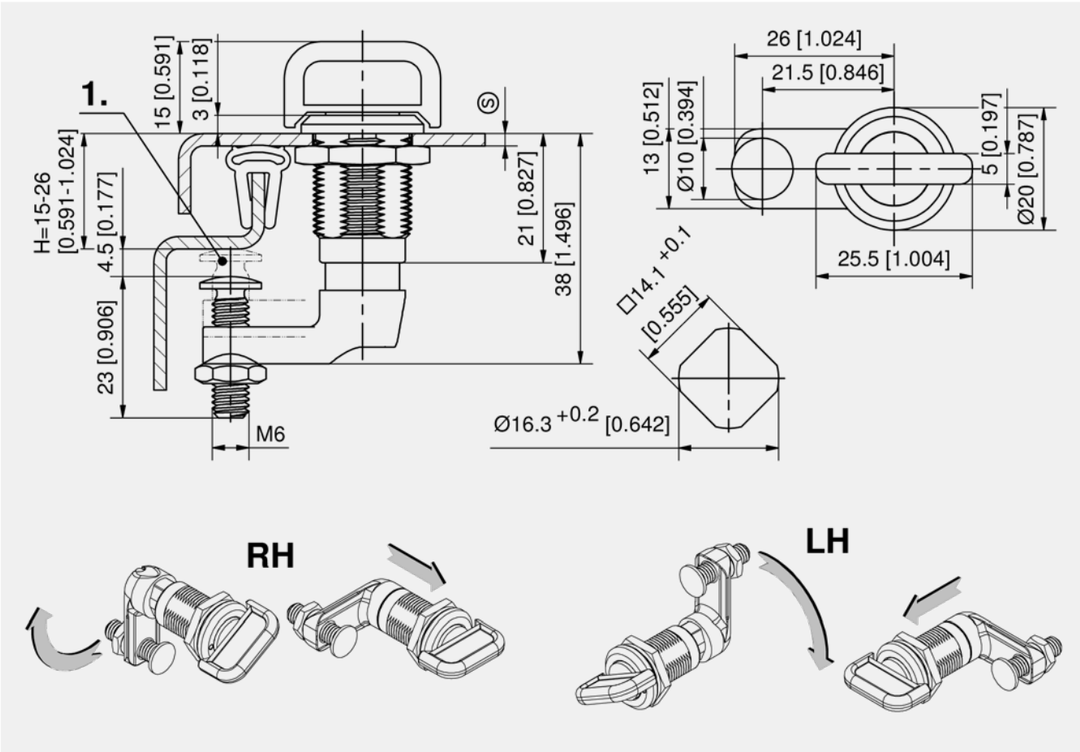

Compression latch

Part Number	Insert	variable H-dimension	Construction depth	Installation type	Delivery Unit
220-9313.00-00000	Wing knob	15 - 26 mm	38 mm	screw-on	1 pc.
220-9317.00-00000	Slotted 2x4mm	15 - 26 mm	38 mm	screw-on	1 pc.
220-9318.00-00000	Socket hex.4mm	15 - 26 mm	38 mm	screw-on	1 pc.

1-045

all product details on DIRAK.com

Compression Latch Pr20.1 L22/32

See page 60

Compression Latch Pr19.1

[1-067]

DIN 61373

IP 65/67

15 Nm

RoHS WEEE

Advantages

- Compression 7mm.
- Housing with marking.
- Vibration-proof according to DIN EN 61373.
- IP65/67 according to DIN EN 60529.
- H-dimension variably adjustable from 39.5mm to 56mm by included straight cam.
- H-dimension variably adjustable from 12mm to 83.5mm by cams x) or y).

Materials

- **Housing and insert:** zinc die, black
- **Nut for attachment of the housing:** zinc die
- **Serrated washer, nut and square threaded rod:** steel, zinc plated

Remarks

(S) Door-thickness max. 18 mm

Inserts j) and k) (see drawing) on request.

1. NOT for IP65
2. open

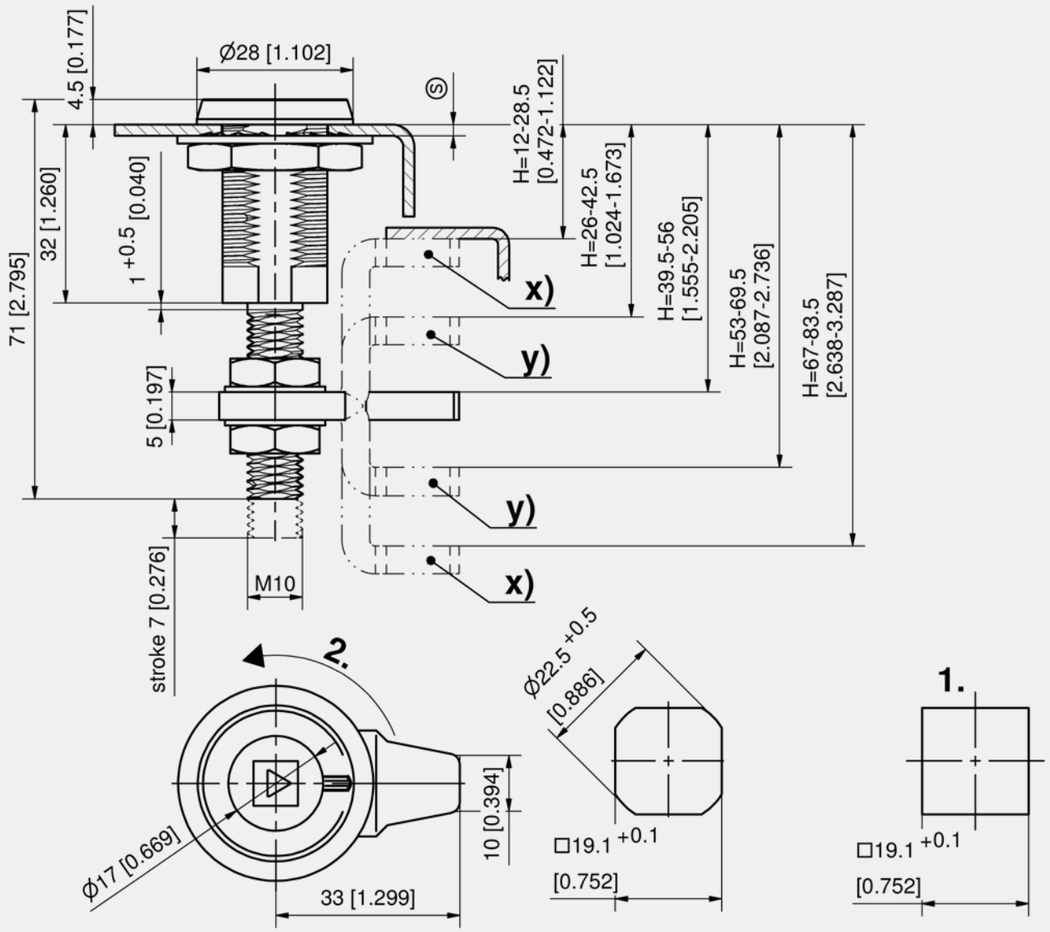

1-067

all product details on DIRAK.com

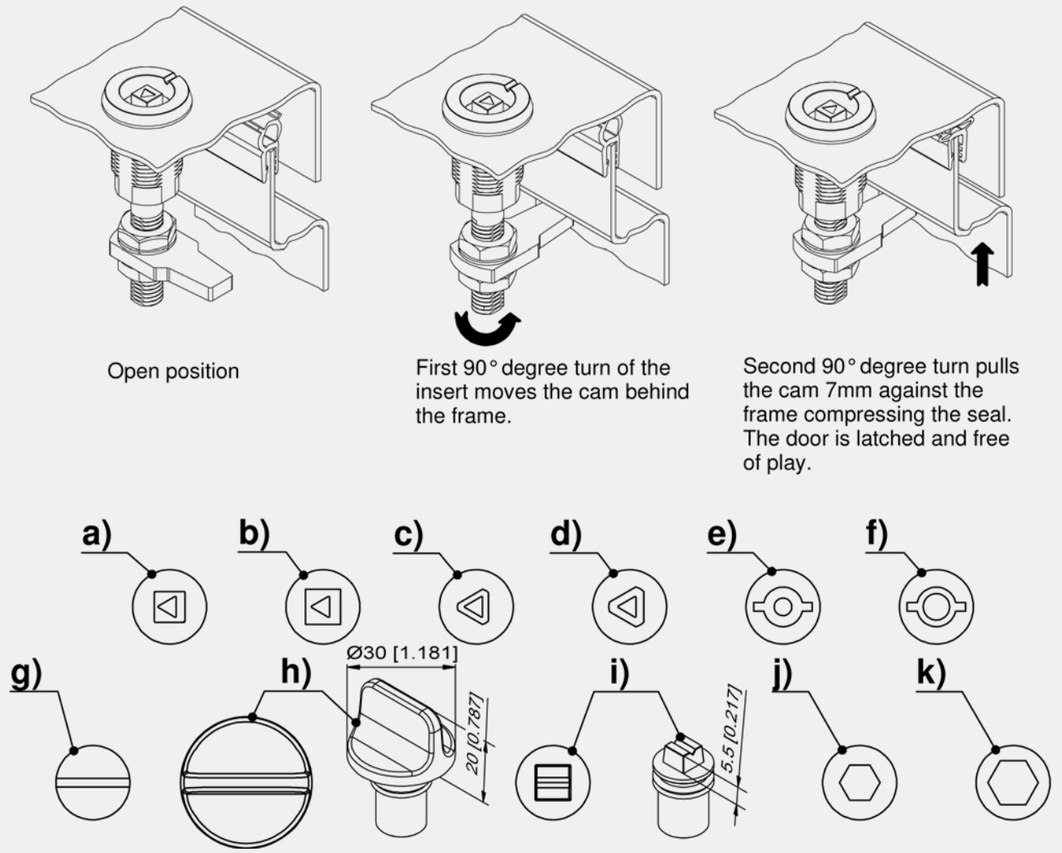

Compression latch with insert, version LH, closing right

	Part Number	Insert	Delivery Unit
a)	248-9752.00-00001	Square 7mm	25 pcs.
b)	248-9752.00-00002	Square 8mm	25 pcs.
c)	248-9752.00-00003	Triangular 7mm	25 pcs.
d)	248-9752.00-00004	Triangular 8mm	25 pcs.
e)	248-9752.00-00005	Double bit 3mm pin	25 pcs.
f)	248-9752.00-00006	Double bit 5mm pin	25 pcs.
g)	248-9752.00-00007	Slotted 2x4mm	25 pcs.
h)	248-9752.00-00010	Wing knob	25 pcs.
i)	248-9752.00-00019	Conical square 9mm	25 pcs.

Cam, L33

	Part Number	Bending	variable H-dimension negative	variable H-dimension positive	Delivery Unit
x)	248-0602.15-00275	27.5 mm	12 - 28.5 mm	67 - 83.5 mm	25 pcs.
y)	248-0602.15-00135	13.5 mm	26 - 42.5 mm	53 - 69.5 mm	25 pcs.

	Accessories
768	6-100 **Wrench**
766	6-101 **Universal key**

Safety Quarter-Turn Pr20.1 L18

[1-085.01]

20 | DIN 61373 | R L | IP 65 | M6 4Nm | RoHS WEEE

Advantages

- Flush safety quarter-turn for cutout Pr20.1.
- Completely closed housing surface.
- Vibration-proof according to DIN EN 61373 also at high sealing pressure, by built-in spring loaded link.
- IP65 according to DIN EN 60529.
- RH / LH application.
- Grounding by single-sided grounding nut.
- The quarter-turn can be screwed into the cutout with the pre-assembled cam.

Materials

- **Housing, insert and spring loaded link:** zinc die, matte chrome plated
- **O-ring and flat external seal:** NBR Perbunan, black
- **Nut and grounding nut:** zinc die, untreated
- **Serrated lock washer:** steel, zinc plated

Remarks

(S) Door-thickness max. 8mm

Completely pre-assembled **without** cam.

1. spring loaded link
2. housing
3. serrated lock washer
4. flush, closed surface

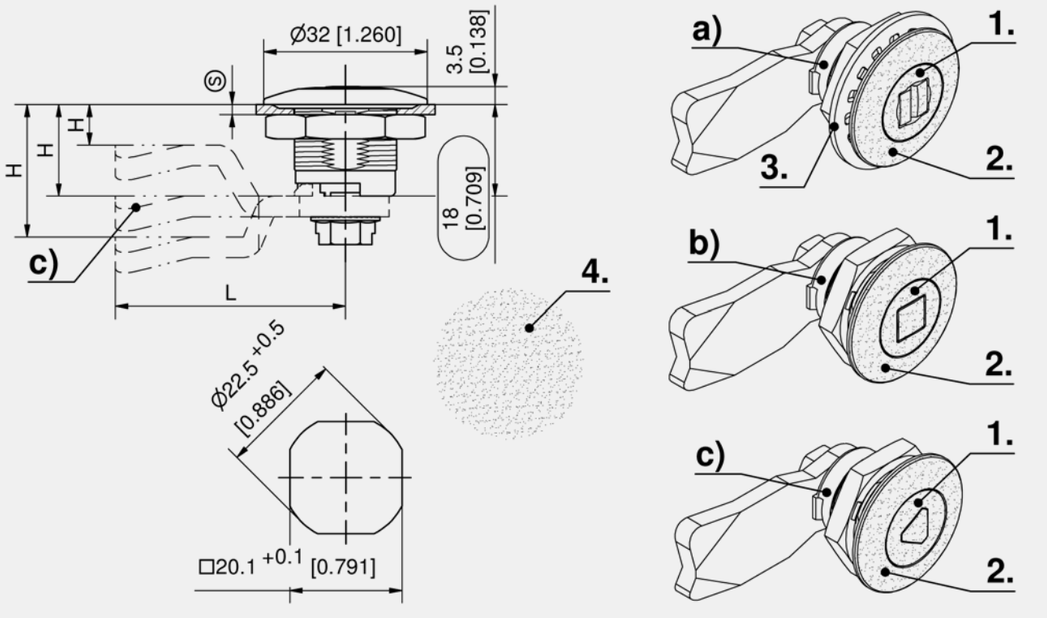

Safety quarter-turn with insert

	Part Number	Version	Insert	Installation type	Delivery Unit
a)	255-9812.00-00000	with serrated lock washer	Conical square 9mm	screw-on	10 pcs.
b)	255-9813.00-00000		Square 8mm	screw-on	10 pcs.
c)	255-9814.00-00000		Triangular 8mm	screw-on	10 pcs.

	Accessories
d)	154, 292 1-102 **Cams L35/45 Steel**
d)	161 1-262 **Cams variable**
	768 6-100 **Wrench**
	766 6-101 **Universal key**
	770 6-105 **Keys for the Railway Sector**

1-085.01
◂ all product details on DIRAK.com

Safety Quarter-Turn Pr20.1 L18 Stainless Steel

[7-074]

Advantages

- Flat version.
- Fully closed external surface.
- Vibration-proof also at high sealing pressure.
- IP65 according to DIN EN 60529.
- RH / LH application.
- A pre-assembled quarter-turn can be inserted through the cutout.

Materials

- **Housing, insert, spring loaded link and nut:** AISI 316L
- **O-ring and flat external seal:** NBR Perbunan

Remarks

(S) Door-thickness max. 8mm

Attention: an assembled cam will have some axial play on the insert. This play is necessary to neutralize tipping of the insert at high compression forces. This tipping will squeeze the spring loaded link.

1. flat external seal
2. serrated screw
3. spring loaded link
4. closed surface

Completely assembled **without** cam.

20 | R L | IP 65 | 15 Nm | RoHS WEEE

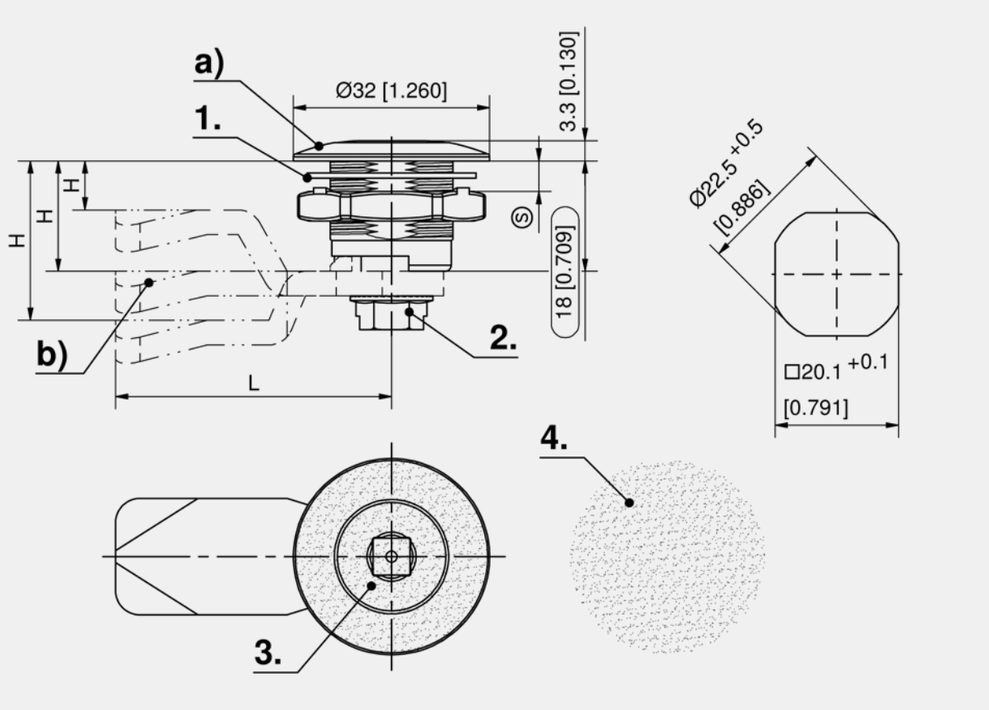

Safety quarter-turn with insert

	Part Number	Insert	Installation type	Delivery Unit
a)	255-9427.00-00000	Square 6mm	screw-on	1 pc.

	Accessories
b)	156 7-105 **Cams L35/45 Stainless Steel**
	768 6-100 **Wrench**

all product details ▸ on DIRAK.com
7-074

Safety Quarter-Turn Pr20.1 L18

[1-085]

20

R L

IP 65

15 Nm

RoHS WEEE

Advantages

- For cutout Pr20.1.
- Completely closed housing surface.
- Operation not possible without an appropriate key. (only keys form A, B, C or D of 6-100).
- The double bit key is captive in open position, pull-off force max. 300N.
- Vibration-proof also at high sealing pressure through an integrated latch.
- IP65 according to DIN EN 60529.
- RH / LH application.
- Grounding by single-sided grounding nut.
- The quarter-turn can be screwed into the cutout with the pre-assembled cam.

Materials

- **Housing:** zinc die, black or chrome plated
- **Spring loaded link, escutcheon and insert:** zinc die, chrome plated

Remarks

(S) Door-thickness max. 8mm

Completely pre-assembled **without** cam.

Attention! Also the black version always has the spring loaded link, escutcheon and insert in chrome plated.

1. single-sided grounding nut
2. escutcheon
3. spring loaded link
4. flush, closed surface

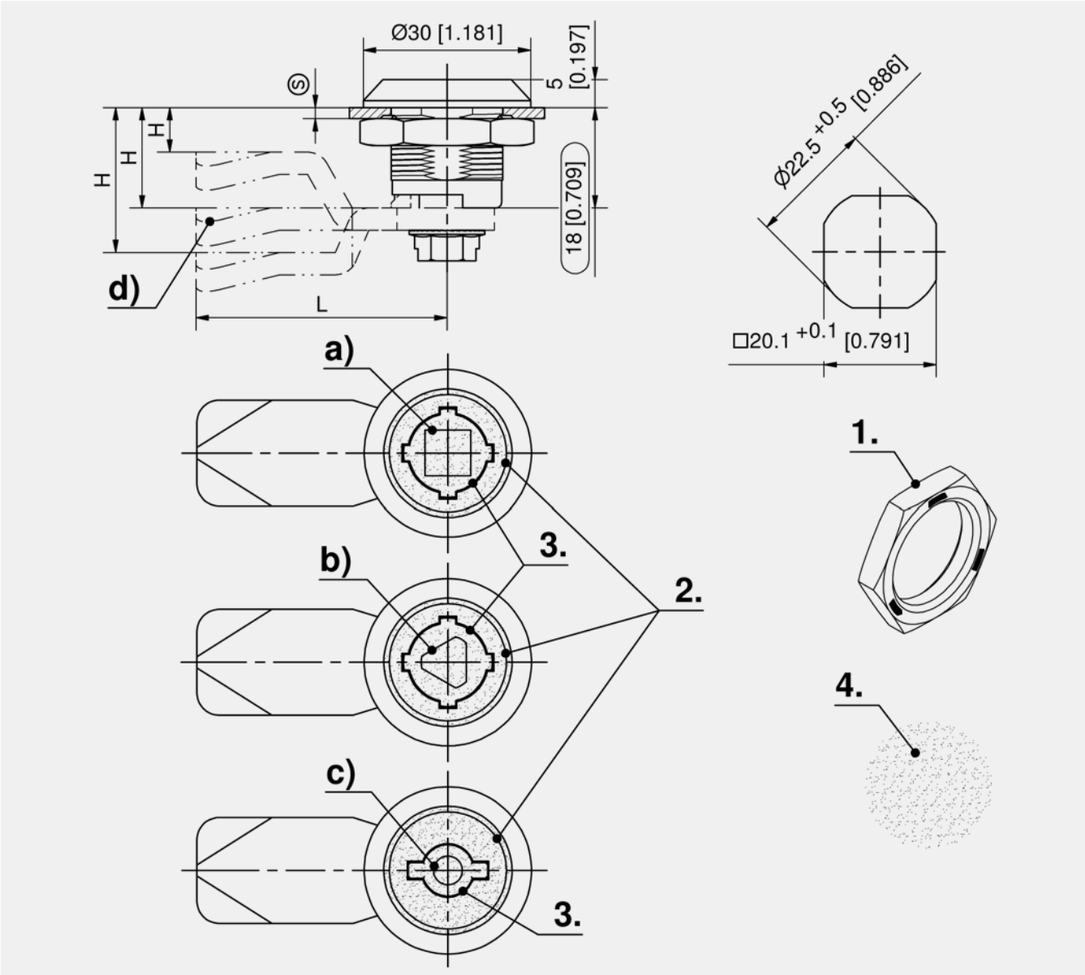

1-085

all product details on DIRAK.com

Safety quarter-turn, zinc die

	Part Number	Surface	Version	Insert	Installation type	Delivery Unit
a)	255-9801.00-00000	chrome plated	RH / LH	Square 6mm	screw-on	10 pcs.
a)	255-9802.00-00000	chrome plated	RH / LH	Square 7mm	screw-on	10 pcs.
a)	255-9803.00-00000	chrome plated	RH / LH	Square 8mm	screw-on	10 pcs.
b)	255-9806.00-00000	chrome plated	RH / LH	Triangular 6.5mm CNOMO	screw-on	10 pcs.
b)	255-9804.00-00000	chrome plated	RH / LH	Triangular 7mm	screw-on	10 pcs.
b)	255-9805.00-00000	chrome plated	RH / LH	Triangular 8mm	screw-on	10 pcs.
c)	255-9807.00-00000	chrome plated	RH version	Double bit 3mm pin	screw-on	10 pcs.
c)	255-9808.00-00000	chrome plated	LH version	Double bit 3mm pin	screw-on	10 pcs.
c)	255-9809.00-00000	chrome plated	RH version	Double bit 5mm pin	screw-on	10 pcs.
c)	255-9810.00-00000	chrome plated	LH version	Double bit 5mm pin	screw-on	10 pcs.
a)	255-9851.00-00000	black	RH / LH	Square 6mm	screw-on	10 pcs.
a)	255-9852.00-00000	black	RH / LH	Square 7mm	screw-on	10 pcs.
a)	255-9853.00-00000	black	RH / LH	Square 8mm	screw-on	10 pcs.
b)	255-9854.00-00000	black	RH / LH	Triangular 7mm	screw-on	10 pcs.
b)	255-9855.00-00000	black	RH / LH	Triangular 8mm	screw-on	10 pcs.
b)	255-9856.00-00000	black	RH / LH	Triangular 6.5mm CNOMO	screw-on	10 pcs.
c)	255-9857.00-00000	black	RH version	Double bit 3mm pin	screw-on	10 pcs.
c)	255-9858.00-00000	black	LH version	Double bit 3mm pin	screw-on	10 pcs.
c)	255-9859.00-00000	black	RH version	Double bit 5mm pin	screw-on	10 pcs.
c)	255-9860.00-00000	black	LH version	Double bit 5mm pin	screw-on	10 pcs.

Accessories

d) 154, 292 1-102 **Cams L35/45 Steel**
d) 161 1-262 **Cams variable**
768 6-100 **Wrench**
766 6-101 **Universal key**

Assembly options

200-0001.00-00000 **Assembling cam without o-ring**

DST Safety Quarter-Turn Pr32x20 L18 [1-085DST]

Advantages

- Flush safety quarter-turn for cutout 32x20mm.
- Rectangular cutout guarantees a perfect alignment.
- Completely closed housing surface.
- The double bit key is captive in open position according to DIN 43668. Pull-off force max. 300N.
- Vibration-proof also at high sealing pressure through an integrated latch.
- IP65 according to DIN EN 60529.
- RH / LH application.
- Grounding by grounding clip (optional).
- The quarter-turn can be snapped-in as a completely pre-assembled unit.
- Blind installation in closed profiles.

Materials

- **Housing, insert, spring loaded link and escutcheon:** zinc die, chrome plated
- **Snap wedges:** sintered steel
- **O-ring:** NBR, black
- **Serrated screw:** steel, zinc plated

Remarks

ATTENTION: H-dimension of the cam not less than 12mm!

1. spring loaded link
2. escutcheon
3. flush, closed surface

Completely pre-assembled **without** cam.

Operation not possible without an appropriate key. (only keys form A, B, C or D of 6-100).

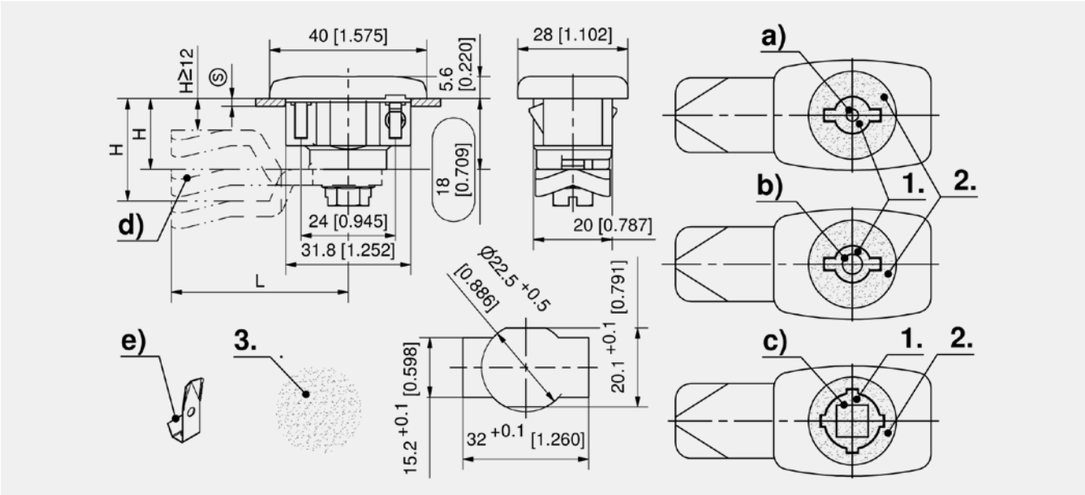

Safety quarter-turn with insert

	Part Number	Insert	Clamping range (S)	Installation type	Delivery Unit
a)	455-9001.00-00013	Double bit 3mm pin	1.0 - 1.7 mm	tool-less	10 pcs.
a)	455-9001.00-00018	Double bit 3mm pin	1.5 - 2.2 mm	tool-less	10 pcs.
a)	455-9001.00-00026	Double bit 3mm pin	2.3 - 3.0 mm	tool-less	10 pcs.
b)	455-9002.00-00013	Double bit 5mm pin	1.0 - 1.7 mm	tool-less	10 pcs.
b)	455-9002.00-00018	Double bit 5mm pin	1.5 - 2.2 mm	tool-less	10 pcs.
b)	455-9002.00-00026	Double bit 5mm pin	2.3 - 3.0 mm	tool-less	10 pcs.
c)	455-9004.00-00013	Square 8mm	1.0 - 1.7 mm	tool-less	10 pcs.
c)	455-9004.00-00018	Square 8mm	1.5 - 2.2 mm	tool-less	10 pcs.
c)	455-9004.00-00026	Square 8mm	2.3 - 3.0 mm	tool-less	10 pcs.

Accessories
d) 154, 292 1-102 **Cams L35/45 Steel**
d) 161 1-262 **Cams variable**
d) 175, 295 2-151 **2-, 3- and 4-Point Cam Adapter**
768 6-100 **Wrench**
766 6-101 **Universal key**

Function extension
e) 200-1101.04-00000 **Grounding clip**

1-085DST
all product details on DIRAK.com

Safety Quarter-Turn Pr20.1 L18 Stainless Steel [7-075]

Advantages

- Safety quarter-turn, vibration-proof also at high sealing pressure through an integrated latch.
- Completely closed surface.
- Closing rotation 90°.
- IP65 according to DIN EN 60529.
- RH / LH application.
- Grounding by single grounding nut.
- The quarter-turn can be screwed into the cutout with the pre-assembled cam.
- The double bit key is captive in open position according to DIN 43668, pull-off force max. 300N

Materials

- **Housing, insert, escutcheon and spring loaded link:** AISI 316
- **Pin:** AISI 303
- **O-ring:** NBR

Remarks

(S) Door-thickness max. 8mm

Completely pre-assembled **without** cam.

1. escutcheon
2. spring loaded link
3. flush, closed surface
4. position cam in the direction of marking

Operation not possible without an appropriate key (only keys form A, B, C or D of 6-100).

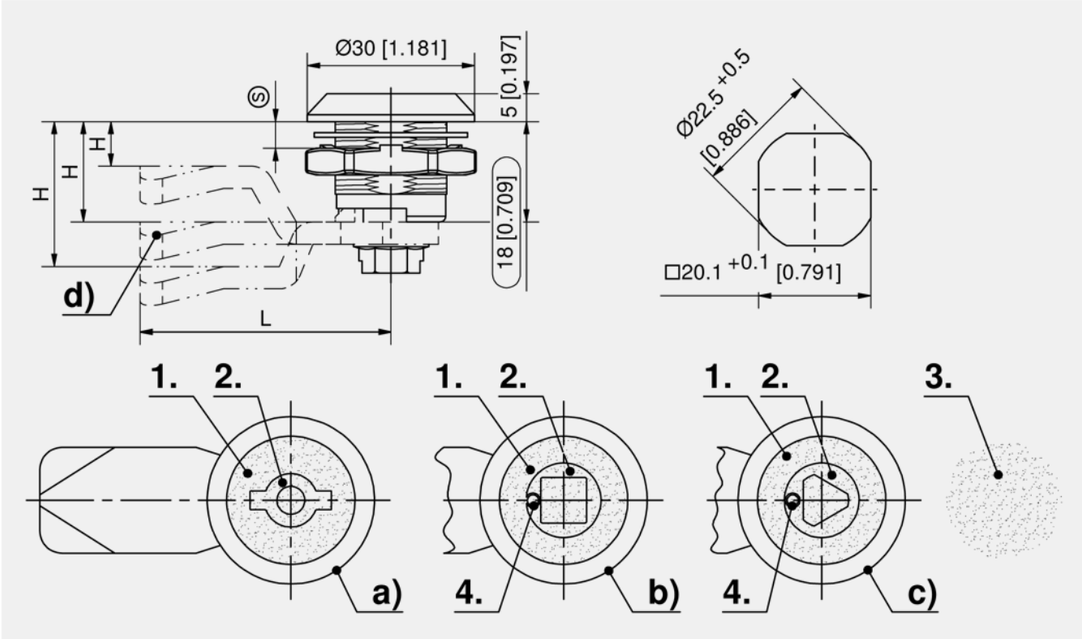

Safety quarter-turn with insert

	Part Number	Version	Insert	Installation type	Delivery Unit
a)	255-9429.00-00000	RH version	Double bit 3mm pin	screw-on	1 pc.
a)	255-9430.00-00000	LH version	Double bit 3mm pin	screw-on	1 pc.
a)	255-9409.00-00000	RH version	Double bit 5mm pin	screw-on	1 pc.
a)	255-9410.00-00000	LH version	Double bit 5mm pin	screw-on	1 pc.
b)	255-9402.00-00000	RH / LH	Square 7mm	screw-on	1 pc.
b)	255-9403.00-00000	RH / LH	Square 8mm	screw-on	1 pc.
c)	255-9405.00-00000	RH / LH	Triangular 8mm	screw-on	1 pc.

Accessories
d) 161 1-262 **Cams variable**
d) 156 7-105 **Cams L35/45 Stainless Steel**
768 6-100 **Wrench**
766 6-101 **Universal key**

Assembly options
200-0001.00-00000 **Assembling cam without o-ring**

all product details on DIRAK.com
7-075

Quarter-Turn Pr.20.1 L18 with FIAT Insert [1-086]

Advantages

- For cutout Pr20.1.
- Operation not possible without an appropriate key.
- The key is removable in 90° steps.
- IP65 according to DIN EN 60529.
- RH / LH application.
- Grounding by grounding nut.
- The quarter-turn can be screwed into the cutout with the pre-assembled cam.

Materials

- **Housing:** zinc die, chrome plated or black
- **Insert and escutcheon:** zinc die, chrome plated
- **Grounding nut:** zinc die
- **O-ring and flat external seal:** NBR/Perbunan, black
- **Serrated screw:** steel, zinc plated

Remarks

(S) Door-thickness max. 8mm

Completely pre-assembled **without** cam.

1. escutcheon
2. grounding nut

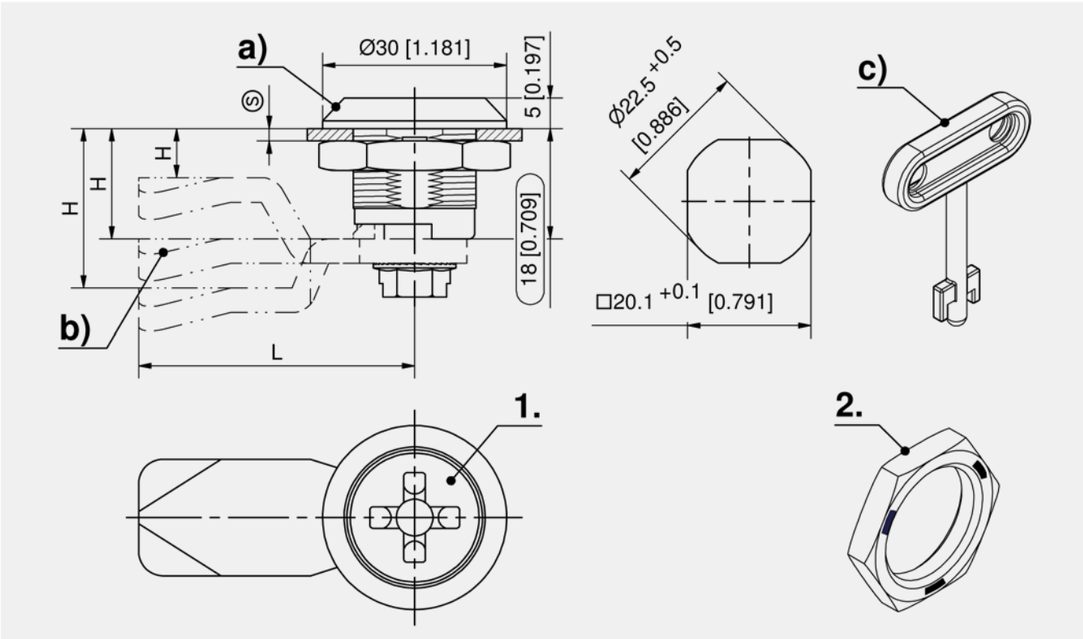

Quarter-Turn with FIAT insert

	Part Number	Surface	Installation type	Delivery Unit
a)	255-9811.00-00000	chrome plated	screw-on	10 pcs.
a)	255-9861.00-00000	black	screw-on	10 pcs.

Accessories
b) 154, 292 1-102 **Cams L35/45 Steel**
b) 161 1-262 **Cams variable**
b) 175, 295 2-151 **2-, 3- and 4-Point Cam Adapter**

Specific accessories
c) 769 204-0302.42-00000 **FIAT key**

all product details on DIRAK.com
1-086

DST Quarter-Turn Pr32x20 L18 with FIAT Insert [1-086DST]

Advantages

- Flush quarter-turn for cutout 32x20mm.
- Rectangular cutout guarantees a perfect alignment.
- Operation not possible without an appropriate key.
- The key is removable in 90° steps.
- IP65 according to DIN EN 60529.
- RH / LH application.
- Grounding by grounding clip (optional).
- The quarter-turn can be snapped-in as a completely pre-assembled unit.
- Installation tool-less and vibration-proof.
- Blind installation in closed profiles.

Materials

- **Housing, insert and escutcheon:** zinc die, chrome plated
- **Snap wedges:** sintered steel
- **O-ring:** NBR, black
- **Serrated screw:** steel, zinc plated

Remarks

ATTENTION: H-dimension of the cam not less than 12mm

Completely pre-assembled **without** cam.

1. escutcheon
2. o-ring

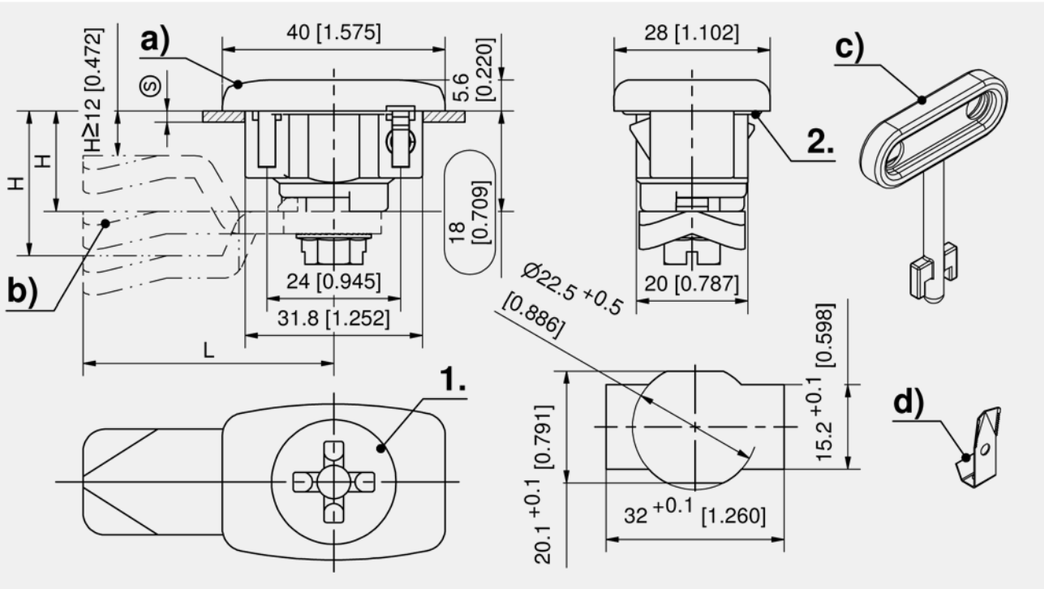

Quarter-Turn with FIAT insert

	Part Number	Clamping range (S)	Installation type	Delivery Unit
a)	455-9003.00-00013	1.0 - 1.7 mm	tool-less	10 pcs.
a)	455-9003.00-00018	1.5 - 2.2 mm	tool-less	10 pcs.
a)	455-9003.00-00026	2.3 - 3.0 mm	tool-less	10 pcs.

Accessories
b) 154, 292 1-102 **Cams L35/45 Steel**
b) 161 1-262 **Cams variable**
b) 175, 295 2-151 **2-, 3- and 4-Point Cam Adapter**

Function extension
d) 200-1101.04-00000 **Grounding clip**

Specific accessories
c) 769 204-0302.42-00000 **FIAT key**

all product details on DIRAK.com
1-086DST

Compression Latch Pr20.1

[1-070]

20

DIN 61373

R L

RoHS WEEE

Advantages

- For application outside sealed area.
- Compression 4.5mm.
- Matching dots mark the final position (see lower drawing).
- The double function is especially beneficial for pressurized enclosures. After the first 90° opening turn, the pressure can escape because the door is still latched.
- Vibration-proof according to DIN EN 61373.
- RH / LH application.

Materials

- **Housing, insert, cam, frame-part and base plate:** zinc die, black
- **Fixing clip:** spring steel, zinc plated

Remarks

(S) Door-thickness 1.5 to 2.2mm

1. close the door

2. first 90° rotation: the cam latches behind the frame into the locked position. The door cannot be opened.

3. a further 90° rotation will pull the already latched cam towards the frame: the seal is compressed, the door is latched and free of play.

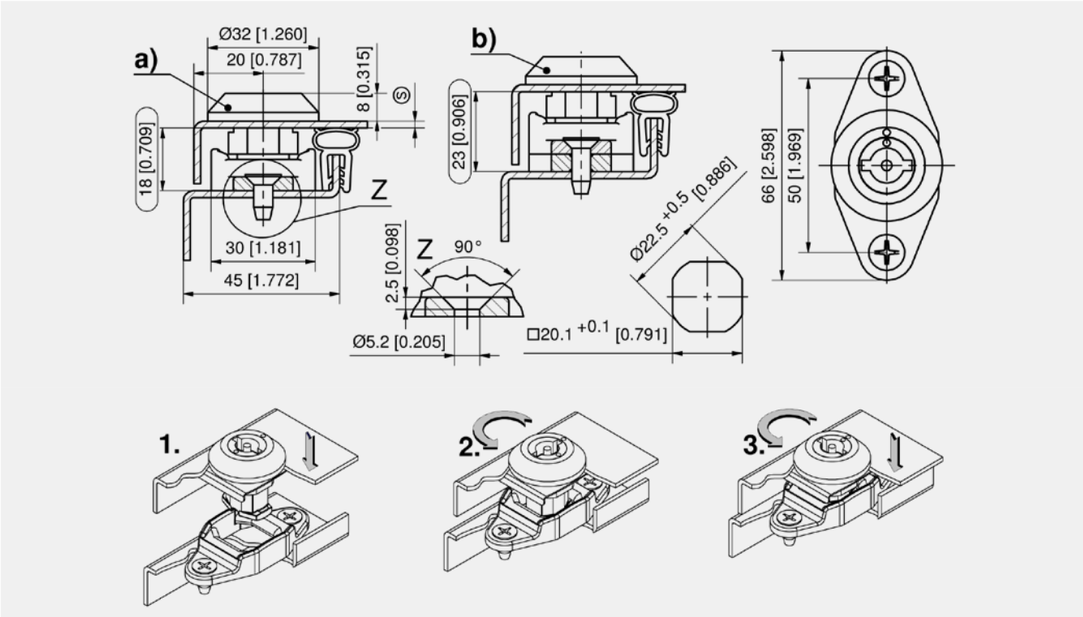

Compression latch

	Part Number	Bending	Insert	Installation type	Delivery Unit
a)	291-9005.00-00000	18 mm	Double bit 3mm pin	screw-on	10 pcs.
a)	291-9001.00-00000	18 mm	Double bit 5mm pin	screw-on	10 pcs.
a)	291-9004.00-00000	18 mm	Triangular 8mm	screw-on	10 pcs.
a)	291-9002.00-00000	18 mm	Square 8mm	screw-on	10 pcs.
a)	291-9003.00-00000	18 mm	Slotted 2x4mm	screw-on	10 pcs.
b)	291-9011.00-00000	23 mm	Double bit 3mm pin	screw-on	10 pcs.
b)	291-9007.00-00000	23 mm	Double bit 5mm pin	screw-on	10 pcs.
b)	291-9010.00-00000	23 mm	Triangular 8mm	screw-on	10 pcs.
b)	291-9008.00-00000	23 mm	Square 8mm	screw-on	10 pcs.
b)	291-9009.00-00000	23 mm	Slotted 2x4mm	screw-on	10 pcs.

+	Accessories
768	6-100 **Wrench**
766	6-101 **Universal key**

1-070

◂ all product details on DIRAK.com

Compression Latch Pr20.1

[1-071]

Advantages

- Compression 3mm.
- Low construction height of 22mm.
- Marking on the casing top indicates the final position.
- Vibration-proof.
- IP65 according to DIN EN 60529.
- Fixed cam H-dimension 8mm, L36mm.
- Tool-less installation with a spring clip.
- A pre-assembled quarter-turn can be installed through the cutout.

Materials

- **Housing, insert and cam:** zinc die, black
- **Fixing clip:** stainless steel
- **O-ring and flat external seal:** NBR

Remarks

(S) Door-thickness max. 2mm

1. flat external seal
2. ramp 1.5mm
3. fastening clip
4. markings
5. stroke

20

IP 65

RoHS WEEE

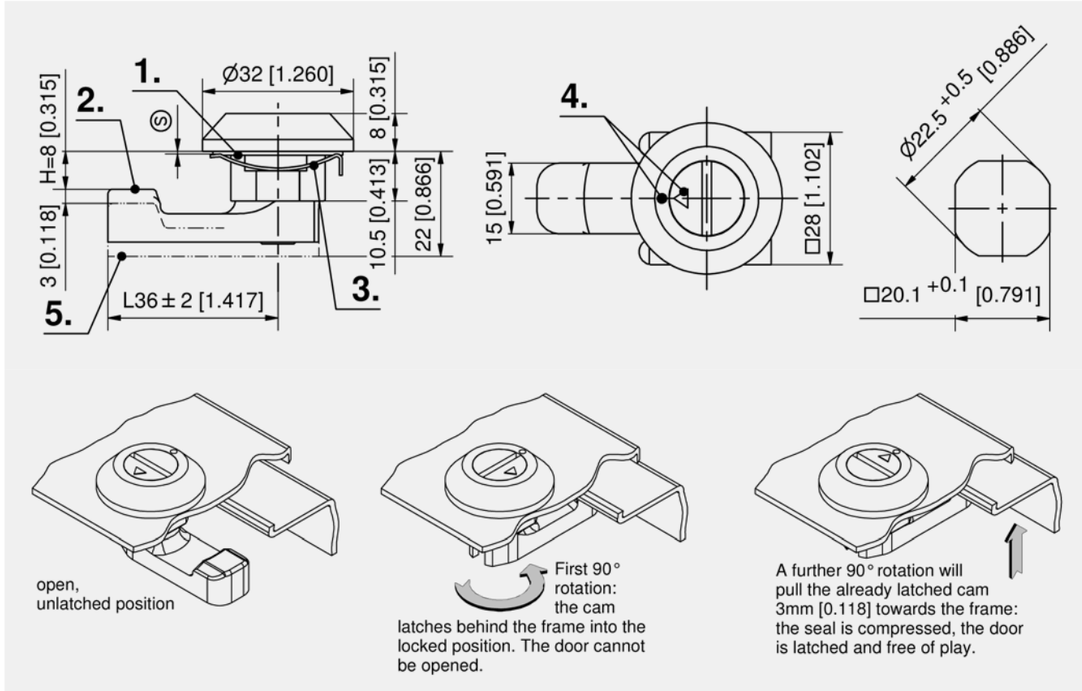

Compression latch, version LH, closing right

Part Number	Insert	Construction depth opened	Installation type	Delivery Unit
291-9102.00-00000	Slotted 2x4mm	22 mm	tool-less	10 pcs.

+	Accessories
769	204-0409.03-00000 **Hollow key, (logo both sides)**

all product details ▸ on DIRAK.com

1-071

Compression Latch Pr20.1

[1-077]

20

R L

IP 65

15 Nm

RoHS WEEE

Advantages

- Compression 6.5mm.
- Low profile design.
- The coloured marking on the casing top represents the opened/closed position in form of a padlock.
- Vibration-proof.
- IP65 according to DIN EN 60529.
- RH and LH version.
- Grounding by single sided grounding nut.
- With fixed H-dimension (depending on cam).
- The compression latch will be screwed into the cutout with the pre-assembled cam.

Materials

- **Housing, insert and cam:** zinc die, chrome plated
- **Plug:** PA6, black
- **O-rings and flat external seal:** NBR
- **Serrated lock washer:** steel, zinc plated

Remarks

(S) Door-thickness pre-assembled max. 2.5mm

1. flat external seal
2. ramp raduis
3. stroke

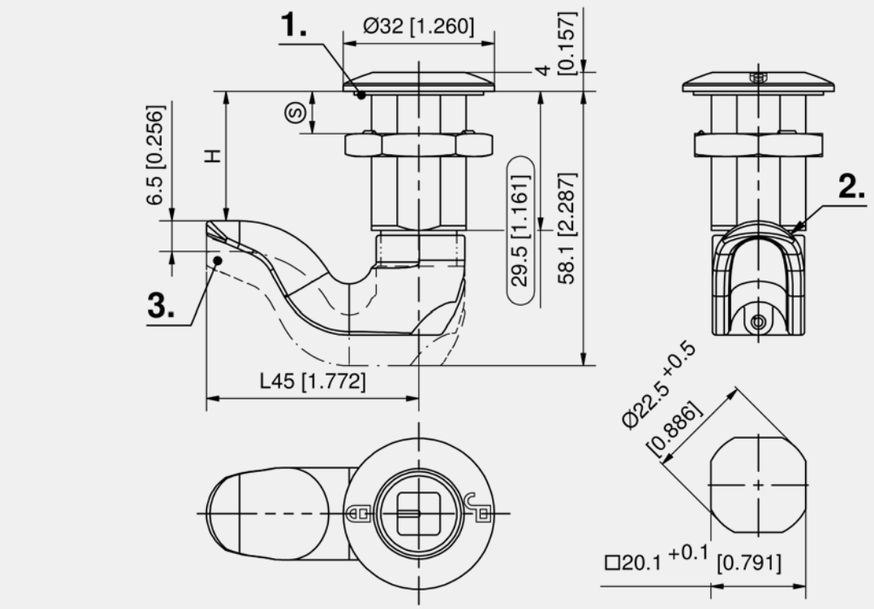

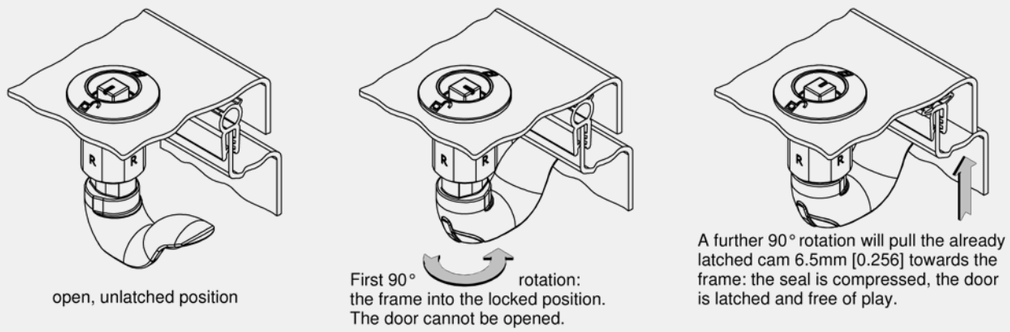

1-077

all product details on DIRAK.com

Compression latch with insert, version RH, closing left

Part Number	H-dimension	Insert	Installation type	Delivery Unit
248-9303.00-00022	22 mm	Square 8mm	screw-on	1 pc.
248-9303.00-00024	24 mm	Square 8mm	screw-on	1 pc.
248-9303.00-00026	26 mm	Square 8mm	screw-on	1 pc.
248-9303.00-00028	28 mm	Square 8mm	screw-on	1 pc.
248-9303.00-00038	38 mm	Square 8mm	screw-on	1 pc.
248-9308.00-00022	22 mm	Triangular 8mm	screw-on	1 pc.
248-9308.00-00024	24 mm	Triangular 8mm	screw-on	1 pc.
248-9308.00-00026	26 mm	Triangular 8mm	screw-on	1 pc.
248-9308.00-00028	28 mm	Triangular 8mm	screw-on	1 pc.
248-9308.00-00038	38 mm	Triangular 8mm	screw-on	1 pc.

Compression latch with insert, version LH, closing right

Part Number	H-dimension	Insert	Installation type	Delivery Unit
248-9353.00-00022	22 mm	Square 8mm	screw-on	1 pc.
248-9353.00-00024	24 mm	Square 8mm	screw-on	1 pc.
248-9353.00-00026	26 mm	Square 8mm	screw-on	1 pc.
248-9353.00-00028	28 mm	Square 8mm	screw-on	1 pc.
248-9353.00-00038	38 mm	Square 8mm	screw-on	1 pc.
248-9358.00-00022	22 mm	Triangular 8mm	screw-on	1 pc.
248-9358.00-00024	24 mm	Triangular 8mm	screw-on	1 pc.
248-9358.00-00026	26 mm	Triangular 8mm	screw-on	1 pc.
248-9358.00-00028	28 mm	Triangular 8mm	screw-on	1 pc.
248-9358.00-00038	38 mm	Triangular 8mm	screw-on	1 pc.

Compression latch with insert and washer, version RH, closing left

Part Number	H-dimension	Insert	Installation type	Delivery Unit
248-9309.00-00022	22 mm	Conical square 9mm	screw-on	1 pc.
248-9309.00-00024	24 mm	Conical square 9mm	screw-on	1 pc.
248-9309.00-00026	26 mm	Conical square 9mm	screw-on	1 pc.
248-9309.00-00028	28 mm	Conical square 9mm	screw-on	1 pc.
248-9309.00-00038	38 mm	Conical square 9mm	screw-on	1 pc.

Compression latch with insert and washer, version LH, closing right

Part Number	H-dimension	Insert	Installation type	Delivery Unit
248-9359.00-00022	22 mm	Conical square 9mm	screw-on	1 pc.
248-9359.00-00024	24 mm	Conical square 9mm	screw-on	1 pc.
248-9359.00-00026	26 mm	Conical square 9mm	screw-on	1 pc.
248-9359.00-00028	28 mm	Conical square 9mm	screw-on	1 pc.
248-9359.00-00038	38 mm	Conical square 9mm	screw-on	1 pc.

	Accessories
170	1-270 **Dust Caps and Sealing Plug Pr20.1**
768	6-100 **Wrench**
766	6-101 **Universal key**
770	6-105 **Keys for the Railway Sector**
169	200-4601.00-00000 **Anti-rotation device**
169	200-4601.02-00000 **Anti-rotation device**
169	800-0064.00-00000 **Serrated lock washer**
169	840-6798.00-00023 **Serrated lock washer**

Compression Latch Pr20.1 L32

[1-078]

20

DIN 61373

R L

IP 65/67

15 Nm

RoHS WEEE

Advantages

- Compression 6mm.
- Flat head shape.
- The coloured marking on the casing top indicates the opened/closed position in form of a padlock.
- Inserts with coloured marking.
- Vibration-proof according to DIN EN 61373.
- IP65/67 according to DIN EN 60529.
- RH and LH version.
- The H-dimension can be varied via the cranking of the cams.
- Grounding by grounding nut.

Materials

- **Housing, insert:** zinc die, chrome plated glossy or black matte, E-coated
- **Axis, nut:** steel, zinc plated
- **Grounding nut:** zinc die, untreated

Remarks

(S) Door-thickness max. 22mm

Please configure the quarter-turn with a cam.

Negatively bent cams can **not** be installed pre-assembled.

1. compression 6mm
2. foamed sealing PUR

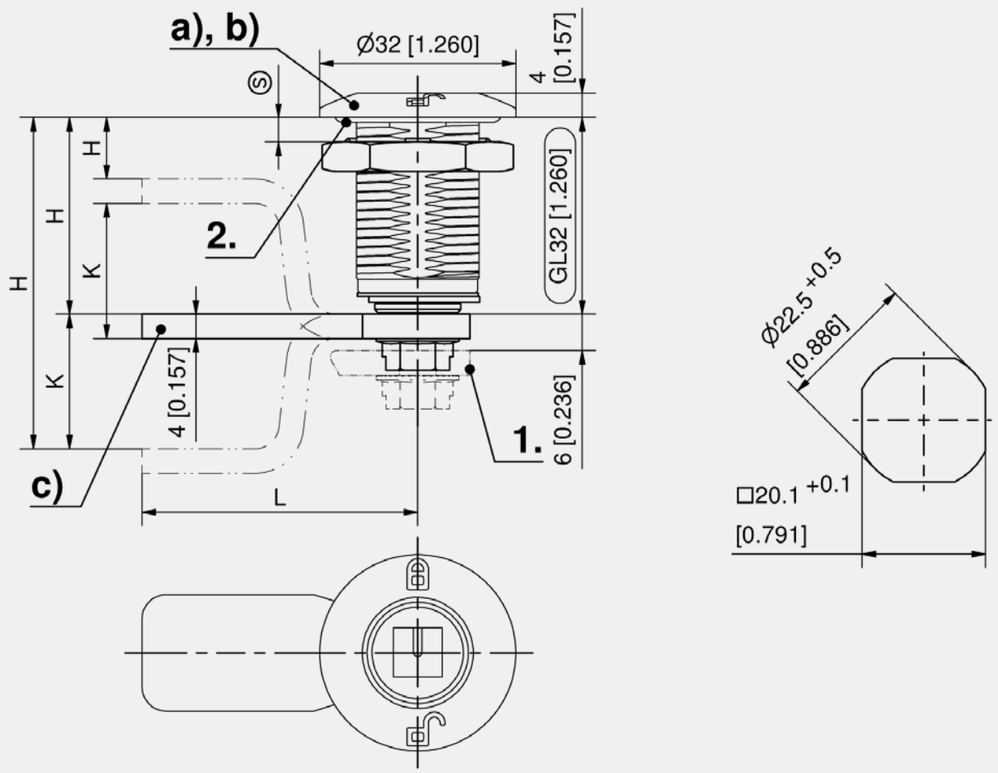

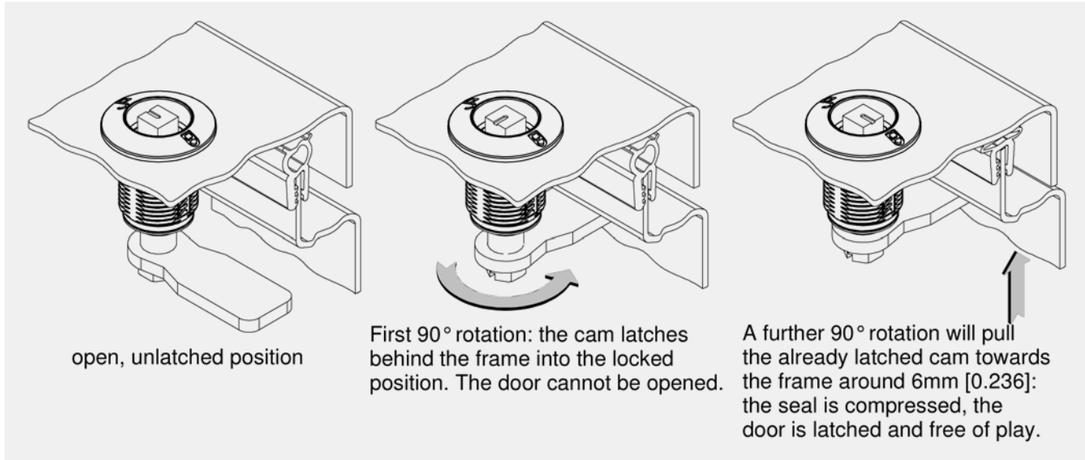

Compression latch with insert, version RH, closing left

	Part Number	Surface	Insert	Grounding type	Installation type	Delivery Unit
a)	248-9802.01-01201	chrome plated	Square 8mm	Grounding nut	screw-on	1 pc.
a)	248-9862.03-01201	black	Square 8mm		screw-on	1 pc.
a)	248-9803.01-01201	chrome plated	Double bit 3mm pin	Grounding nut	screw-on	1 pc.
a)	248-9804.01-01201	chrome plated	Double bit 5mm pin	Grounding nut	screw-on	1 pc.
a)	248-9807.01-01201	chrome plated	Triangular 8mm	Grounding nut	screw-on	1 pc.
a)	248-9808.01-01201	chrome plated	Conical square 9mm	Grounding nut	screw-on	1 pc.
a)	248-9868.03-01201	black	Conical square 9mm		screw-on	1 pc.

Compression latch with insert, version LH, closing right

	Part Number	Surface	Insert	Grounding type	Installation type	Delivery Unit
b)	248-9802.01-02201	chrome plated	Square 8mm	Grounding nut	screw-on	1 pc.
b)	248-9862.03-02201	black	Square 8mm		screw-on	1 pc.
b)	248-9803.01-02201	chrome plated	Double bit 3mm pin	Grounding nut	screw-on	1 pc.
b)	248-9804.01-02201	chrome plated	Double bit 5mm pin	Grounding nut	screw-on	1 pc.
b)	248-9807.01-02201	chrome plated	Triangular 8mm	Grounding nut	screw-on	1 pc.
b)	248-9808.01-02201	chrome plated	Conical square 9mm	Grounding nut	screw-on	1 pc.
b)	248-9868.03-02201	black	Conical square 9mm		screw-on	1 pc.

		Accessories
c)	158	1-102.01 **Cams L45 Steel**
	768	6-100 **Wrench**
	766	6-101 **Universal key**
	770	6-105 **Keys for the Railway Sector**
	170	200-4103.00-00000 **Dust cap**
	169	200-4601.00-00000 **Anti-rotation device**
	169	200-4601.02-00000 **Anti-rotation device**

1-078

all product details on DIRAK.com

Compression Latch Pr20.1 L22/32 Stainless Steel [7-078]

Advantages

- Compression 6mm.
- Flat head shape.
- The coloured marking on the casing top indicates the opened/closed position in form of a padlock.
- Insert with coloured marking.
- Vibration-proof.
- IP 65/67 according to DIN EN 60529.
- IP 69K according to DIN 40050.
- RH and LH version.
- Grounding by single-sided grounding nut.
- The H-dimension can be varied via the cranking of the cams.

Materials

- **Housings, insert, axle and grounding nut:** AISI 316
- **Serrated screw:** AISI 304
- **O-ring:** NBR, black

Remarks

(S) Door-thickness max. 12mm for GL22

(S) Door-thickness max. 22mm for GL32

Please configure the quarter-turn with a cam.

Negatively bent cams can not be installed pre-assembled.

1. compression 6mm
2. single-sided griunding nut
3. flat external seal
4. GL 32mm with foamed sealing PUR

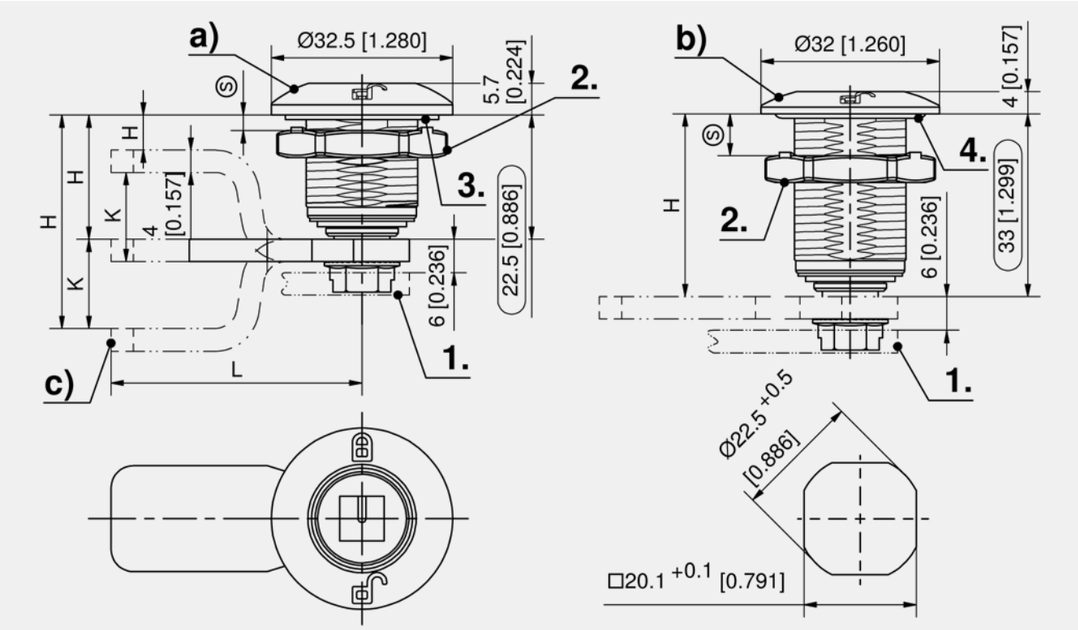

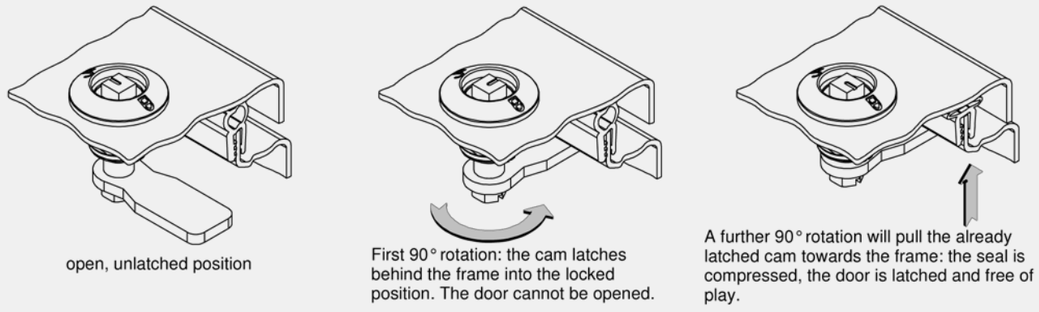

7-078

all product details on DIRAK.com

Compression latch with insert, version RH, closing left

	Part Number	Insert	Housing length	Door-thickness (S)	Installation type	Delivery Unit
a)	248-9043.00-03008	Square 8mm	22 mm	max. 12 mm	screw-on	1 pc.
a)	248-9043.00-06008	Triangular 8mm	22 mm	max. 12 mm	screw-on	1 pc.
a)	248-9043.00-09003	Double bit 3mm pin	22 mm	max. 12 mm	screw-on	1 pc.
a)	248-9043.00-07007	Conical square 9mm	22 mm	max. 12 mm	screw-on	1 pc.
b)	248-9100.00-00000	Square 6mm	32 mm	max. 22 mm	screw-on	1 pc.
b)	248-9101.00-00000	Square 7mm	32 mm	max. 22 mm	screw-on	1 pc.
b)	248-9102.00-00000	Square 8mm	32 mm	max. 22 mm	screw-on	1 pc.
b)	248-9103.00-00000	Double bit 3mm pin	32 mm	max. 22 mm	screw-on	1 pc.
b)	248-9104.00-00000	Double bit 5mm pin	32 mm	max. 22 mm	screw-on	1 pc.
b)	248-9105.00-00000	Triangular 6.5mm	32 mm	max. 22 mm	screw-on	1 pc.
b)	248-9106.00-00000	Triangular 7mm	32 mm	max. 22 mm	screw-on	1 pc.
b)	248-9107.00-00000	Triangular 8mm	32 mm	max. 22 mm	screw-on	1 pc.
b)	248-9108.00-00000	Conical square 9mm	32 mm	max. 22 mm	screw-on	1 pc.
b)	248-9109.00-00000	Hex. SW 11	32 mm	max. 22 mm	screw-on	1 pc.
b)	248-9110.00-00000	Conial triangular pointed, 7mm	32 mm	max. 22 mm	screw-on	1 pc.

Compression latch with insert, version LH, closing right

	Part Number	Insert	Housing length	Door-thickness (S)	Installation type	Delivery Unit
a)	248-9042.00-03008	Square 8mm	22 mm	max. 12 mm	screw-on	1 pc.
a)	248-9042.00-06008	Triangular 8mm	22 mm	max. 12 mm	screw-on	1 pc.
a)	248-9042.00-09003	Double bit 3mm pin	22 mm	max. 12 mm	screw-on	1 pc.
a)	248-9042.00-07007	Conical square 9mm	22 mm	max. 12 mm	screw-on	1 pc.
b)	248-9150.00-00000	Square 6mm	32 mm	max. 22 mm	screw-on	1 pc.
b)	248-9151.00-00000	Square 7mm	32 mm	max. 22 mm	screw-on	1 pc.
b)	248-9152.00-00000	Square 8mm	32 mm	max. 22 mm	screw-on	1 pc.
b)	248-9153.00-00000	Double bit 3mm pin	32 mm	max. 22 mm	screw-on	1 pc.
b)	248-9154.00-00000	Double bit 5mm pin	32 mm	max. 22 mm	screw-on	1 pc.
b)	248-9155.00-00000	Triangular 6.5mm	32 mm	max. 22 mm	screw-on	1 pc.
b)	248-9156.00-00000	Triangular 7mm	32 mm	max. 22 mm	screw-on	1 pc.
b)	248-9157.00-00000	Triangular 8mm	32 mm	max. 22 mm	screw-on	1 pc.
b)	248-9158.00-00000	Conical square 9mm	32 mm	max. 22 mm	screw-on	1 pc.
b)	248-9159.00-00000	Hex. SW 11	32 mm	max. 22 mm	screw-on	1 pc.
b)	248-9160.00-00000	Conial triangular pointed, 7mm	32 mm	max. 22 mm	screw-on	1 pc.

	Accessories
c) 159	7-105.01 **Cams L35/45 Stainless Steel**
768	6-100 **Wrench**
766	6-101 **Universal key**
770	6-105 **Keys for the Railway Sector**
170	200-4103.00-00000 **Dust cap**
169	200-4601.00-00000 **Anti-rotation device**
169	200-4601.02-00000 **Anti-rotation device**

Compression Latch Pr20.1 L32 with H-Dimension Adjustment

[1-079]

20

DIN 61373

R L

IP 65/67

IP 69K

15 Nm

RoHS WEEE

Advantages

- Compression 6mm.
- Flat head shape.
- The coloured marking on the casing top indicates the opened/closed position in form of a padlock.
- Inserts with coloured marking.
- Vibration-proof.
- IP65/67 according to DIN EN 60529 and IP69K according to DIN 40050.
- RH and LH version.
- Grounding by single-sided grounding nut.
- The H-dimension 17 - 73mm can be varied via the cranking of the cams.
- The cam can be varied via H-dimension adjustment on the threaded square rod.

Materials

- **Housing, insert:** zinc die, chrome plated glossy or black matte e-coated
- **Threaded square rod, nut:** steel, zinc plated
- **Grounding nut:** zinc die, untreated
- **Catch:** PA
- **Knurled wheel:** zinc die

Remarks

(S) Door-thickness max. 22mm

Please configure the quarter-turn with insert and cam.

1. compression 6mm
2. foamed sealing PUR

d) catch with h-dimension adjustment

Variant where the cam can be variably adjusted with nuts, see website 1-079.01.

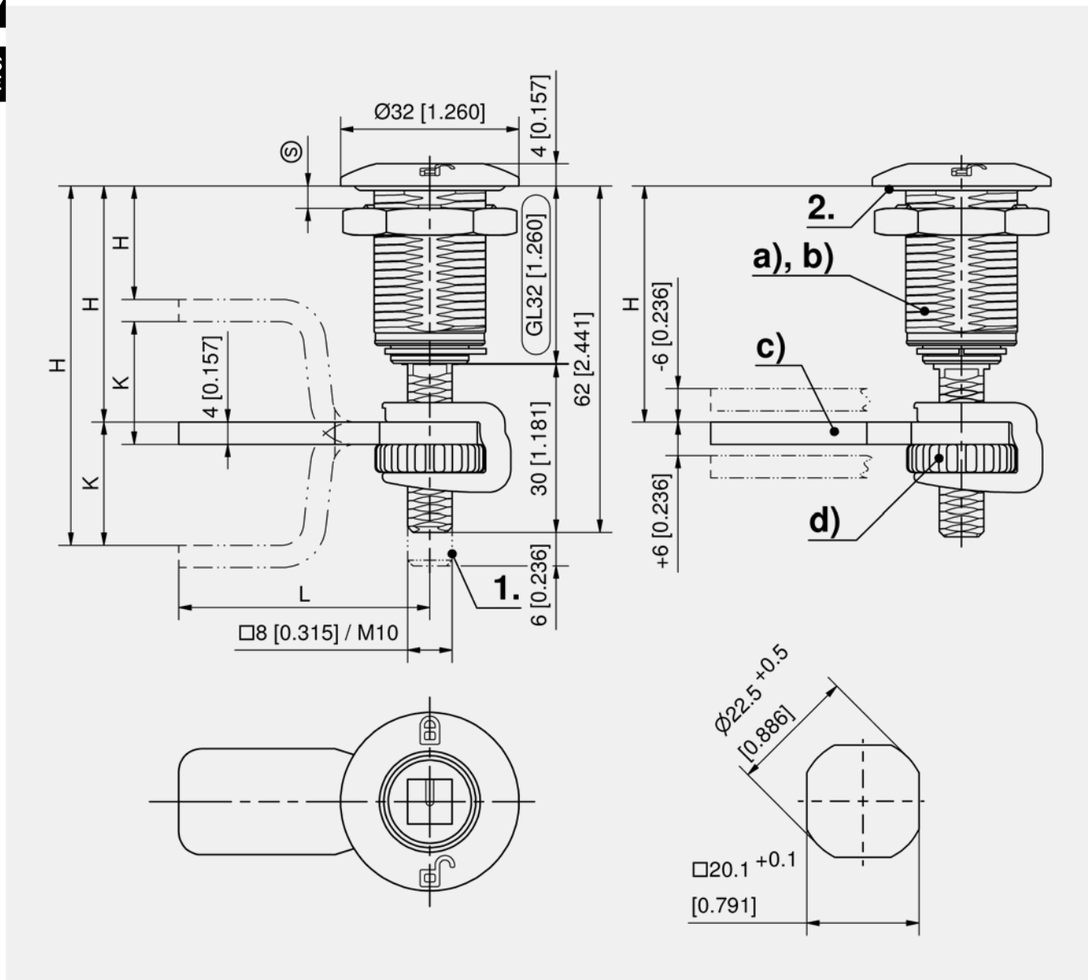

1-079

all product details on DIRAK.com

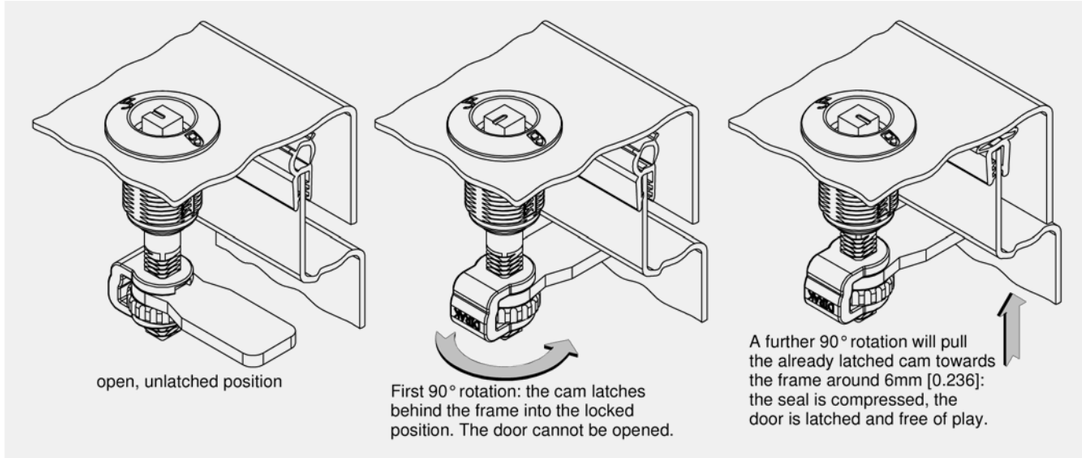

Compression latch with insert, version RH, closing left

	Part Number	Surface	Insert	Installation type	Delivery Unit
a)	248-9802.11-11201	chrome plated	Square 8mm	screw-on	1 pc.
a)	248-9802.13-11201	black	Square 8mm	screw-on	1 pc.
a)	248-9803.11-11201	chrome plated	Double bit 3mm pin	screw-on	1 pc.
a)	248-9804.11-11201	chrome plated	Double bit 5mm pin	screw-on	1 pc.
a)	248-9807.11-11201	chrome plated	Triangular 8mm	screw-on	1 pc.
a)	248-9808.11-11201	chrome plated	Conical square 9mm	screw-on	1 pc.
a)	248-9808.13-11201	black	Conical square 9mm	screw-on	1 pc.

Compression latch with insert, version LH, closing right

	Part Number	Surface	Insert	Installation type	Delivery Unit
b)	248-9802.11-12201	chrome plated	Square 8mm	screw-on	1 pc.
b)	248-9802.13-12201	black	Square 8mm	screw-on	1 pc.
b)	248-9803.11-12201	chrome plated	Double bit 3mm pin	screw-on	1 pc.
b)	248-9804.11-12201	chrome plated	Double bit 5mm pin	screw-on	1 pc.
b)	248-9807.11-12201	chrome plated	Triangular 8mm	screw-on	1 pc.
b)	248-9808.11-12201	chrome plated	Conical square 9mm	screw-on	1 pc.
b)	248-9808.13-12201	black	Conical square 9mm	screw-on	1 pc.

	Accessories
c) 158	1-102.01 **Cams L45 Steel**
768	6-100 **Wrench**
766	6-101 **Universal key**
770	6-105 **Keys for the Railway Sector**
170	200-4103.00-00000 **Dust cap**
169	200-4601.00-00000 **Anti-rotation device**
169	200-4601.02-00000 **Anti-rotation device**

Compression Latch Pr20.1 L22/32 with H-Dimension Adjustment Stainless Steel

[7-079]

Advantages

- Compression 6mm (1.).
- Flat head shape.
- The coloured marking on the casing top indicates the opened/closed position in form of a padlock.
- Insert with coloured marking.
- Vibration-proof.
- IP65/67 according to DIN EN 60529.
- GL 32mm IP69K according to DIN 40050.
- RH and LH version.
- Grounding by single-sided grounding nut (2.).
- The H-dimension can be varied via the cranking of the cams.
- The cam can be varied via H-dimension adjustment on the threaded square rod.

Materials

- **Housing, knurled wheel, insert, threaded square rod and grounding nut:** AISI 316
- **Catch:** AISI 301

Remarks

(S) Door-thickness max. 12mm for GL22

(S) Door-thickness max. 22mm for GL32

Please configure the quarter-turn with a cam.

Negatively bent cams can not be installed pre-assembled.

3. flat external seal

4. GL 32mm with foamed sealing PUR

5. H-dimension adjustment

Variant where the cam can be variably adjusted with nuts, see website 7-079.01.

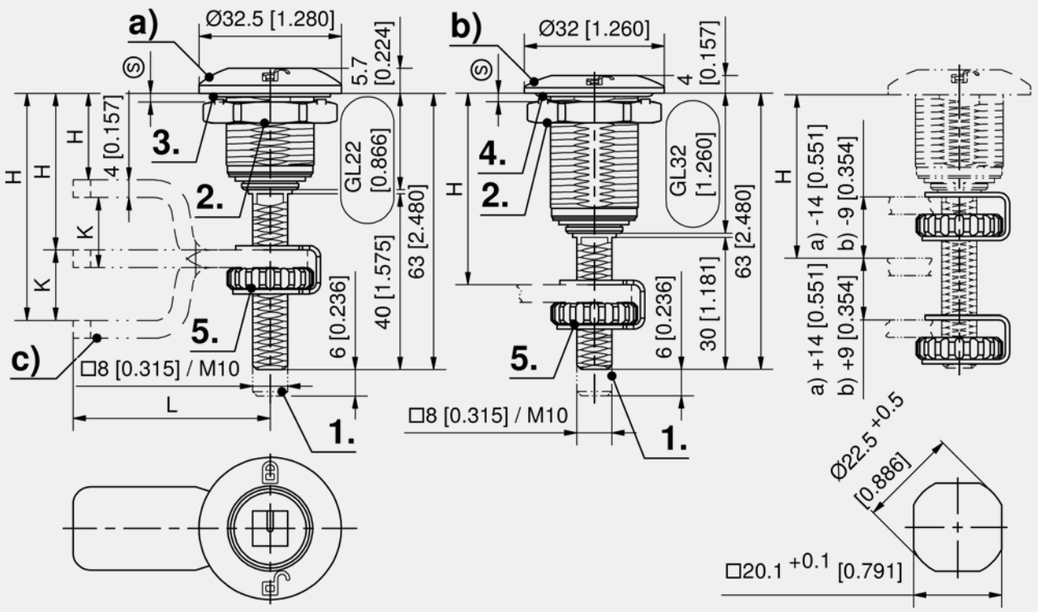

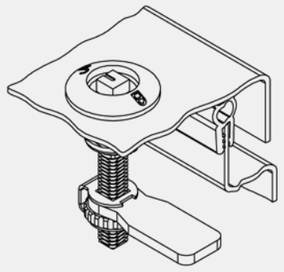

open, unlatched position

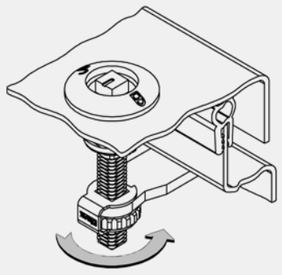

First 90° rotation: the cam latches behind the frame into the locked position. The door cannot be opened.

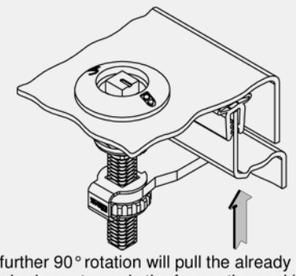

A further 90° rotation will pull the already latched cam towards the frame: the seal is compressed, the door is latched and free of play.

7-079

all product details on DIRAK.com

Compression latch with insert, version RH, closing left

	Part Number	Insert	Housing length	Door-thickness (S)	Installation type	Delivery Unit
a)	348-9102.00-00000	Square 8mm	22 mm	max. 12 mm	screw-on	1 pc.
a)	348-9107.00-00000	Triangular 8mm	22 mm	max. 12 mm	screw-on	1 pc.
a)	348-9103.00-00000	Double bit 3mm pin	22 mm	max. 12 mm	screw-on	1 pc.
a)	348-9108.00-00000	Conical square 9mm	22 mm	max. 12 mm	screw-on	1 pc.
b)	348-9300.00-00000	Square 6mm	32 mm	max. 22 mm	screw-on	1 pc.
b)	348-9301.00-00000	Square 7mm	32 mm	max. 22 mm	screw-on	1 pc.
b)	348-9302.00-00000	Square 8mm	32 mm	max. 22 mm	screw-on	1 pc.
b)	348-9303.00-00000	Double bit 3mm pin	32 mm	max. 22 mm	screw-on	1 pc.
b)	348-9304.00-00000	Double bit 5mm pin	32 mm	max. 22 mm	screw-on	1 pc.
b)	348-9305.00-00000	Triangular 6.5mm	32 mm	max. 22 mm	screw-on	1 pc.
b)	348-9306.00-00000	Triangular 7mm	32 mm	max. 22 mm	screw-on	1 pc.
b)	348-9307.00-00000	Triangular 8mm	32 mm	max. 22 mm	screw-on	1 pc.
b)	348-9308.00-00000	Conical square 9mm	32 mm	max. 22 mm	screw-on	1 pc.
b)	348-9309.00-00000	Hex. SW 11	32 mm	max. 22 mm	screw-on	1 pc.
b)	348-9310.00-00000	Conial triangular pointed, 7mm	32 mm	max. 22 mm	screw-on	1 pc.

Compression latch with insert, version LH, closing right

	Part Number	Insert	Housing length	Door-thickness (S)	Installation type	Delivery Unit
a)	348-9152.00-00000	Square 8mm	22 mm	max. 12 mm	screw-on	1 pc.
a)	348-9157.00-00000	Triangular 8mm	22 mm	max. 12 mm	screw-on	1 pc.
a)	348-9153.00-00000	Double bit 3mm pin	22 mm	max. 12 mm	screw-on	1 pc.
a)	348-9158.00-00000	Conical square 9mm	22 mm	max. 12 mm	screw-on	1 pc.
b)	348-9350.00-00000	Square 6mm	32 mm	max. 22 mm	screw-on	1 pc.
b)	348-9351.00-00000	Square 7mm	32 mm	max. 22 mm	screw-on	1 pc.
b)	348-9352.00-00000	Square 8mm	32 mm	max. 22 mm	screw-on	1 pc.
b)	348-9353.00-00000	Double bit 3mm pin	32 mm	max. 22 mm	screw-on	1 pc.
b)	348-9354.00-00000	Double bit 5mm pin	32 mm	max. 22 mm	screw-on	1 pc.
b)	348-9355.00-00000	Triangular 6.5mm	32 mm	max. 22 mm	screw-on	1 pc.
b)	348-9356.00-00000	Triangular 7mm	32 mm	max. 22 mm	screw-on	1 pc.
b)	348-9357.00-00000	Triangular 8mm	32 mm	max. 22 mm	screw-on	1 pc.
b)	348-9358.00-00000	Conical square 9mm	32 mm	max. 22 mm	screw-on	1 pc.
b)	348-9359.00-00000	Hex. SW 11	32 mm	max. 22 mm	screw-on	1 pc.
b)	348-9360.00-00000	Conial triangular pointed, 7mm	32 mm	max. 22 mm	screw-on	1 pc.

		Accessories
c)	174	7-077 **Height Adjustable Cam L45 Stainless Steel**
	768	6-100 **Wrench**
	766	6-101 **Universal key**
	770	6-105 **Keys for the Railway Sector**
	159	7-105.01 **Cams L35/45 Stainless Steel**
	170	200-4103.00-00000 **Dust cap**
	169	200-4601.00-00000 **Anti-rotation device**
	169	200-4601.02-00000 **Anti-rotation device**

DST Compression Latch Pr32x20 L22/28

[1-081DST]

DST

DIN 61373

R L

IP 65

RoHS WEEE

Advantages

- Flush quarter-turn for snap-in installation into cutout 32x20.1mm.
- Rectangular cutout guarantees a perfect alignment.
- High transmission ratio with high contact pressure due to planetary gear.
- Vibration-proof according to DIN EN 61373.
- IP65 according to DIN EN 60529.
- RH / LH application, does not need to be converted when the door is changed.
- The compression latch can be snapped-in into the cutout as a completely pre-assembled unit.
- Tool-less blind installation.
- Rolling friction by cam with POM-roller.

Materials

- **Housing and insert:** zinc die, chrome plated
- **Cam:** zinc die, zinc plated
- **Snap wedges:** sintered steel
- **Spring:** spring steel
- **Washer:** steel, zinc plated
- **Roller:** POM, matte black
- **Cover:** PA6, black
- **O-ring:** NBR, black
- **Collar screw:** steel

Remarks

Closing and opening operation 180°, left and right turning, positive detent in closed and open position.

1. compression 10 - 20mm
2. o-ring

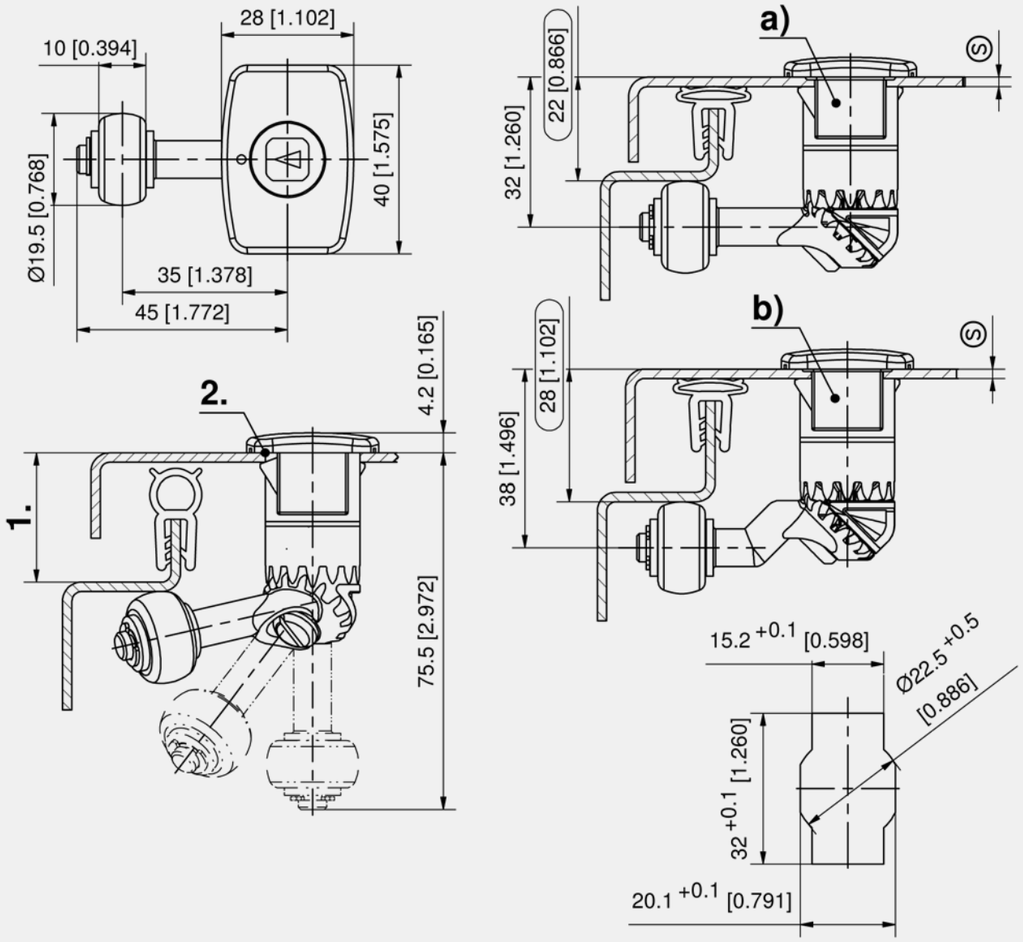

1-081DST

◂ all product details on DIRAK.com

Operation

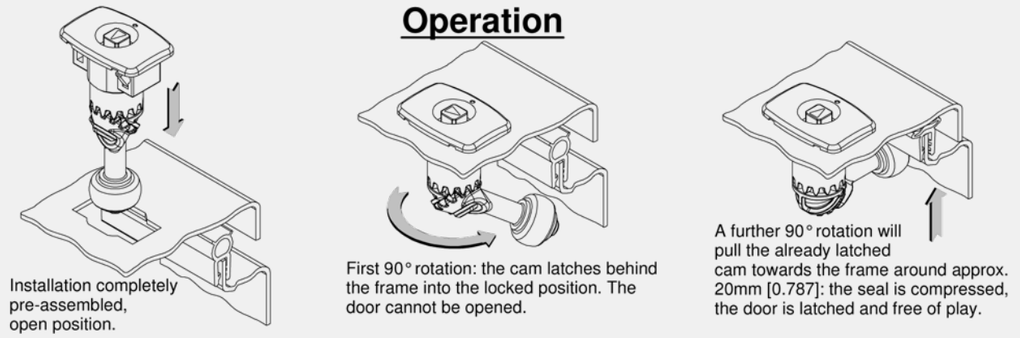

Compression latch with insert, bending 22

	Part Number	Insert	Clamping range (S)	Installation type	Delivery Unit
a)	448-9101.00-01012	Square 8mm	0.8 - 1.5 mm	tool-less	1 pc.
a)	448-9101.00-01016	Square 8mm	1.3 - 2.0 mm	tool-less	1 pc.
a)	448-9101.00-01020	Square 8mm	1.8 - 2.5 mm	tool-less	1 pc.
a)	448-9101.00-01026	Square 8mm	2.3 - 3.0 mm	tool-less	1 pc.
a)	448-9101.00-01031	Square 8mm	2.8 - 3.5 mm	tool-less	1 pc.
a)	448-9101.00-02012	Double bit 3mm pin	0.8 - 1.5 mm	tool-less	1 pc.
a)	448-9101.00-02016	Double bit 3mm pin	1.3 - 2.0 mm	tool-less	1 pc.
a)	448-9101.00-02020	Double bit 3mm pin	1.8 - 2.5 mm	tool-less	1 pc.
a)	448-9101.00-02026	Double bit 3mm pin	2.3 - 3.0 mm	tool-less	1 pc.
a)	448-9101.00-02031	Double bit 3mm pin	2.8 - 3.5 mm	tool-less	1 pc.
a)	448-9101.00-03012	Double bit 5mm pin	0.8 - 1.5 mm	tool-less	1 pc.
a)	448-9101.00-03016	Double bit 5mm pin	1.3 - 2.0 mm	tool-less	1 pc.
a)	448-9101.00-03020	Double bit 5mm pin	1.8 - 2.5 mm	tool-less	1 pc.
a)	448-9101.00-03026	Double bit 5mm pin	2.3 - 3.0 mm	tool-less	1 pc.
a)	448-9101.00-03031	Double bit 5mm pin	2.8 - 3.5 mm	tool-less	1 pc.

Compression latch with insert, bending 28

	Part Number	Insert	Clamping range (S)	Installation type	Delivery Unit
b)	448-9102.00-01012	Square 8mm	0.8 - 1.5 mm	tool-less	1 pc.
b)	448-9102.00-01016	Square 8mm	1.3 - 2.0 mm	tool-less	1 pc.
b)	448-9102.00-01020	Square 8mm	1.8 - 2.5 mm	tool-less	1 pc.
b)	448-9102.00-01026	Square 8mm	2.3 - 3.0 mm	tool-less	1 pc.
b)	448-9102.00-01031	Square 8mm	2.8 - 3.5 mm	tool-less	1 pc.
b)	448-9102.00-02012	Double bit 3mm pin	0.8 - 1.5 mm	tool-less	1 pc.
b)	448-9102.00-02016	Double bit 3mm pin	1.3 - 2.0 mm	tool-less	1 pc.
b)	448-9102.00-02020	Double bit 3mm pin	1.8 - 2.5 mm	tool-less	1 pc.
b)	448-9102.00-02026	Double bit 3mm pin	2.3 - 3.0 mm	tool-less	1 pc.
b)	448-9102.00-02031	Double bit 3mm pin	2.8 - 3.5 mm	tool-less	1 pc.
b)	448-9102.00-03012	Double bit 5mm pin	0.8 - 1.5 mm	tool-less	1 pc.
b)	448-9102.00-03016	Double bit 5mm pin	1.3 - 2.0 mm	tool-less	1 pc.
b)	448-9102.00-03020	Double bit 5mm pin	1.8 - 2.5 mm	tool-less	1 pc.
b)	448-9102.00-03026	Double bit 5mm pin	2.3 - 3.0 mm	tool-less	1 pc.
b)	448-9102.00-03031	Double bit 5mm pin	2.8 - 3.5 mm	tool-less	1 pc.

+	Accessories
768	6-100 **Wrench**
766	6-101 **Universal key**

Compression Latch Pr20.1

[1-081]

20

DIN 61373

R L

IP 65

15 Nm

RoHS WEEE

Advantages

- Compression 6.5mm.
- By turning the insert 90° the cam is at first put into closed position, by turning a further 90°, the cam will be pulled towards the frame.
- Matching dots mark the final position (see lower drawing).
- Vibration-proof according to DIN EN 61373.
- IP65 according to DIN EN 60529.
- RH and LH version.
- Grounding by grounding nut.

Materials

- **Housing:** zinc die, chrome plated or black
- **Insert:** brass, chrome plated, zinc die, black or chrome plated
- **Drip handle:** zinc die, black
- **Spring:** stainless steel
- **Cam:** zinc die, chrome plated
- **Adjusting screw, Nut:** steel, zinc plated

Remarks

(S) Door-thickness max. 22mm

Please configure the quarter-turn with insert and cam.

The H-dimension can be adjusted by the adjusting screw.

1. compression 6.5mm
2. flat external seal
3. adjusting screw

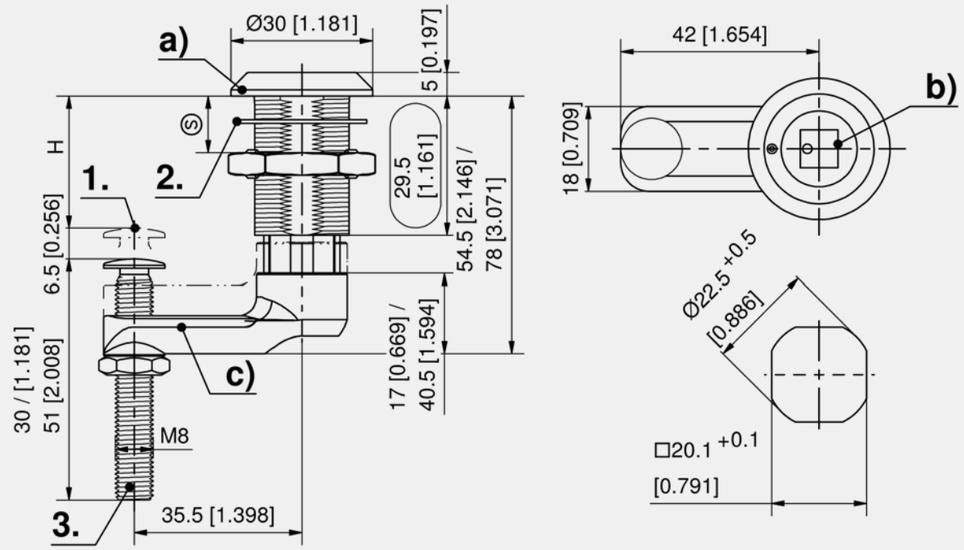

Operation

1-081

all product details on DIRAK.com

Compression latch, version RH, closing left

	Part Number	Surface	Grounding type	Installation type	Delivery Unit
a)	100-9001.00-00000	chrome plated		screw-on	1 pc.
a)	100-9002.00-00000	chrome plated	Grounding nut	screw-on	1 pc.
a)	100-9014.00-00000	black	Grounding nut	screw-on	1 pc.

Compression latch, version LH, closing right

	Part Number	Surface	Grounding type	Installation type	Delivery Unit
a)	100-9013.00-00000	chrome plated	Grounding nut	screw-on	1 pc.
a)	100-9015.00-00000	black	Grounding nut	screw-on	1 pc.

Inserts

	Part Number	Surface	Insert	Version	Delivery Unit
b)	100-9104.00-00000	chrome plated	Square 7mm		1 pc.
b)	100-9105.00-00000	chrome plated	Square 8mm		1 pc.
b)	100-9106.00-00000	chrome plated	Triangular 7mm		1 pc.
b)	100-9107.00-00000	chrome plated	Triangular 8mm		1 pc.
b)	100-9103.00-00000	chrome plated	Double bit 3mm pin		1 pc.
b)	100-9102.00-00000	chrome plated	Double bit 5mm pin		1 pc.
b)	100-9114.00-00000	chrome plated	Socket hex. 8mm (5/16")		1 pc.
b)	100-9123.00-00000	black	Socket hex. 8mm (5/16")		1 pc.
b)	100-9101.00-00000	chrome plated	Socket hex. 10mm		1 pc.
b)	100-9132.00-00000	chrome plated	Hex. 7/16"		1 pc.
b)	100-9109.00-00000	chrome plated	Slotted 2x4mm		1 pc.
b)	100-9110.00-00000	chrome plated	Drop handle	cam in line with the handle	1 pc.
b)	100-9111.00-00000	chrome plated	Drop handle	cam 90° to the handle	1 pc.

Cams, version RH

	Part Number	variable H-dimension	Hight of cam	Version	Delivery Unit
c)	200-9611.00-00000	0 - 37 mm	17 mm	Adjustable screw 51mm	1 pc.
c)	200-9610.00-00000	21 - 34 mm	17 mm	Adjustable screw 30mm	1 pc.
c)	200-9613.00-00000	24 - 60 mm	40.5 mm	Adjustable screw 51mm	1 pc.
c)	200-9612.00-00000	45 - 60 mm	40.5 mm	Adjustable screw 30mm	1 pc.

Cams, version LH

	Part Number	variable H-dimension	Hight of cam	Version	Delivery Unit
c)	200-9618.00-00000	21 - 34 mm	17 mm	Adjustable screw 30mm	1 pc.
c)	200-9614.00-00000	0 - 37 mm	17 mm	Adjustable screw 51mm	1 pc.

Accessories
768 6-100 **Wrench**
766 6-101 **Universal key**

Assembly options
200-0064.00-00000 **Assembling (must be ordered)**
200-0070.00-00000 **Assembling drip handle 90° door LH**
200-0071.00-00000 **Assembling drip handle 90° door RH**

Clamping Quarter-Turn Pr21.6

[1-080]

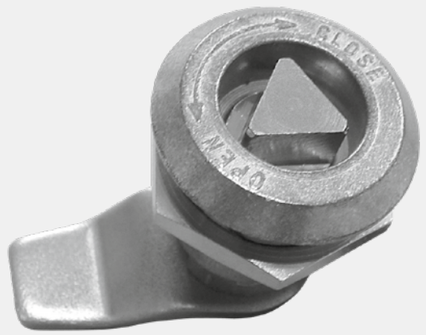

Advantages

- For cutout 21.6.
- 6mm compression stroke.
- The closing process is always clockwise.
- By turning the insert 90° the cam is at first put into closed position.
- Continuing rotation to the right (5x) will pull the cam towards the door.
- Vibration-proof.
- RH / LH application.

Materials

- **Housing:** zinc die, zinc plated
- **Insert:** brass, nickel plated
- **Spring and cam:** stainless steel
- **Nut:** steel, zinc plated

Remarks

(S) Door-thickness max. 6mm

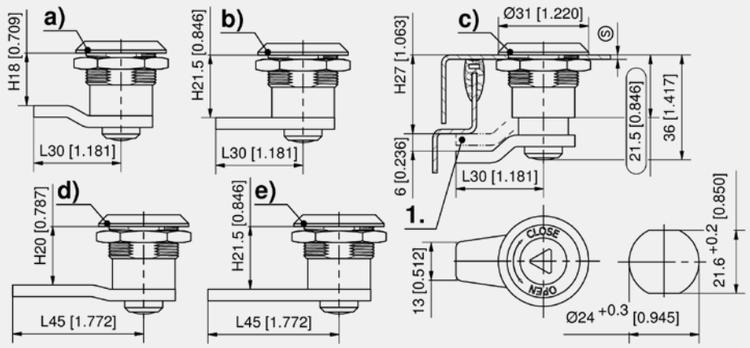

Clamping quarter-turn zinc die with insert and cam

	Part Number	H-dimension	Insert	Length of cam	Installation type	Delivery Unit
a)	248-9001.35-00000	18 mm	Square 7mm	L 30	screw-on	10 pcs.
a)	248-9002.35-00000	18 mm	Square 8mm	L 30	screw-on	10 pcs.
a)	248-9004.35-00000	18 mm	Triangular 8mm	L 30	screw-on	10 pcs.
a)	248-9006.35-00000	18 mm	Double bit 3mm pin	L 30	screw-on	10 pcs.
a)	248-9007.35-00000	18 mm	Double bit 5mm pin	L 30	screw-on	10 pcs.
b)	248-9010.35-00000	21.5 mm	Square 8mm	L 30	screw-on	10 pcs.
b)	248-9011.35-00000	21.5 mm	Triangular 7mm	L 30	screw-on	10 pcs.
b)	248-9015.35-00000	21.5 mm	Double bit 5mm pin	L 30	screw-on	10 pcs.
b)	248-9016.35-00000	21.5 mm	Slotted 2x4mm	L 30	screw-on	10 pcs.
c)	248-9018.35-00000	27 mm	Square 8mm	L 30	screw-on	10 pcs.
c)	248-9019.35-00000	27 mm	Triangular 7mm	L 30	screw-on	10 pcs.
c)	248-9020.35-00000	27 mm	Triangular 8mm	L 30	screw-on	10 pcs.
c)	248-9022.35-00000	27 mm	Double bit 3mm pin	L 30	screw-on	10 pcs.
c)	248-9023.35-00000	27 mm	Double bit 5mm pin	L 30	screw-on	10 pcs.
c)	248-9024.35-00000	27 mm	Slotted 2x4mm	L 30	screw-on	10 pcs.
d)	248-9025.35-00000	20 mm	Square 7mm	L 45	screw-on	10 pcs.
d)	248-9026.35-00000	20 mm	Square 8mm	L 45	screw-on	10 pcs.
d)	248-9030.35-00000	20 mm	Double bit 3mm pin	L 45	screw-on	10 pcs.
e)	248-9033.35-00000	21.5 mm	Square 7mm	L 45	screw-on	10 pcs.
e)	248-9034.35-00000	21.5 mm	Square 8mm	L 45	screw-on	10 pcs.
e)	248-9035.35-00000	21.5 mm	Triangular 7mm	L 45	screw-on	10 pcs.
e)	248-9036.35-00000	21.5 mm	Triangular 8mm	L 45	screw-on	10 pcs.
e)	248-9038.35-00000	21.5 mm	Double bit 3mm pin	L 45	screw-on	10 pcs.
e)	248-9039.35-00000	21.5 mm	Double bit 5mm pin	L 45	screw-on	10 pcs.

Accessories
768 6-100 **Wrench**
766 6-101 **Universal key**

1-080

◂ all product details on DIRAK.com

Quarter-Turn SOFTLINE Pr20.1 L18

[1-107]

Advantages

- For cutout Pr20.1.
- With integrated finger pull.
- IP65/67 according to DIN EN (optional).
- RH / LH application by rotatable bottom part.
- Grounding by grounding clip.
- On request parts can be assembled.
- The quarter-turn can be screwed into the cutout with the pre-assembled cam.

Materials

- **Housing:** PA6, black
- **Bottom:** zinc die, zinc plated

Remarks

(S) Door-thickness max. 8mm

Please configure the Quarter-turn with insert and cam.

Note: wing or star knob not usable.

1. rotatable bottom for RH / LH

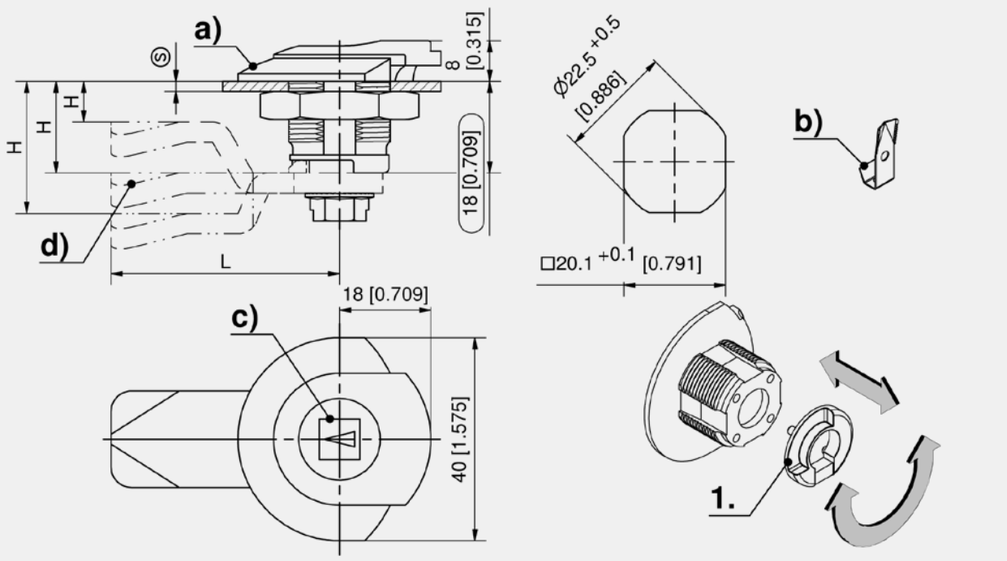

Quarter-Turn housing

	Part Number	Housing length	Grounding type	Installation type	Delivery Unit
a)	100-9007.00-00000	18 mm		screw-on	10 pcs.
b)	100-9008.00-00000	18 mm	Grounding clip	screw-on	10 pcs.

Accessories
c) 150 1-101 **Inserts Pr20.1**
d) 154, 292 1-102 **Cams L35/45 Steel**
d) 161 1-261 **Cams with Ramp**
d) 161 1-262 **Cams variable**
d) 162 1-264 **Slam-Cams**
768 6-100 **Wrench**
766 6-101 **Universal key**

Assembly options
200-0066.00-00000 **Assembling without o-ring, RH version**
200-0067.00-00000 **Assembling with o-ring, RH version**
200-0068.00-00000 **Assembling without o-ring, LH version**
200-0069.00-00000 **Assembling with o-ring, LH version**

Function extension
209-9001.00-00000 **Sealing kit IP67 for Quarter-Turns Pr20.1**
209-9002.00-00000 **Sealing kit IP65 for Quarter-Turns Pr20.1**

all product details ▸ on DIRAK.com

1-107

Quarter-Turn 2K Polyamide Pr20.1 L18

[1-092]

UL

20

R L

IP 65/67

IP 69K

PA 4Nm

RoHS WEEE

Advantages

- For cutout Pr20.1.
- Protective insulated.
- With moulded-in, captive TPE seal (under the head and inside the housing).
- IP65/67 according to DIN EN 60529.
- IP69K according to DIN 40050.
- RH / LH application.
- Insert and cam can be clipped together without tools before the installation in the housing.
- A pre-assembled quarter-turn can be installed through the cutout.

Materials

- **Housing, nut, insert and cam:** PA6, black
- **Seal:** TPE, red

Remarks

(S) Door-thickness max. 8mm.

Please configure the quarter-turn with nut, insert and cam.

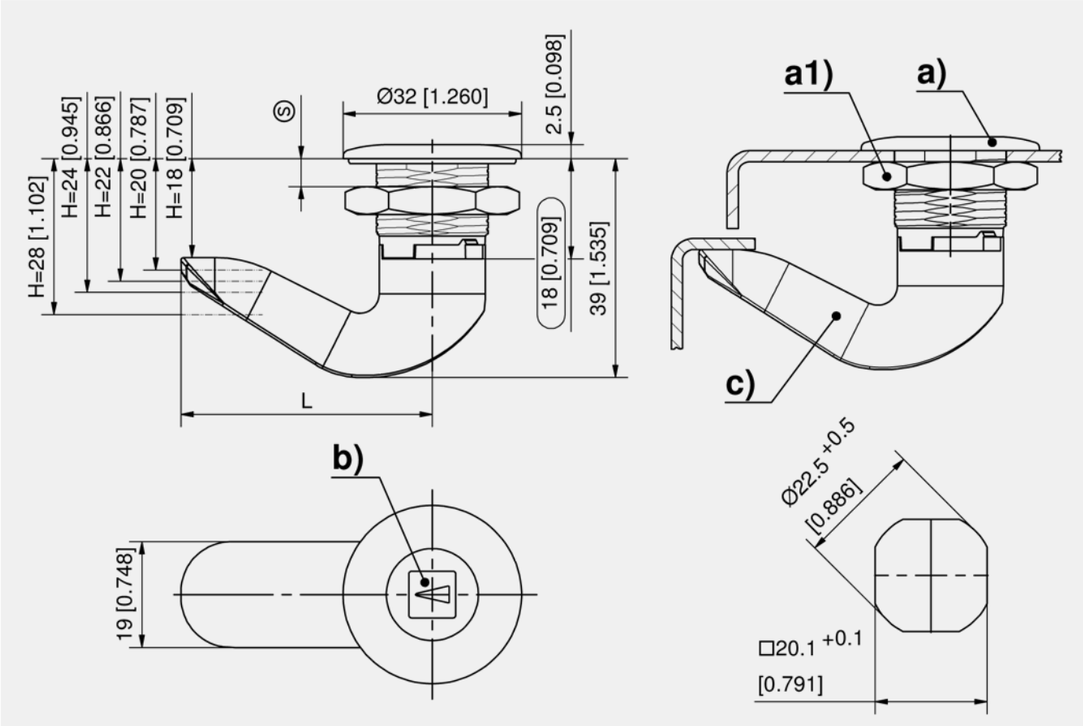

1-092

all product details on DIRAK.com

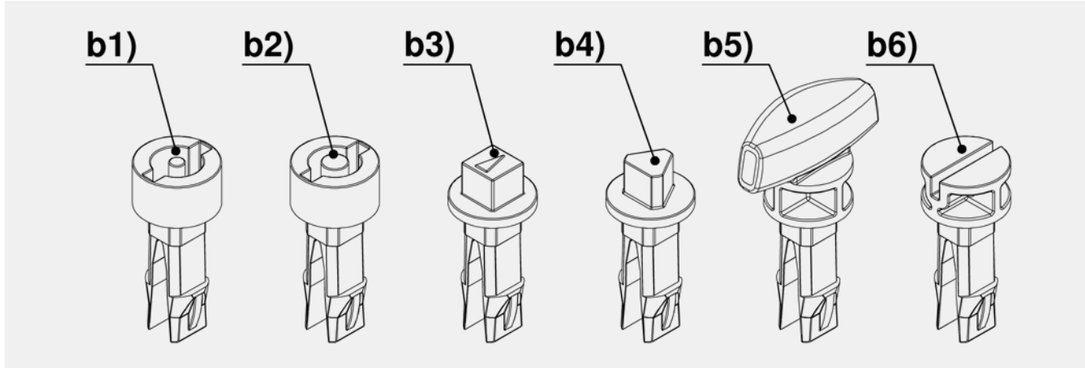

Quarter-Turn housing 2K

	Part Number	Name	Housing length	Captive seal	Installation type	Delivery Unit
a)	200-0211.07-07701	Quarter-Turn	18 mm	Yes	screw-on	50 pcs.
a1)	203-0901.03-00000	Nut			screw-on	50 pcs.

Insert 2K

	Part Number	Insert	Delivery Unit
b1)	100-0388.50-07705	Double bit 3mm pin	50 pcs.
b2)	100-0388.50-07701	Double bit 5mm pin	50 pcs.
b3)	100-0388.50-07702	Square 8mm	50 pcs.
b4)	100-0388.50-07703	Triangular 8mm	50 pcs.
b5)	100-0388.50-07707	Wing knob	50 pcs.
b6)	100-0388.50-07704	Slotted 2x4mm	50 pcs.

Cams 2K, L45, with stop

	Part Number	H-dimension	Delivery Unit
c)	200-0769.50-07718	18 mm	50 pcs.
c)	200-0769.50-07720	20 mm	50 pcs.
c)	200-0769.50-07722	22 mm	50 pcs.
c)	200-0769.50-07724	24 mm	50 pcs.
c)	200-0769.50-07728	28 mm	50 pcs.

	Accessories
170	1-270 **Dust Caps and Sealing Plug Pr20.1**
172	1-270.01 **Finger Pull for Quarter-Turn Pr20.1**
169	1-275 **Emergency Handle + Anti-Rotation Device Pr20.1**
768	6-100 **Wrench**
766	6-101 **Universal key**

Quarter-Turn Polyamide Pr20.1 L18

[1-095]

20

R L

IP 65

IP 67

PA 4Nm

RoHS WEEE

Advantages

- For cutout Pr20.1.
- Protective insulated.
- IP65/67 according to DIN EN 60529 (optional).
- RH / LH application.
- The quarter-turn can be screwed into the cutout with the pre-assembled cam.
- When using inserts zinc die + cams stainless steel or inserts stainless steel + cams stainless steel, electrical continuity can be ensured by means of the grounding clip.

Materials

- **Housing and cams:** PA, black
- **Nut:** see table

Remarks

(S) Door-thickness max. 8mm

Please configure the quarter-turn with insert and cam.

Pre-assembling by DIRAK is advisable.

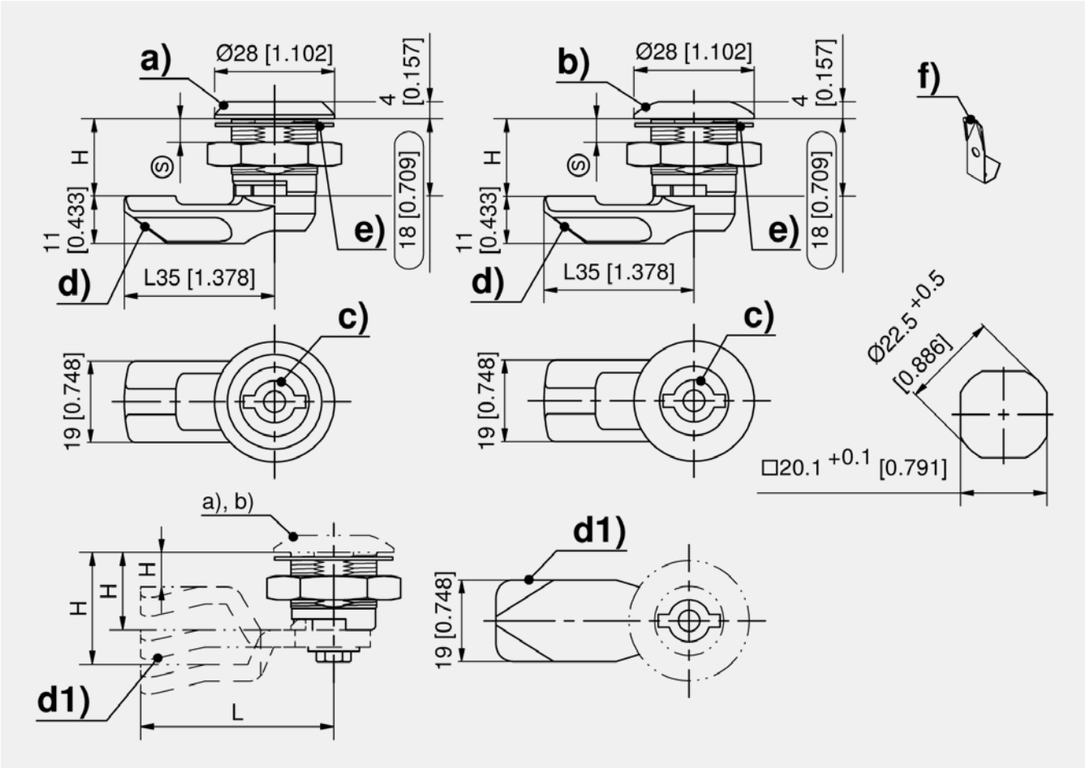

1-095

all product details on DIRAK.com

Quarter-Turn housing + nut

	Part Number	Version	Material nut	Installation type	Delivery Unit
a)	200-9003.00-00000	housing head frustoconical	steel	screw-on	10 pcs.
a)	200-9044.00-00000	housing head frustoconical	stainless steel	screw-on	10 pcs.
a)	200-9077.00-00000	housing head frustoconical	PA	screw-on	10 pcs.
b)	100-9611.00-00000	housing head rounded	steel	screw-on	10 pcs.
b)	100-9612.00-00000	housing head rounded	PA	screw-on	10 pcs.
b)	100-9614.00-00000	housing head rounded	stainless steel	screw-on	10 pcs.

Cams L35, with stop

	Part Number	H-dimension	Delivery Unit
d)	200-5318.00-00000	18 mm	10 pcs.
d)	200-5320.00-00000	20 mm	10 pcs.
d)	200-5322.00-00000	22 mm	10 pcs.
d)	200-5325.00-00000	25 mm	10 pcs.
d)	200-5328.00-00000	28 mm	10 pcs.

	Accessories
c)	150 1-101 **Inserts Pr20.1**
c)	152 7-082 **Insert Stainless Steel Pr20.1**
d1)	154, 292 1-102 **Cams L35/45 Steel**
d1)	156 7-105 **Cams L35/45 Stainless Steel**
	768 6-100 **Wrench**
	766 6-101 **Universal key**

	Assembly options
	200-0001.00-00000 **Assembling cam without o-ring**
	200-0002.00-00000 **Assembling cam with o-ring**
	200-0019.00-00000 **Assembling cam 90° to handle without o-ring**
	200-0033.00-00000 **Assembling cam 90° to handle with o-ring**

	Function extension
f)	200-1101.04-00000 **Grounding clip**
e)	209-9001.00-00000 **Sealing kit IP67 for Quarter-Turns Pr20.1**
e)	209-9002.00-00000 **Sealing kit IP65 for Quarter-Turns Pr20.1**

DIRAK

Quarter-Turn Pr20.1 L12

[1-083]

20

R L

IP 69K

15 Nm

M5 3Nm

RoHS WEEE

Advantages

- Flush version
- Housing length 12mm.
- IP69K according to DIN 40050 by using sealing kit (optional).
- RH / LH application.
- Grounding by single-sided grounding nut.
- On request parts can be assembled.
- The quarter-turn can be screwed into the cutout with the pre-assembled cam.

Materials

- **Housing and inserts:** zinc die, chrome plated or black
- **Nut:** steel, zinc plated

Remarks

(S) Door-thickness max. 3mm

Please configure the quarter-turn with insert and cam.

Attention: negatively cranked cams **cannot** be installed pre-assembled in the cutout.

1. nut
2. grounding nut

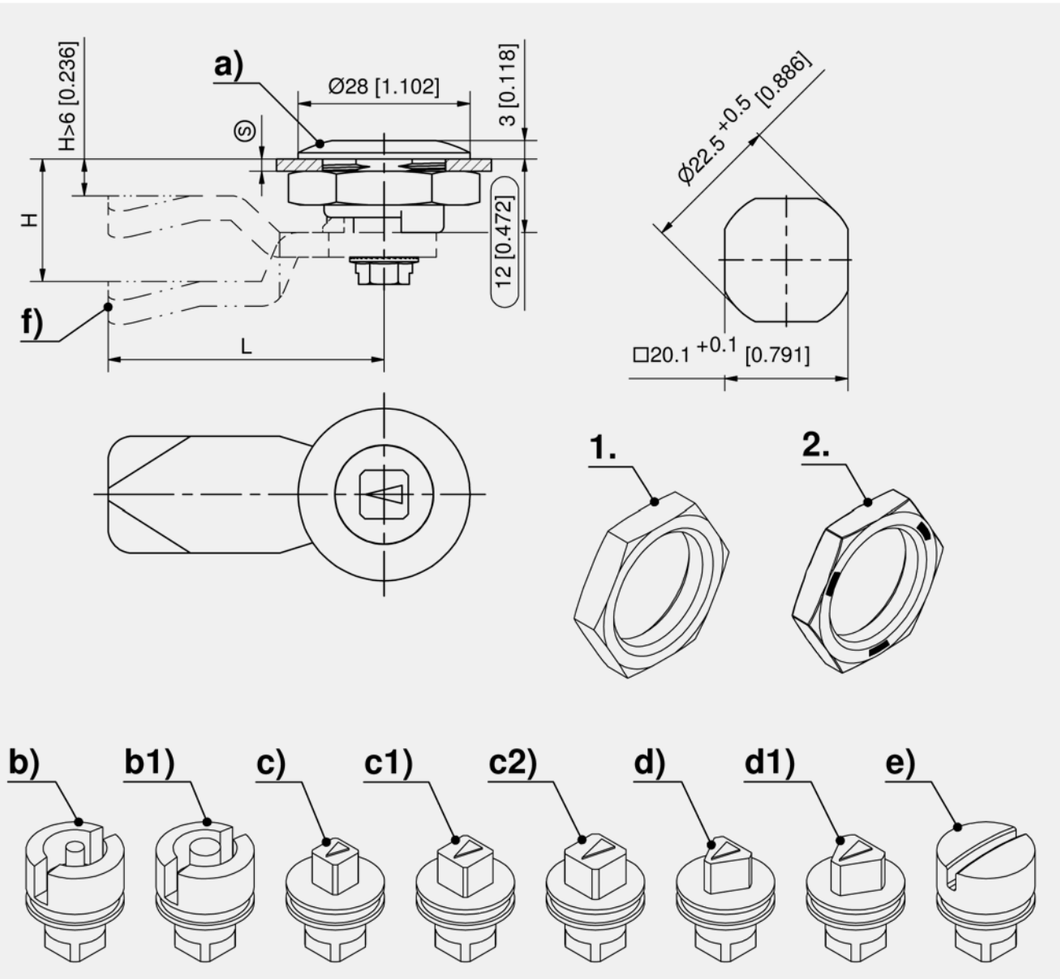

1-083

all product details on DIRAK.com

DIRAK

Quarter-Turn housing, zinc die

	Part Number	Surface	Grounding type	Installation type	Delivery Unit
a)	100-9044.00-00000	chrome plated		screw-on	10 pcs.
a)	100-9045.00-00000	chrome plated	Grounding nut	screw-on	10 pcs.
a)	100-9046.00-00000	black		screw-on	10 pcs.
a)	100-9047.00-00000	black	Grounding nut	screw-on	10 pcs.

Inserts, zinc die, for quarter-turn L12

	Part Number	Insert	Surface	Delivery Unit
b)	100-9138.00-00006	Double bit 3mm pin	chrome plated	10 pcs.
b1)	100-9138.00-00007	Double bit 5mm pin	chrome plated	10 pcs.
c)	100-9138.00-00008	Square 6mm	chrome plated	10 pcs.
c1)	100-9138.00-00009	Square 7mm	chrome plated	10 pcs.
c2)	100-9138.00-00010	Square 8mm	chrome plated	10 pcs.
d)	100-9138.00-00011	Triangular 7mm	chrome plated	10 pcs.
d1)	100-9138.00-00012	Triangular 8mm	chrome plated	10 pcs.
e)	100-9138.00-00013	Slotted 2x4mm	chrome plated	10 pcs.
b)	100-9140.00-00006	Double bit 3mm pin	black	10 pcs.
b1)	100-9140.00-00007	Double bit 5mm pin	black	10 pcs.
c)	100-9140.00-00008	Square 6mm	black	10 pcs.
c1)	100-9140.00-00009	Square 7mm	black	10 pcs.
c2)	100-9140.00-00010	Square 8mm	black	10 pcs.
d)	100-9140.00-00011	Triangular 7mm	black	10 pcs.
d1)	100-9140.00-00012	Triangular 8mm	black	10 pcs.
e)	100-9140.00-00013	Slotted 2x4mm	black	10 pcs.

Accessories
f) 154, 292 1-102 **Cams L35/45 Steel**
f) 160 1-260 **Hooked Cam**
f) 161 1-261 **Cams with Ramp**
f) 161 1-262 **Cams variable**
768 6-100 **Wrench**
766 6-101 **Universal key**

Assembly options
200-0001.00-00000 **Assembling cam without o-ring**
200-0002.00-00000 **Assembling cam with o-ring**

Function extension
209-9002.00-00000 **Sealing kit IP69K for Quarter-Turns Pr20.1**

DST Quarter-Turn Pr32x20 L18

[1-083DST]

Advantages

- Flush quarter-turn for cutout 32x20mm.
- Rectangular cutout guarantees a perfect alignment.
- IP65 according to DIN EN 60529 (O-Ring for housing is included). O-Ring 200-1001.00-00000, for insert, please order separately.
- RH / LH application by rotatable bottom part.
- Grounding by grounding clip (optional).
- On request parts can be pre-assembled.
- The quarter-turn can be snapped-in as a completely pre-assembled unit.
- Installation tool-less and vibration-proof.
- Blind installation in closed profiles.

Materials

- **Housing:** PA, black or zinc die, chrome plated
- **Snap wedges:** sintered steel
- **O-ring:** NBR, black

Remarks

Attention: H-dimension of the cam not less than 12mm!

Please configure the quarter-turn with insert and cam.

1. o-ring
2. rotatable bottom for RH/LH

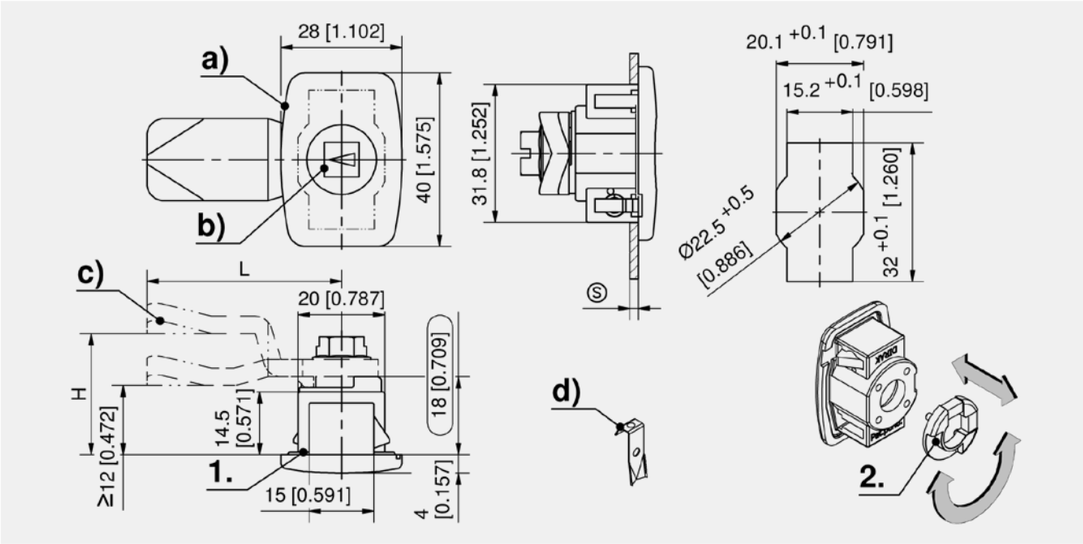

Quarter-Turn housing

	Part Number	Clamping range (S)	Material	Surface	Delivery Unit
a)	406-9005.00-00013	1.0 - 1.7 mm	PA	black	10 pcs.
a)	406-9005.00-00016	1.3 - 2.0 mm	PA	black	10 pcs.
a)	406-9005.00-00018	1.5 - 2.2 mm	PA	black	10 pcs.
a)	406-9005.00-00021	1.8 - 2.5 mm	PA	black	10 pcs.
a)	406-9005.00-00026	2.3 - 3.0 mm	PA	black	10 pcs.
a)	406-9005.00-00031	2.8 - 3.5 mm	PA	black	10 pcs.
a)	406-9006.00-00013	1.0 - 1.7 mm	zinc die	chrome plated	10 pcs.
a)	406-9006.00-00016	1.3 - 2.0 mm	zinc die	chrome plated	10 pcs.
a)	406-9006.00-00018	1.5 - 2.2 mm	zinc die	chrome plated	10 pcs.
a)	406-9006.00-00021	1.8 - 2.5 mm	zinc die	chrome plated	10 pcs.
a)	406-9006.00-00026	2.3 - 3.0 mm	zinc die	chrome plated	10 pcs.
a)	406-9006.00-00031	2.8 - 3.5 mm	zinc die	chrome plated	10 pcs.

Accessories
b) 150 1-101 **Inserts Pr20.1**
c) 154, 292 1-102 **Cams L35/45 Steel**
c) 161 1-262 **Cams variable**
768 6-100 **Wrench**
766 6-101 **Universal key**

Function extension
200-1001.00-00000 **O-ring 12 x 2.0mm**
d) 200-1101.04-00000 **Grounding clip**

◂ all product details on DIRAK.com
1-083DST

Quarter-Turn Pr20.1 L18

[1-100.01]

Advantages

- Flush quarter-turn for cutout Pr20.1.
- IP65/67 according to DIN EN 60529 (optional).
- RH / LH application.
- Grounding by grounding clip or grounding nut.
- On request parts can be assembled.
- The quarter-turn can be screwed into the cutout with the pre-assembled cam.

Materials

- **Housing:** zinc die, chrome plated or black
- **Nut:** steel, zinc plated
- **Grounding nut:** zinc die, untreated
- **Grounding clip:** stainless steel

Remarks

(S) Door-thickness max. 8mm

Please configure the quarter-turn with insert and cam.

1. nut
2. grounding nut
3. grounding clip

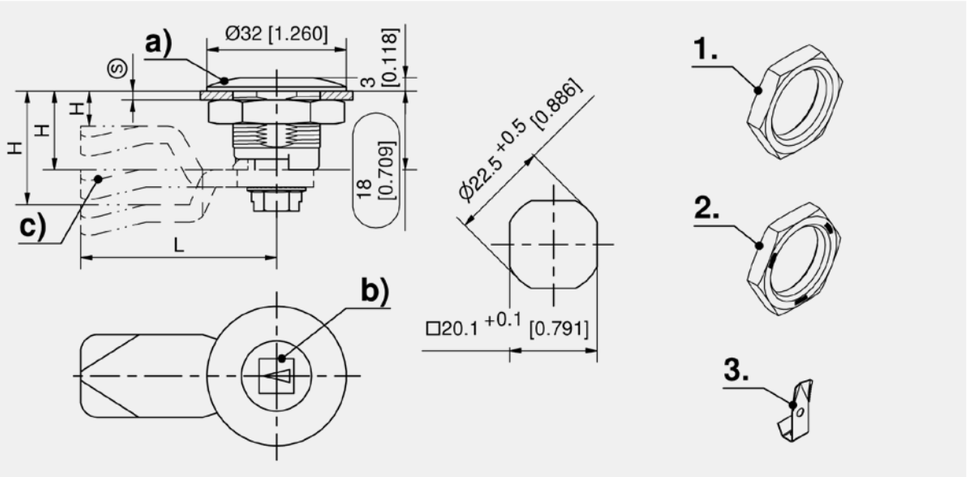

Quarter-Turn housing, zinc die Ø32

	Part Number	Surface	Grounding type	Installation type	Delivery Unit
a)	100-9053.00-00000	chrome plated		screw-on	10 pcs.
a)	100-9054.00-00000	chrome plated	Grounding nut	screw-on	10 pcs.
a)	100-9055.00-00000	chrome plated	Grounding clip	screw-on	10 pcs.
a)	100-9056.00-00000	black		screw-on	10 pcs.
a)	100-9057.00-00000	black	Grounding nut	screw-on	10 pcs.
a)	100-9058.00-00000	black	Grounding clip	screw-on	10 pcs.

Accessories
b) 150 1-101 **Inserts Pr20.1**
c) 154, 292 1-102 **Cams L35/45 Steel**
160 1-260 **Hooked Cam**
161 1-261 **Cams with Ramp**
161 1-262 **Cams variable**
167 1-115 **Handles for Quarter-turns Pr20.1**
170 1-270 **Dust Caps and Sealing Plug Pr20.1**
172 1-270.01 **Finger Pull for Quarter-Turn Pr20.1**

Accessories
169 1-275 **Emergency Handle + Anti-Rotation Device Pr20.1**
768 6-100 **Wrench**
766 6-101 **Universal key**

Assembly options
200-0001.00-00000 **Assembling cam without o-ring**
200-0002.00-00000 **Assembling cam with o-ring**

Function extension
209-9001.00-00000 **Sealing kit IP67 for Quarter-Turns Pr20.1**
209-9002.00-00000 **Sealing kit IP65 for Quarter-Turns Pr20.1**

all product details ▸ on DIRAK.com
1-100.01

DIRAK

Quarter-Turn Pr20.1 L18

[1-100]

20

R L

IP 65

IP 67

15 Nm

RoHS WEEE

Advantages

- For cutout Pr20.1.
- IP65/67 according to DIN EN 60529 (optional).
- RH / LH application.
- Grounding by grounding clip or grounding nut.
- On request parts can be assembled.
- The quarter-turn can be screwed into the cutout with the pre-assembled cam.

Materials

- **Housing:** zinc die, chrome plated or black or PA, black
- **Nuts:** steel, zinc plated
- **Grounding nut:** zinc die, untreated
- **Grounding clip:** stainless steel

Remarks

(S) Door-thickness max. 8mm

Please configure the quarter-turn with insert and cam.

1. nut
2. grounding nut
3. grounding clip

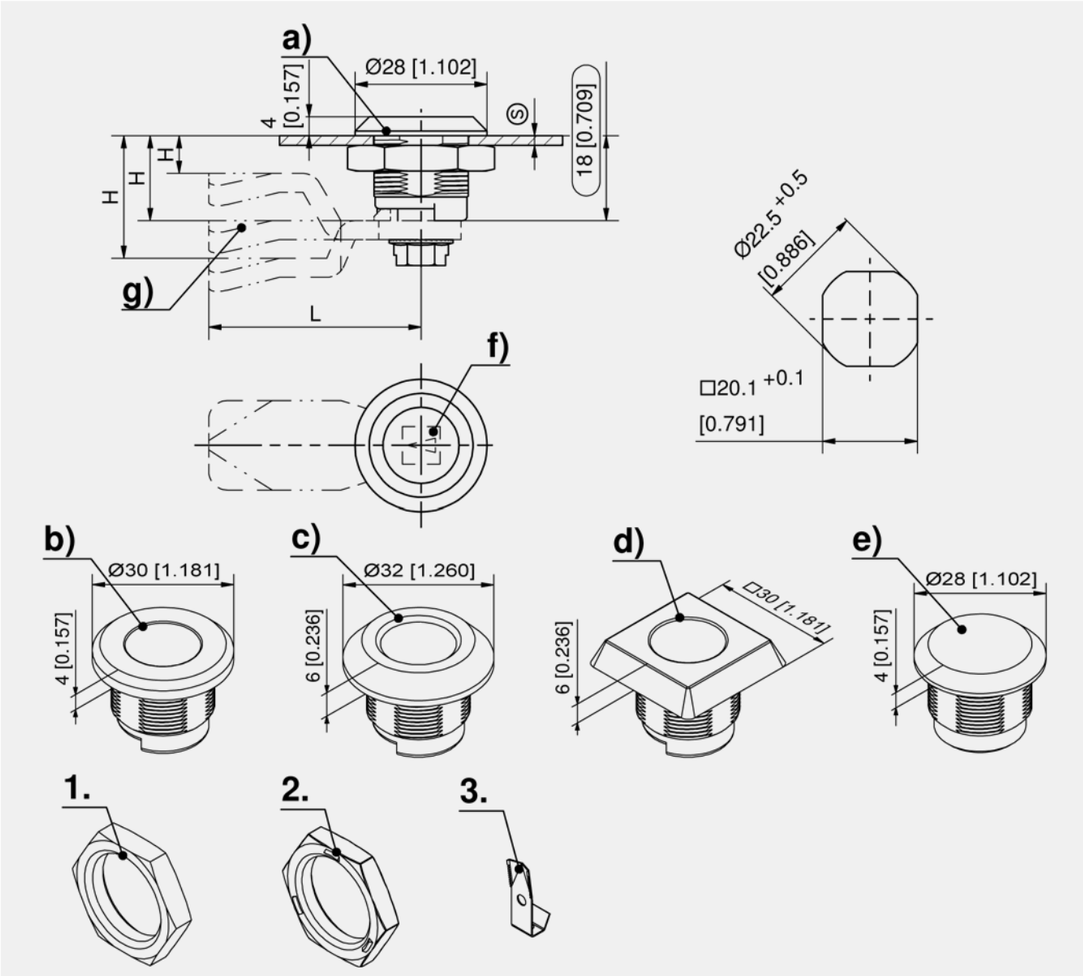

1-100

all product details on DIRAK.com

DIRAK

Quarter-Turn housing Ø28x4 + nut

	Part Number	Material	Surface	Grounding type	Installation type	Delivery Unit
a)	200-9001.00-00000	zinc die	chrome plated		screw-on	10 pcs.
a)	200-9002.00-00000	zinc die	chrome plated	Grounding nut	screw-on	10 pcs.
a)	200-9062.00-00000	zinc die	chrome plated	Grounding clip	screw-on	10 pcs.
a)	200-9048.00-00000	zinc die	black		screw-on	10 pcs.
a)	200-9049.00-00000	zinc die	black	Grounding nut	screw-on	10 pcs.
a)	200-9063.00-00000	zinc die	black	Grounding clip	screw-on	10 pcs.
a)	200-9004.00-00000	PA	black	Grounding clip	screw-on	10 pcs.

Quarter-Turn housing Ø30x4 + nut

	Part Number	Material	Surface	Grounding type	Installation type	Delivery Unit
b)	200-9045.00-00000	zinc die	chrome plated		screw-on	10 pcs.
b)	200-9046.00-00000	zinc die	chrome plated	Grounding nut	screw-on	10 pcs.
b)	200-9054.00-00000	zinc die	black		screw-on	10 pcs.
b)	200-9055.00-00000	zinc die	black	Grounding nut	screw-on	10 pcs.

Quarter-Turn housing Ø32x6 + nut

	Part Number	Material	Surface	Grounding type	Installation type	Delivery Unit
c)	200-9005.00-00000	zinc die	chrome plated		screw-on	10 pcs.
c)	200-9006.00-00000	zinc die	chrome plated	Grounding nut	screw-on	10 pcs.
c)	200-9050.00-00000	zinc die	black		screw-on	10 pcs.
c)	200-9051.00-00000	zinc die	black	Grounding nut	screw-on	10 pcs.
c)	200-9007.00-00000	PA	black		screw-on	10 pcs.
c)	200-9008.00-00000	PA	black	Grounding clip	screw-on	10 pcs.

Quarter-Turn housing □30x6 + nut

	Part Number	Material	Surface	Grounding type	Installation type	Delivery Unit
d)	200-9009.00-00000	zinc die	chrome plated		screw-on	10 pcs.
d)	200-9010.00-00000	zinc die	chrome plated	Grounding nut	screw-on	10 pcs.
d)	200-9052.00-00000	zinc die	black		screw-on	10 pcs.
d)	200-9053.00-00000	zinc die	black	Grounding nut	screw-on	10 pcs.

Quarter-Turn blind housing Ø28x4 + nut

	Part Number	Material	Surface	Installation type	Delivery Unit
e)	235-9209.00-00000	zinc die	black	screw-on	10 pcs.

Accessories

f)	150	1-101	**Inserts Pr20.1**
g)	154, 292	1-102	**Cams L35/45 Steel**
	160	1-260	**Hooked Cam**
	161	1-261	**Cams with Ramp**
	161	1-262	**Cams variable**
	167	1-115	**Handles for Quarter-turns Pr20.1**
	170	1-270	**Dust Caps and Sealing Plug Pr20.1**
	172	1-270.01	**Finger Pull for Quarter-Turn Pr20.1**
	169	1-275	**Emergency Handle + Anti-Rotation Device Pr20.1**
	768	6-100	**Wrench**
	766	6-101	**Universal key**

Assembly options

200-0001.00-00000	**Assembling cam without o-ring**
200-0002.00-00000	**Assembling cam with o-ring**
200-0019.00-00000	**Assembling cam 90° to handle without o-ring**
200-0033.00-00000	**Assembling cam 90° to handle with o-ring**

Function extension

209-9001.00-00000	**Sealing kit IP67 for Quarter-Turns Pr20.1**
209-9002.00-00000	**Sealing kit IP65 for Quarter-Turns Pr20.1**

DIRAK

Quarter-Turn Pr20.1 L18 Stainless Steel

[7-080.01]

Advantages

- Flat version.
- IP65 according to DIN EN 60529.
- IP67 according to DIN EN 60529 and IP69K according to DIN 40050 by additional o-ring (optional).
- RH / LH application.
- Grounding by grounding nut.
- On request parts can be assembled.
- The stainless steel quarter-turn can be screwed into the cutout with the pre-assembled cam.

Materials

- **Housing and grounding nut:** AISI 316
- **Serrated screw:** AISI 304
- **O-ring:** NBR

Remarks

(S) Door-thickness max. 8mm

Please configure the quarter-turn with insert and cam.

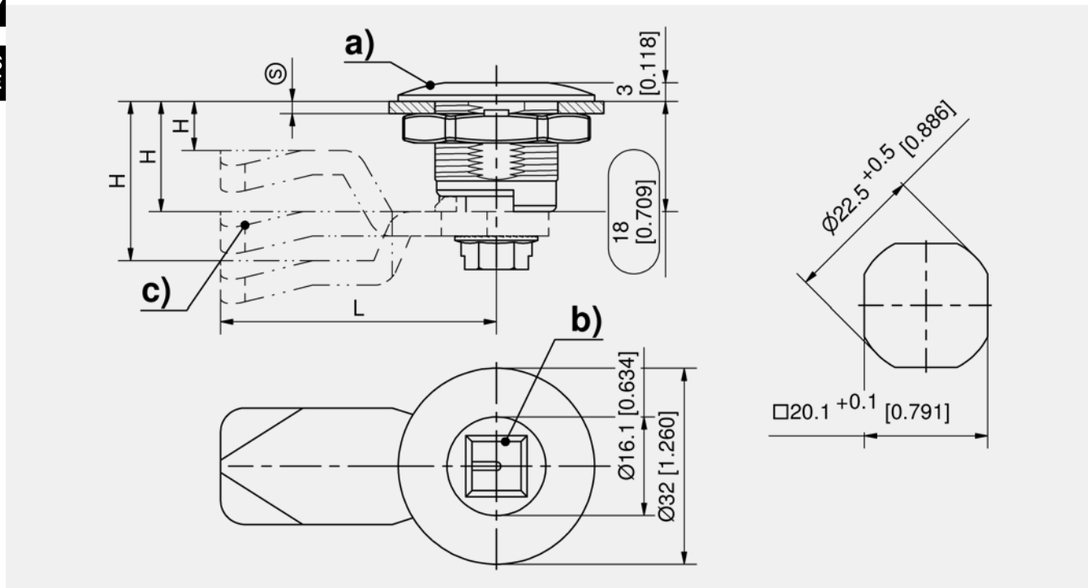

Quarter-Turn housing

	Part Number	Housing length	Installation type	Delivery Unit
a)	100-9601.00-00000	18 mm	screw-on	1 pc.

Accessories

b) 152 7-082 **Insert Stainless Steel Pr20.1**
c) 156 7-105 **Cams L35/45 Stainless Steel**
768 6-100 **Wrench**
766 6-101 **Universal key**

Assembly options

200-0002.00-00000 **Assembling cam with o-ring**

Function extension

200-1002.00-00000 **O-ring 10 x 2.0mm**

7-080.01

◂ all product details on DIRAK.com

DIRAK

Quarter-Turn Pr20.1 L36

[1-110.01]

Advantages

- Flat quarter-turn for cutout Pr20.1.
- IP65/67 according to DIN EN 60529 by sealing kit (optional).
- Grounding by grounding nut.
- RH / LH application.
- On request parts can be assembled.
- The quarter-turn can be screwed into the cutout with the pre-assembled cam.

Materials

- **Housing:** zinc die, matte chrome plated, glossy chrome plated or black
- **Nut:** steel, zinc plated
- **Grounding nut:** zinc die, untreated

Remarks

Door-thickness (S) max. 26mm

Please configure the quarter-turn with insert (adapter) and cam.

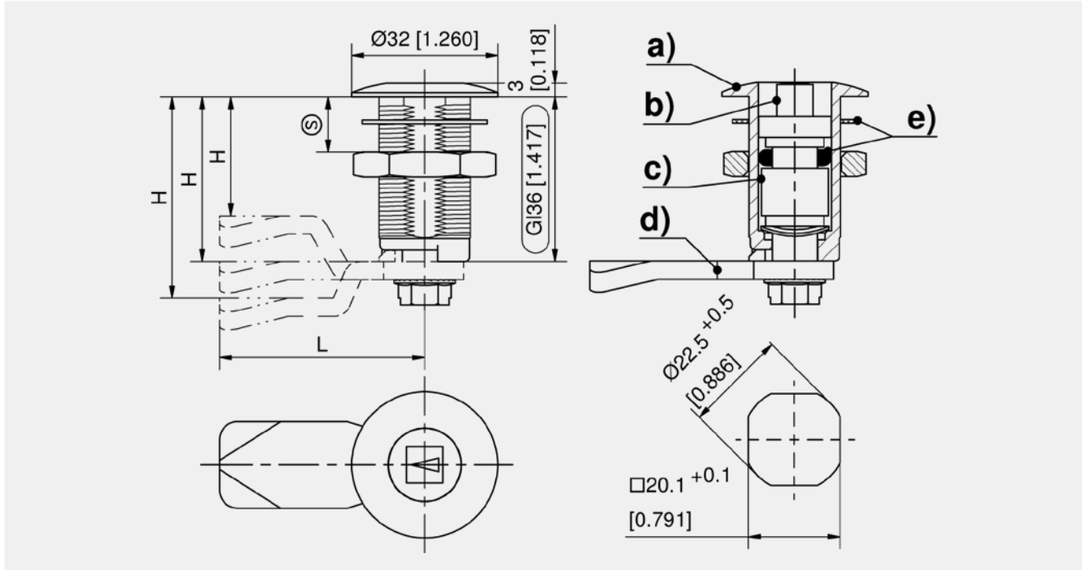

Quarter-Turn housing

	Part Number	Surface	Grounding type	Installation type	Delivery Unit
a)	100-9065.40-00036	matte chrome plated		screw-on	10 pcs.
a)	100-9065.31-00036	glossy chrome plated		screw-on	10 pcs.
a)	100-9065.00-00000	black		screw-on	10 pcs.
a)	100-9070.00-00036	matte chrome plated	Grounding nut	screw-on	10 pcs.
a)	100-9068.00-00036	glossy chrome plated	Grounding nut	screw-on	10 pcs.
a)	100-9066.00-00036	black	Grounding nut	screw-on	10 pcs.

Accessories

d) 154, 292 1-102 **Cams L35/45 Steel**
d) 160 1-260 **Hooked Cam**
d) 161 1-261 **Cams with Ramp**
d) 161 1-262 **Cams variable**
b) 150 1-101 **Inserts Pr20.1**

Function extension

e) 209-9006.00-00000 **Sealing kit IP65/IP67 for Quarter-Turns Pr20.1 L30-60**

Specific accessories

c) 100-9206.00-00024 **Adapter set L36**

all product details ▸ on DIRAK.com

1-110.01

Quarter-Turn Pr20.1 L30-60

[1-110]

Advantages

- Extended quarter-turns for cutout Pr20.1.
- IP65/67 according to DIN EN 60529 by sealing kit (optional).
- RH / LH application.
- Grounding by grounding nut.
- On request parts can be assembled.
- The Quarter-turn can be screwed into the cutout with the pre-assembled cam.

Materials

- **Housing:** zinc die, chrome plated or black
- **Nuts:** steel, zinc plated
- **Grounding nut and adapter:** zinc die, untreated

Remarks

(S) Door-thickness see table

Please configure the Quarter-turn with insert (adapter) and cam.

Negatively bent cams can not be installed pre-assembled.

By using inserts the adapter is optional, by using knobs the adapter is necessary.

1. nut

2. grounding nut

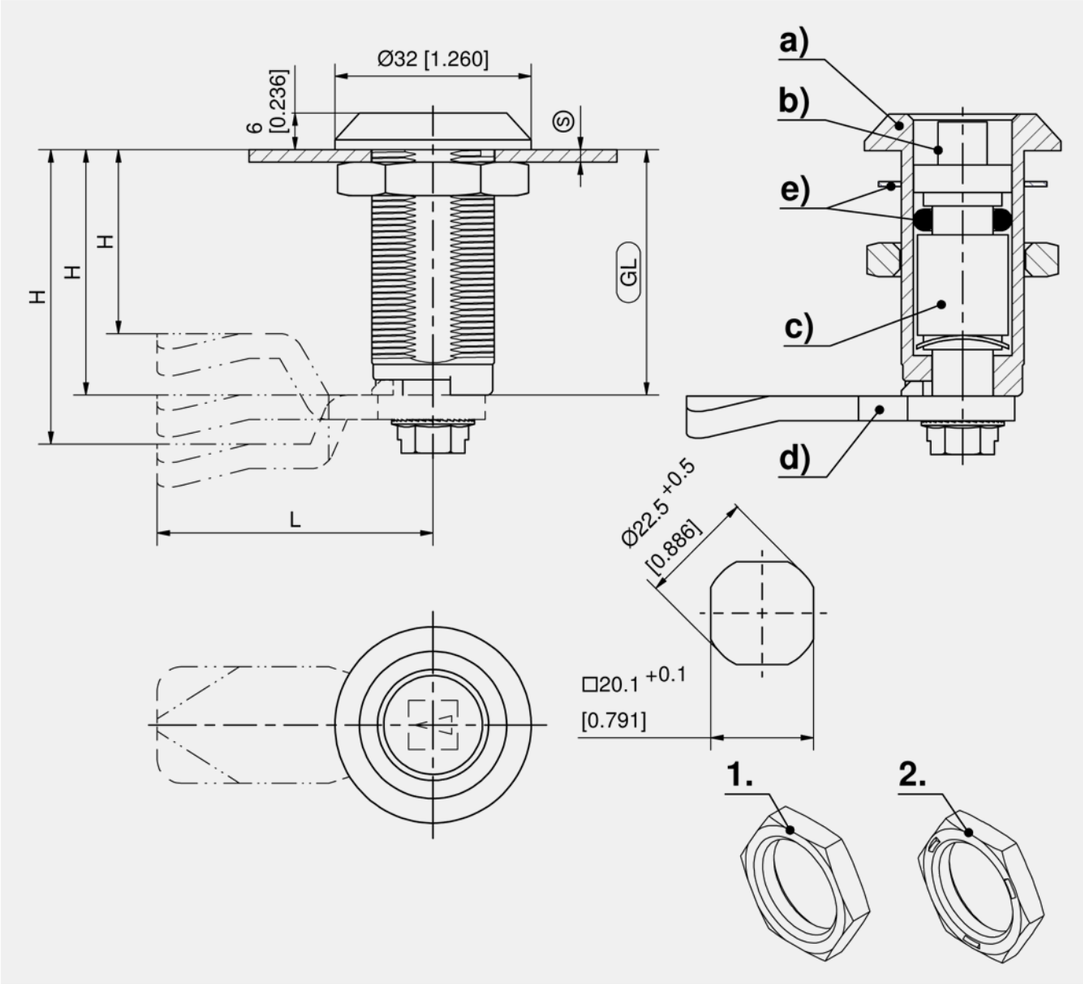

Quarter-Turn housing, zinc die, chrome plated + nut

	Part Number	Housing length	Door-thickness (S)	suitable Adapter set	Grounding type	Installation type	Delivery Unit
a)	200-9011.00-00000	30 mm	max. 20 mm	L20		screw-on	10 pcs.
a)	200-9012.00-00000	30 mm	max. 20 mm	L20	Grounding nut	screw-on	10 pcs.
a)	200-9015.00-00000	36 mm	max. 26 mm	L26		screw-on	10 pcs.
a)	200-9016.00-00000	36 mm	max. 26 mm	L26	Grounding nut	screw-on	10 pcs.
a)	200-9019.00-00000	40 mm	max. 30 mm	L30		screw-on	10 pcs.
a)	200-9020.00-00000	40 mm	max. 30 mm	L30	Grounding nut	screw-on	10 pcs.
a)	200-9023.00-00000	50 mm	max. 40 mm	L40		screw-on	10 pcs.
a)	200-9024.00-00000	50 mm	max. 40 mm	L40	Grounding nut	screw-on	10 pcs.
a)	200-9027.00-00000	60 mm	max. 50 mm	L50		screw-on	10 pcs.
a)	200-9028.00-00000	60 mm	max. 50 mm	L50	Grounding nut	screw-on	10 pcs.

Quarter-Turn housing, zinc die, black + nut

	Part Number	Housing length	Door-thickness (S)	suitable Adapter set	Grounding type	Installation type	Delivery Unit
a)	200-9013.00-00000	30 mm	max. 20 mm	L20		screw-on	10 pcs.
a)	200-9014.00-00000	30 mm	max. 20 mm	L20	Grounding nut	screw-on	10 pcs.
a)	200-9017.00-00000	36 mm	max. 26 mm	L26		screw-on	10 pcs.
a)	200-9018.00-00000	36 mm	max. 26 mm	L26	Grounding nut	screw-on	10 pcs.
a)	200-9021.00-00000	40 mm	max. 30 mm	L30		screw-on	10 pcs.
a)	200-9022.00-00000	40 mm	max. 30 mm	L30	Grounding nut	screw-on	10 pcs.
a)	200-9025.00-00000	50 mm	max. 40 mm	L40		screw-on	10 pcs.
a)	200-9026.00-00000	50 mm	max. 40 mm	L40	Grounding nut	screw-on	10 pcs.
a)	200-9029.00-00000	60 mm	max. 50 mm	L50		screw-on	10 pcs.
a)	200-9030.00-00000	60 mm	max. 50 mm	L50	Grounding nut	screw-on	10 pcs.

Accessories

b) 150 1-101 **Inserts Pr20.1**
c) 200-9031.00-00000 **Adapter set L20**
c) 200-9032.00-00000 **Adapter set L26**
c) 200-9033.00-00000 **Adapter set L30**
c) 200-9034.00-00000 **Adapter set L40**
c) 200-9035.00-00000 **Adapter set L50**
d) 154, 292 1-102 **Cams L35/45 Steel**
160 1-260 **Hooked Cam**
161 1-262 **Cams variable**
167 1-115 **Handles for Quarter-turns Pr20.1**
170 1-270 **Dust Caps and Sealing Plug Pr20.1**
172 1-270.01 **Finger Pull for Quarter-Turn Pr20.1**
169 1-275 **Emergency Handle + Anti-Rotation Device Pr20.1**
768 6-100 **Wrench**
766 6-101 **Universal key**

Assembly options

200-0003.00-00000 **Assembling adapter without o-ring**
200-0004.00-00000 **Assembling adapter, with o-ring**
200-0019.00-00000 **Assembling cam 90° to handle without o-ring**
200-0033.00-00000 **Assembling cam 90° to handle with o-ring**

Function extension

e) 209-9006.00-00000 **Sealing kit IP65/IP67 for Quarter-Turns Pr20.1 L30-60**

1-110

all product details on DIRAK.com

Quarter-Turn Pr20.1 L18-50 Stainless Steel [7-083]

Advantages

- Flat version.
- Marked red / green (padlock) on the housing top.
- Housing L18 according to IP65 DIN EN 60529. It can reach IP67 DIN EN 60529 by additional o-ring (200-1002.00-00000).
- Housings L30 to L50 can reach IP65/67 DIN EN 60529 by additional o-ring (839-3771.00-00935).
- A pre-assembled quarter-turn can be installed through the cutout.
- Grounding by grounding nut.
- RH and LH version.

Materials

- **Housing, adapter and grounding nut:** AISI 316
- **Flat external seal:** NBR

Remarks

Please configure the quarter-turn with insert and cam.

Adapter sets can consist of one or more separate extensions.

1. flat external seal
2. RH version
3. LH version

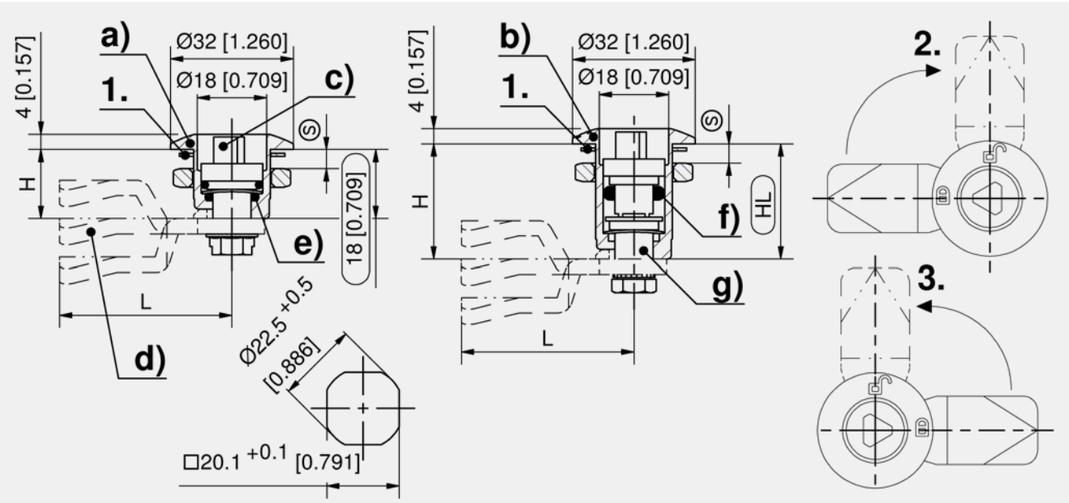

Housing with latched / unlatched indicator, flat seal and grounding nut

	Part Number	Housing length	Door-thickness (S)	Version	suitable Adapter set	Installation type	Delivery Unit
a)	100-9092.RH-00000	18 mm	max. 8 mm	RH version		screw-on	1 pc.
a)	100-9092.LH-00000	18 mm	max. 8 mm	LH version		screw-on	1 pc.
b)	100-9093.RH-00000	30 mm	max. 20 mm	RH version	L14	screw-on	1 pc.
b)	100-9093.LH-00000	30 mm	max. 20 mm	LH version	L14	screw-on	1 pc.
b)	100-9094.RH-00000	36 mm	max. 26 mm	RH version	L21	screw-on	1 pc.
b)	100-9094.LH-00000	36 mm	max. 26 mm	LH version	L21	screw-on	1 pc.
b)	100-9095.RH-00000	50 mm	max. 40 mm	RH version	L33	screw-on	1 pc.
b)	100-9095.LH-00000	50 mm	max. 40 mm	LH version	L33	screw-on	1 pc.

Accessories

c) 152 7-082 **Insert Stainless Steel Pr20.1**
d) 156 7-105 **Cams L35/45 Stainless Steel**
e) 200-1002.00-00000 **O-ring 10 x 2.0mm**
f) 839-3771.00-00935 **O-ring 9 x 3.5mm**
g) 100-9019.00-00000 **Adapter set L14**
g) 100-9020.00-00000 **Adapter set L21**
g) 100-9022.00-00000 **Adapter set L33**
768 6-100 **Wrench**
766 6-101 **Universal key**

Assembly options

200-0002.00-00000 **Assembling cam with o-ring**
200-0004.00-00000 **Assembling adapter, with o-ring**

◂ all product details on DIRAK.com
7-083

Quarter-Turn Pr20.1 L18-L60 Stainless Steel [7-080]

Advantages

- Housing L18 according to IP65 DIN EN 60529. It can reach IP67 DIN EN 60529 by additional o-ring (200-1002.00-00000).
- Housings L30 to L60 can reach IP65/67 DIN EN 60529 by additional o-ring (839-3771.00-00935).
- A pre-assembled quarter-turn can be installed through the cutout.
- Grounding by grounding nut.
- RH/LH application.

Materials

- **Housing:** AISI 303 or AISI 316
- **Grounding nut and adapter:** AISI 316
- **O-ring and flat external seal:** NBR

Remarks

Please configure the quarter-turn with insert and cam.

Adapter sets can consist of one or more separate extensions.

1. flat external seal

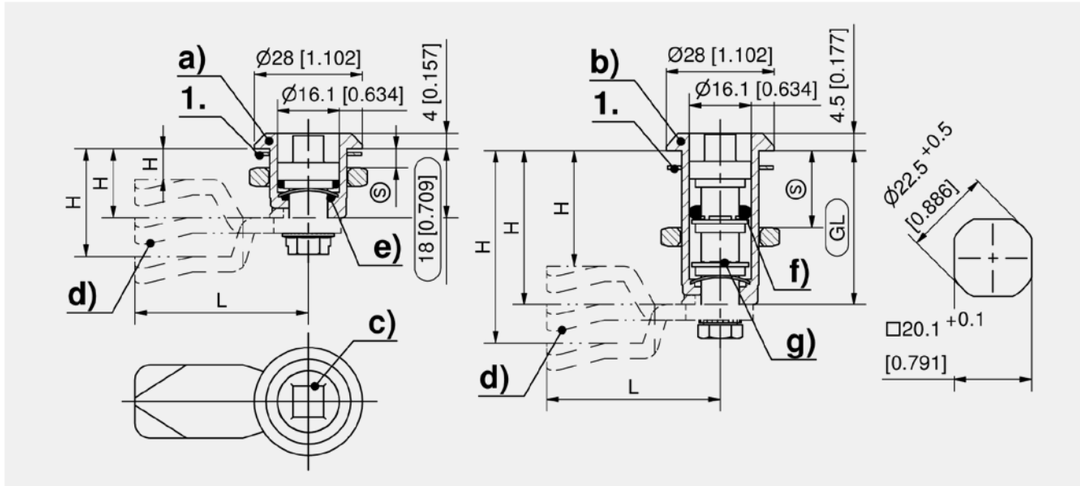

Housing with flat external seal and single sided grounding nut

	Part Number	Housing length	Door-thickness (S)	suitable Adapter set	Material	Installation type	Delivery Unit
a)	200-9043.00-00000	18 mm	max. 8 mm		AISI 316	screw-on	1 pc.
b)	200-9072.00-00000	30 mm	max. 20 mm	L14	AISI 303	screw-on	1 pc.
b)	100-9024.00-00000	36 mm	max. 26 mm	L21	AISI 303	screw-on	1 pc.
b)	200-9073.00-00000	40 mm	max. 30 mm	L25	AISI 303	screw-on	1 pc.
b)	200-9074.00-00000	50 mm	max. 40 mm	L33	AISI 303	screw-on	1 pc.
b)	200-9075.00-00000	60 mm	max. 50 mm	L44	AISI 303	screw-on	1 pc.

Accessories

c) 152 7-082 **Insert Stainless Steel Pr20.1**
d) 156 7-105 **Cams L35/45 Stainless Steel**
e) 200-1002.00-00000 **O-ring 10 x 2.0mm**
f) 839-3771.00-00935 **O-ring 9 x 3.5mm**
g) 100-9019.00-00000 **Adapter set L14**
g) 100-9020.00-00000 **Adapter set L21**
g) 100-9021.00-00000 **Adapter set L25**
g) 100-9022.00-00000 **Adapter set L33**
g) 100-9023.00-00000 **Adapter set L44**
170 1-270 **Dust Caps and Sealing Plug Pr20.1**
172 1-270.01 **Finger Pull for Quarter-Turn Pr20.1**
768 6-100 **Wrench**
766 6-101 **Universal key**

Assembly options

200-0002.00-00000 **Assembling cam with o-ring**
200-0004.00-00000 **Assembling adapter, with o-ring**

all product details ▸ on DIRAK.com
7-080

Quarter-Turn Pr20.1 with Square Threaded Rod [1-100.02]

20

R L

IP 65

15 Nm

RoHS WEEE

Advantages

- Flush quarter-turn for cutout Pr.20.1.
- Square threaded rod 40mm.
- Adjustability of the cam by the catch for standard cams 2-151.02 and 3-point cam with H-dimension adjustment 2-151.01.
- IP65 according to DIN EN 60529.
- RH / LH application.
- Grounding by grounding clip or grounding nut.

Materials

- **Housing and insert:** zinc die, chrome plated
- **Nut:** steel, zinc plated
- **Grounding nut:** zinc die, zinc plated
- **Grounding clip:** stainless steel
- **O-ring:** NBR

Remarks

(S) Door-thickness max. 8mm

Pre-assembled **without** cam.

1. 2-151.02
2. 2-151.01
3. cam

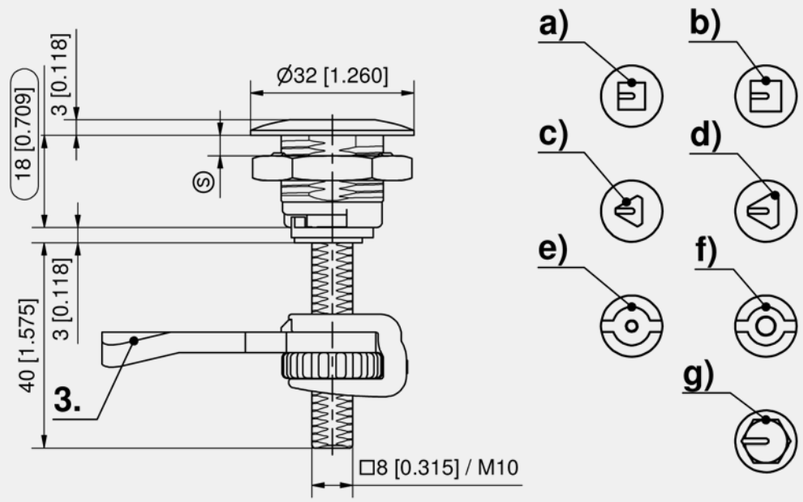

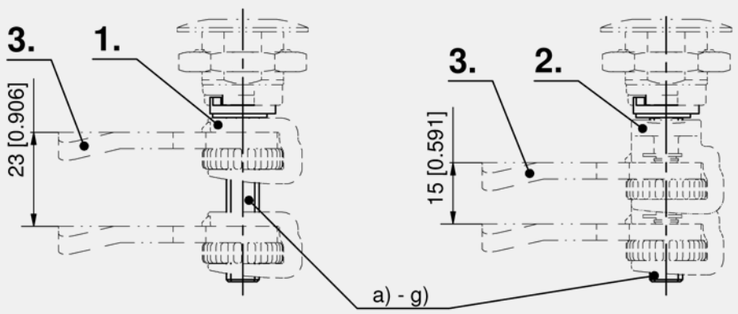

1-100.02

all product details on DIRAK.com

Quarter-Turn with insert

	Part Number	Insert	Grounding type	Installation type	Delivery Unit
a)	100-9801.00-11940	Square 7mm		screw-on	10 pcs.
b)	100-9801.00-12040	Square 8mm		screw-on	10 pcs.
c)	100-9801.00-12140	Triangular 7mm		screw-on	10 pcs.
d)	100-9801.00-12240	Triangular 8mm		screw-on	10 pcs.
e)	100-9801.00-12340	Double bit 3mm pin		screw-on	10 pcs.
f)	100-9801.00-12440	Double bit 5mm pin		screw-on	10 pcs.
g)	100-9801.00-12540	Hex. SW 11		screw-on	10 pcs.
a)	100-9802.00-11940	Square 7mm	Grounding nut	screw-on	10 pcs.
b)	100-9802.00-12040	Square 8mm	Grounding nut	screw-on	10 pcs.
c)	100-9802.00-12140	Triangular 7mm	Grounding nut	screw-on	10 pcs.
d)	100-9802.00-12240	Triangular 8mm	Grounding nut	screw-on	10 pcs.
e)	100-9802.00-12340	Double bit 3mm pin	Grounding nut	screw-on	10 pcs.
f)	100-9802.00-12440	Double bit 5mm pin	Grounding nut	screw-on	10 pcs.
g)	100-9802.00-12540	Hex. SW 11	Grounding nut	screw-on	10 pcs.
a)	100-9803.00-11940	Square 7mm	Grounding clip	screw-on	10 pcs.
b)	100-9803.00-12040	Square 8mm	Grounding clip	screw-on	10 pcs.
c)	100-9803.00-12140	Triangular 7mm	Grounding clip	screw-on	10 pcs.
d)	100-9803.00-12240	Triangular 8mm	Grounding clip	screw-on	10 pcs.
e)	100-9803.00-12340	Double bit 3mm pin	Grounding clip	screw-on	10 pcs.
f)	100-9803.00-12440	Double bit 5mm pin	Grounding clip	screw-on	10 pcs.
g)	100-9803.00-12540	Hex. SW 11	Grounding clip	screw-on	10 pcs.

+	Accessories
154, 292	1-102 **Cams L35/45 Steel**
179, 283	1-170 **Round Rods with Eye**
180, 284	1-180 **Round Rods for Adapter**
184, 288	1-191 **Height-adjustable Rod Guide RS**
178, 298	2-151.01 **3-Point Adapter with Adjustment**
173, 300	2-151.02 **Adjustment**
768	6-100 **Wrench**
766	6-101 **Universal key**

Quarter-Turn with Conical Square Insert Pr20.1 L18 [1-210]

20 | R L | IP 65 | 15 Nm | RoHS WEEE

Advantages

- IP65 according to DIN EN 60529 by sealing kit (optional).
- RH / LH application.
- On request parts can be assembled by DIRAK.
- A pre-assembled quarter-turn can be installed in the cutout.

Materials

- **Housing:** zinc die, chrome plated or black
- **Nut:** steel, zinc plated
- **Insert:** steel, zinc plated, or zinc die, chrome plated

Remarks

(S) Door-thickness max. 8mm

Please configure the quarter-turn with insert and cam.

On request parts can be assembled by DIRAK.

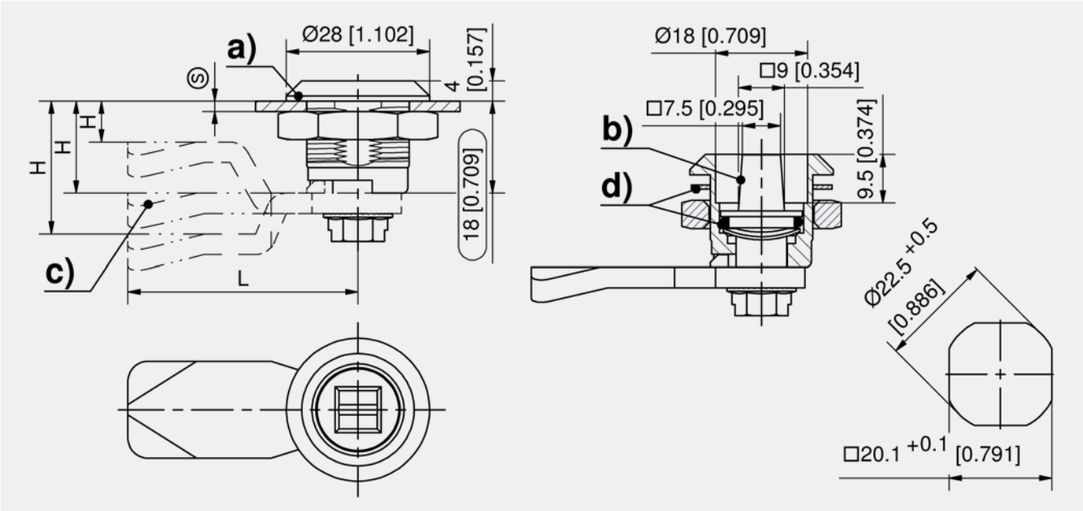

Quarter-Turn housing, zinc die

	Part Number	Surface	Housing length	Installation type	Delivery Unit
a)	200-9065.00-00000	chrome plated	18 mm	screw-on	10 pcs.
a)	200-9086.00-00000	black	18 mm	screw-on	10 pcs.

Inserts

	Part Number	Insert	Material	Surface	Delivery Unit
b)	200-9138.00-00000	Conical square 9mm	zinc die	chrome plated	10 pcs.
b)	200-9175.00-00000	Conical square 9mm	steel	zinc plated	10 pcs.
b)	200-9183.00-00000	Conical square 9mm	steel	chrome plated	10 pcs.

Accessories

c) 154, 292 1-102 **Cams L35/45 Steel**
c) 161 1-262 **Cams variable**
770 6-105 **Keys for the Railway Sector**

Assembly options

200-0001.00-00000 **Assembling cam without o-ring**
200-0002.00-00000 **Assembling cam with o-ring**

Function extension

d) 209-9002.00-00000 **Sealing kit IP65 for Quarter-Turns Pr20.1**

all product details on DIRAK.com
1-210

Cylinder Quarter-Turn Polyamide Pr20.1 L18 [1-121]

20 | R L | IP 65/67 | IP 65 | PA 4Nm | RoHS WEEE

Advantages

- For cutout Pr20.1.
- Protective insulated and vibration-proof.
- IP65 according to DIN EN 60529 by dust cap 200-4101 (optional).
- IP65/67 according to DIN EN 60529 by dust cap 200-4103 (optional).
- RH / LH application.
- The quarter-turn can be screwed into the cutout with the pre-assembled cam.
- 2 keys included in scope of delivery.

Materials

- **Housing:** PA, black
- **Nut:** PA, black, steel, zic plated or stainless steel

Remarks

(S) Door-thickness max. 8mm

Completely pre-assembled **without** cam.

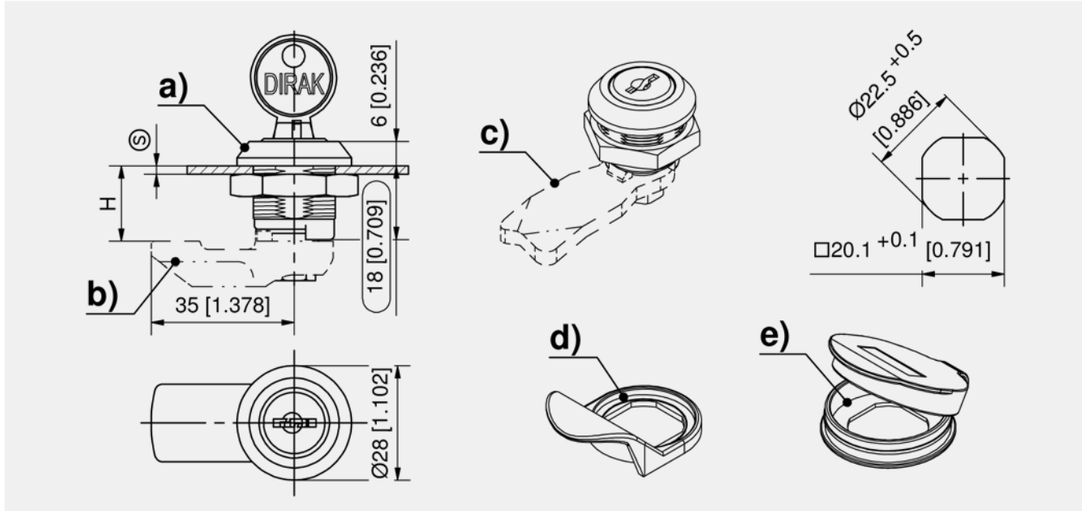

Cylinder quarter-turn

	Part Number	Latching type	Surface nut	Installation type	Delivery Unit
a)	200-9210.00-00000	keyed alike DIRAK 1333	black	screw-on	1 pc.
a)	200-9211.00-00000	keyed alike DIRAK 1333	zinc plated	screw-on	1 pc.
a)	200-9212.00-00000	keyed alike DIRAK 1333	stainless steel	screw-on	1 pc.
a)	200-9213.00-00000	keyed different	black	screw-on	1 pc.
a)	200-9214.00-00000	keyed different	zinc plated	screw-on	1 pc.
a)	200-9215.00-00000	keyed different	stainless steel	screw-on	1 pc.

Accessories

b) 71 200-5318.00-00000 **PA cam, L35mm / H18mm**
b) 71 200-5320.00-00000 **PA cam, L35mm / H20mm**
b) 71 200-5322.00-00000 **PA cam, L35mm / H22mm**
b) 71 200-5325.00-00000 **PA cam, L35mm / H25mm**
b) 71 200-5328.00-00000 **PA cam, L35mm / H28mm**
c) 154, 292 1-102 **Cams L35/45 Steel**
c) 160 1-260 **Hooked Cam**
d) 172 1-270.01 **Finger Pull for Quarter-Turn Pr20.1**

Assembly options

200-0001.00-00000 **Assembling cam without o-ring**

Function extension

e) 170 200-4101.00-00000 **Dust cap**
e) 170 200-4103.00-00000 **Dust cap**

all product details on DIRAK.com
1-121

Cylinder Quarter-Turn Pr20.1 L18

[1-120]

Advantages

- For cutout Pr20.1.
- IP65 according to DIN EN 60529 by dust cap 200-4101 (optional).
- IP65/67 according to DIN EN 60529 by dust cap 200-4103 (optional).
- RH / LH application.
- Grounding by grounding nut.
- The quarter-turn can be screwed into the cutout with the pre-assembled cam.
- 2 keys included.
- With stainless steel cylinder cover and dust-shutter.

Materials

- **Housing:** zinc die, chrome plated or black
- **Grounding nut:** stainless steel

Remarks

(S) Door-thickness max. 8mm

Completely pre-assembled **without** cam.

Maximum load for the key 4Nm.

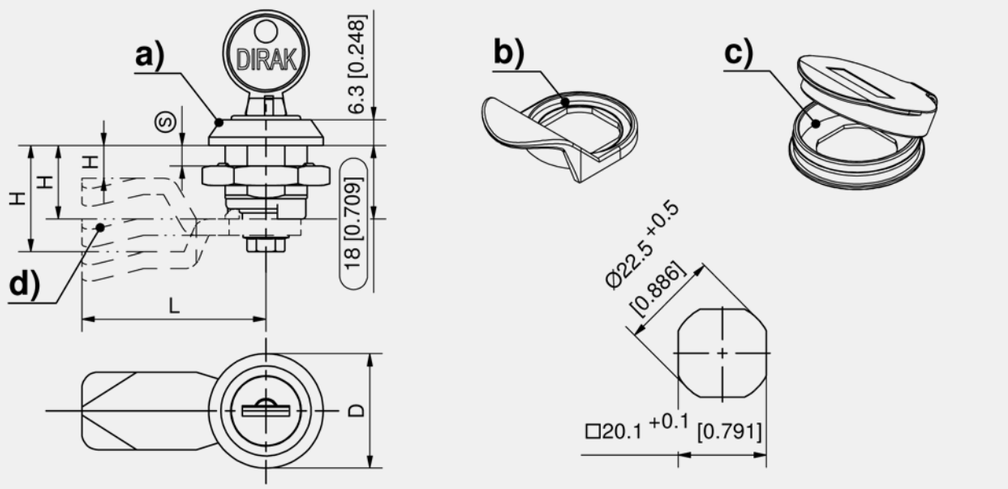

Cylinder quarter-turn, zinc die

	Part Number	Head diameter	Latching type	Surface	Installation type	Delivery Unit
a)	200-9201.00-00000	Ø28	keyed alike DIRAK 1333	chrome plated	screw-on	1 pc.
a)	500-9201.00-00000	Ø28	keyed alike DS200	chrome plated	screw-on	1 pc.
a)	200-9203.00-00000	Ø28	keyed different	chrome plated	screw-on	1 pc.
a)	200-9202.00-00000	Ø28	keyed alike DIRAK 1333	black	screw-on	1 pc.
a)	500-9202.00-00000	Ø28	keyed alike DS200	black	screw-on	1 pc.
a)	200-9204.00-00000	Ø28	keyed different	black	screw-on	1 pc.
a)	200-9205.00-00000	Ø32	keyed alike DIRAK 1333	chrome plated	screw-on	1 pc.
a)	500-9205.00-00000	Ø32	keyed alike DS200	chrome plated	screw-on	1 pc.
a)	200-9207.00-00000	Ø32	keyed different	chrome plated	screw-on	1 pc.
a)	200-9206.00-00000	Ø32	keyed alike DIRAK 1333	black	screw-on	1 pc.
a)	500-9206.00-00000	Ø32	keyed alike DS200	black	screw-on	1 pc.
a)	200-9208.00-00000	Ø32	keyed different	black	screw-on	1 pc.

Accessories

b) 172 1-270.01 **Finger Pull for Quarter-Turn Pr20.1**
c) 170 200-4101.00-00000 **Dust cap**
c) 170 200-4103.00-00000 **Dust cap**
d) 154, 292 1-102 **Cams L35/45 Steel**
d) 161 1-262 **Cams variable**

Assembly options

200-0001.00-00000 **Assembling cam without o-ring**

1-120

◂ all product details on DIRAK.com

Cylinder Quarter-Turn Pr20.1 L18 Stainless Steel

[7-084]

Advantages

- For cutout 20.1.
- Grounding by grounding nut.
- **Version a)**
- RH / LH application.
- For stability the cam is secured by a nut DIN 934.
- **Version b)**
- RH and LH version.
- To insure it turns freely, the slam-cam is secured by a shoulder screw.

Materials

- **Housing, grounding nut, adapter and hexagon nut:** AISI 316
- **Spring washer:** AISI 301
- **Cylinder barre:** stainless steel

Remarks

(S) Door-thickness max. 8mm

IP65 according to DIN EN 60529 only **with** dustcap, see product system 1-270.

1. mounting position of the spring washer

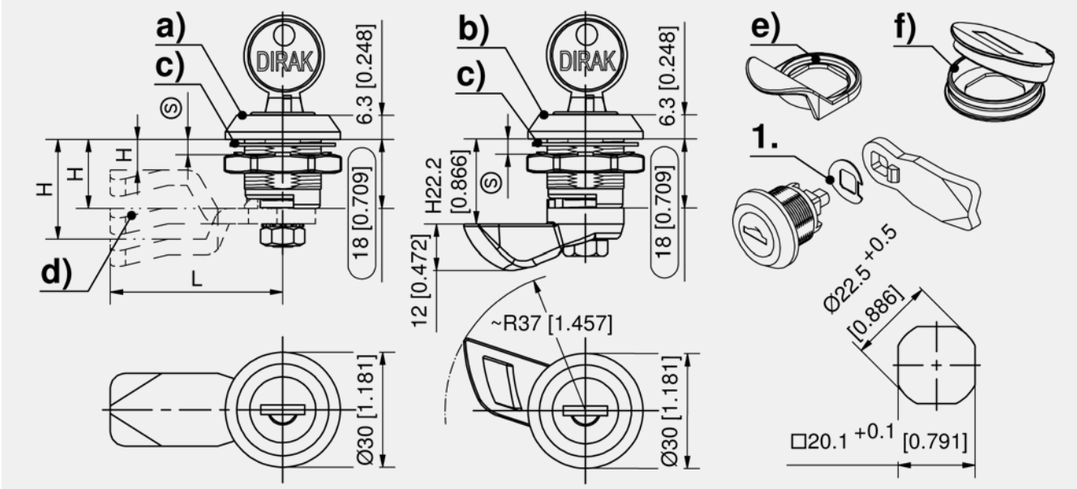

Cylinder quarter-turn

	Part Number	Latching type	Installation type	Delivery Unit
a)	200-9232.00-00000	keyed alike DIRAK 1333	screw-on	1 pc.
a)	200-9233.00-00000	keyed different	screw-on	1 pc.

Cylinder quarter-turn with slam cam

	Part Number	Latching type	Version	Installation type	Delivery Unit
b)	200-9236.00-01333	keyed alike DIRAK 1333	RH version	screw-on	1 pc.
b)	200-9236.00-99999	keyed different	RH version	screw-on	1 pc.
b)	200-9237.00-01333	keyed alike DIRAK 1333	LH version	screw-on	1 pc.
b)	200-9237.00-99999	keyed different	LH version	screw-on	1 pc.

Accessories

c) 200-0901.00-00000 **Flat external seal 20.1, Ø22.5mm**
d) 156 7-105 **Cams L35/45 Stainless Steel**
e) 172 1-270.01 **Finger Pull for Quarter-Turn Pr20.1**
f) 170 1-270 **Dust Caps and Sealing Plug Pr20.1**

all product details ▸ on DIRAK.com

7-084

DST Cylinder Quarter-Turn Pr32x20 L22

[1-120DST]

Advantages

- Flush quarter-turn for cutout 32x20mm.
- Rectangular cutout guarantees a perfect alignment.
- The rotatable bottom can be positioned in any 90° position, making the bit of the key always pointing in the same direction for both RH and LH doors.
- RH / LH application.
- The quarter-turn can be snapped-in as a completely pre-assembled unit.
- Installation tool-less and vibration-proof.
- Blind installation in closed profiles.
- 2 keys included.
- With stainless cylinder cover and dust-shutter.

Materials

- **Housing and cylinder:** zinc die, chrome plated
- **Snap wedges:** sintered steel
- **Loose bottom:** zinc die, zinc plated
- **Serrated screw:** steel, zinc plated
- **O-ring:** NBR, black, serves as security for the snap wedges

Remarks

H-dimension of the cam L=35 ≥12mm

H-dimension of the cam L=45 ≥6mm

Maximum load for the key 4Nm.

Completely pre-assembled **without** cam.

Grounding by grounding clip 200-1103.04.00000 on request.

1. rotatable bottom for RH/LH

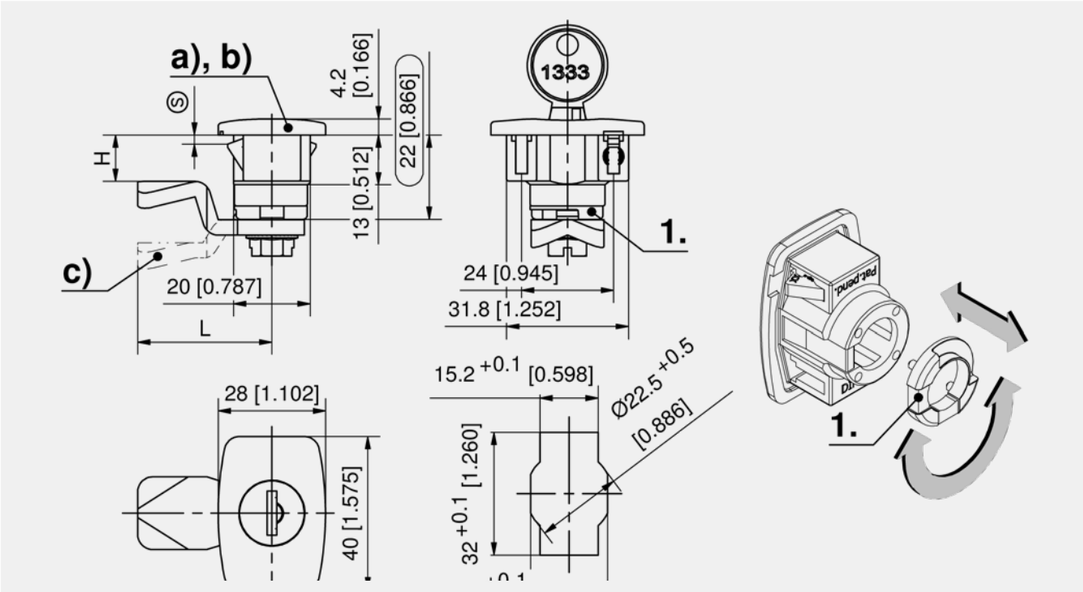

Cylinder quarter-turn, zinc die

	Part Number	Clamping range (S)	Latching type	Surface	Installation type	Delivery Unit
a)	406-9007.00-00013	1.0 - 1.7 mm	keyed alike DIRAK 1333	chrome plated	tool-less	1 pc.
a)	406-9007.00-00018	1.5 - 2.2 mm	keyed alike DIRAK 1333	chrome plated	tool-less	1 pc.
a)	406-9007.00-00026	2.3 - 3.0 mm	keyed alike DIRAK 1333	chrome plated	tool-less	1 pc.
b)	406-9008.00-00013	1.0 - 1.7 mm	keyed different	chrome plated	tool-less	1 pc.
b)	406-9008.00-00018	1.5 - 2.2 mm	keyed different	chrome plated	tool-less	1 pc.
b)	406-9008.00-00026	2.3 - 3.0 mm	keyed different	chrome plated	tool-less	1 pc.
a)	406-9009.00-00013	1.0 - 1.7 mm	keyed alike DIRAK 1333	black	tool-less	1 pc.
a)	406-9009.00-00018	1.5 - 2.2 mm	keyed alike DIRAK 1333	black	tool-less	1 pc.
a)	406-9009.00-00026	2.3 - 3.0 mm	keyed alike DIRAK 1333	black	tool-less	1 pc.
b)	406-9010.00-00013	1.0 - 1.7 mm	keyed different	black	tool-less	1 pc.
b)	406-9010.00-00018	1.5 - 2.2 mm	keyed different	black	tool-less	1 pc.
b)	406-9010.00-00026	2.3 - 3.0 mm	keyed different	black	tool-less	1 pc.

Accessories

c) 154, 292 1-102 **Cams L35/45 Steel**
c) 161 1-262 **Cams variable**

all product details on DIRAK.com
1-120DST

Cylinder Quarter-Turn Pr20.1 L30-50

[1-120.01]

Advantages

- Flush cylinder quarter-turn for cutout Pr20.1.
- Different housing lengths.
- IP65 according to DIN EN 60529 by dust cap 200-4101 (optional).
- IP65/IP67 according to DIN EN 60529 by dust cap 200-4103 (optional).
- RH / LH application.
- The quarter-turn can be screwed into the cutout with the pre-assembled cam.
- 2 keys are included in the scope of delivery.
- With stainless cylinder cover and dust-shutter.

Materials

- **Housing:** zinc die, chrome plated or black
- **Nut and serrated screw:** steel, zinc plated
- **Adapter:** zinc die, untreated

Remarks

Completely pre-assembled **without** cam.

Negatively bent cams can **not** be installed pre-assembled

Maximum load for the key 4 Nm.

1. dust-shutter

2. cylinder cover

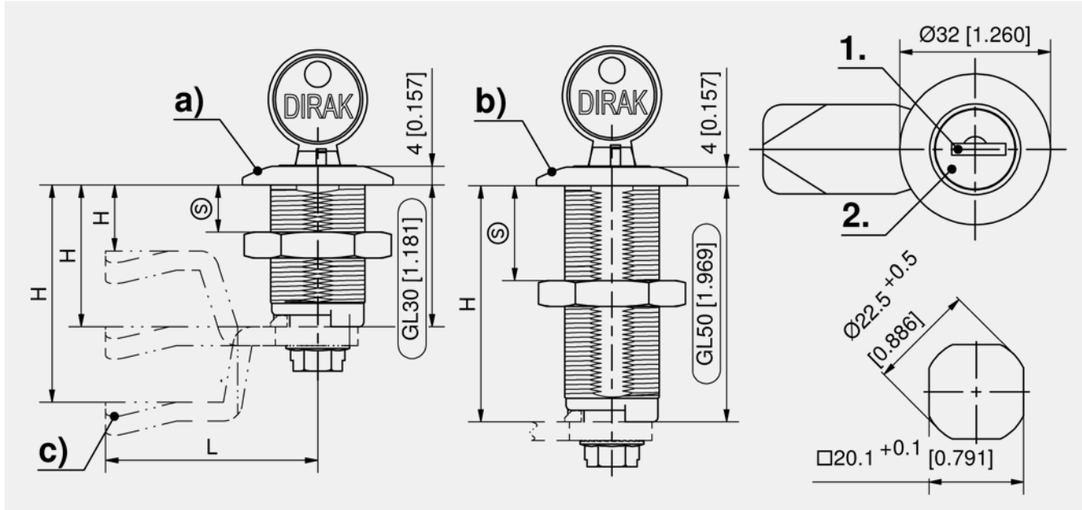

Cylinder quarter-turn, zinc die

	Part Number	Housing length	Latching type	Door-thickness (S)	Surface	Installation type	Delivery Unit
a)	100-9081.00-10030	30 mm	keyed alike DIRAK 1333	max. 20 mm	chrome plated	screw-on	1 pc.
b)	100-9081.00-10050	50 mm	keyed alike DIRAK 1333	max. 40 mm	chrome plated	screw-on	1 pc.
a)	100-9081.00-20030	30 mm	keyed alike DIRAK 1333	max. 20 mm	black	screw-on	1 pc.
b)	100-9081.00-20050	50 mm	keyed alike DIRAK 1333	max. 40 mm	black	screw-on	1 pc.
a)	100-9082.00-10030	30 mm	keyed different	max. 20 mm	chrome plated	screw-on	1 pc.
b)	100-9082.00-10050	50 mm	keyed different	max. 40 mm	chrome plated	screw-on	1 pc.
a)	100-9082.00-20030	30 mm	keyed different	max. 20 mm	black	screw-on	1 pc.
b)	100-9082.00-20050	50 mm	keyed different	max. 40 mm	black	screw-on	1 pc.
a)	100-9083.00-10030	30 mm	keyed alike DS200	max. 20 mm	chrome plated	screw-on	1 pc.
b)	100-9083.00-10050	50 mm	keyed alike DS200	max. 40 mm	chrome plated	screw-on	1 pc.
a)	100-9083.00-20030	30 mm	keyed alike DS200	max. 20 mm	black	screw-on	1 pc.
b)	100-9083.00-20050	50 mm	keyed alike DS200	max. 40 mm	black	screw-on	1 pc.

Accessories

c) 154, 292 1-102 **Cams L35/45 Steel**
c) 161 1-262 **Cams variable**
170 1-270 **Dust Caps and Sealing Plug Pr20.1**
172 1-270.01 **Finger Pull for Quarter-Turn Pr20.1**

Assembly options

200-0001.00-00000 **Assembling cam without o-ring**

all product details on DIRAK.com
1-120.01

Quarter-Turn with Combination Lock Pr20.1 L18 [1-125]

Advantages

- For cutout Pr20.1.
- IP65 according to DIN EN 60529.
- RH / LH application.
- Grounding by grounding nut.
- O-ring on handle improves grip.
- For combination set or reset please refer to enclosed instructions.
- Modifying the combination **just** in open state possible.
- The quarter-turn can be screwed into the cutout with the pre-assembled cam.

Materials

- **Handle and housing:** zinc die, chrome plated or black
- **O-ring:** Perbunan
- **Grounding nut:** zinc die, untreated

Remarks

(S) Door-thickness max. 8mm

Completely pre-assembled **without** cam.

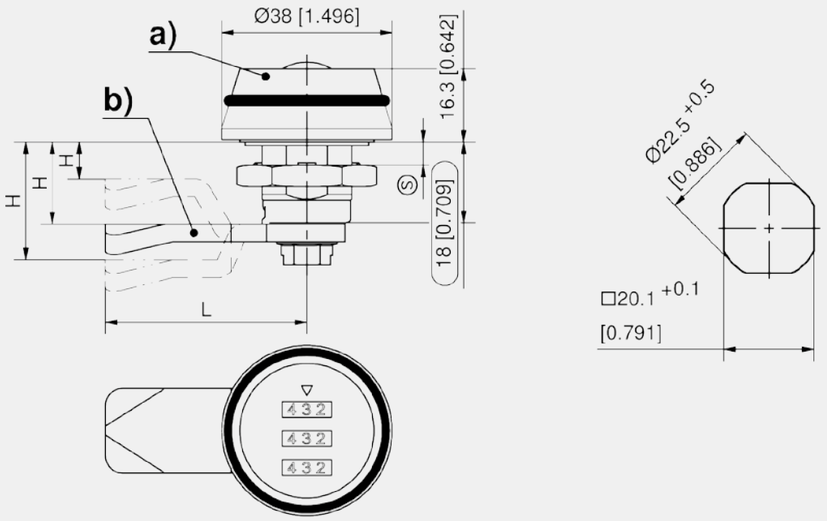

Quarter-Turn, zinc die

	Part Number	Surface	Housing length	Installation type	Delivery Unit
a)	100-9301.00-00000	chrome plated	18 mm	screw-on	10 pcs.
a)	100-9302.00-00000	black	18 mm	screw-on	10 pcs.

	Accessories
b)	154, 292 1-102 **Cams L35/45 Steel**

1-125

◂ all product details on DIRAK.com

Quarter-Turn with Stepped Cam Pr20.1 L18-60 [1-200]

Advantages

- Quarter-turn for large tolerances and greater compression possibilities.
- The locking direction is always clockwise.
- When installed, the arrow must point to the frame. In this case the flat side of the cam is parallel to the frame.
- Marking of housing -" Auf/Zu" (Open/Closed).
- IP65/67 according to DIN EN 60529 by using sealing kit (optional).
- RH / LH application.
- Housing extension f) for increasing the housing length by 5mm.

Materials

- **Housing:** zinc die, chrome plated
- **Nut:** steel, zinc plated
- **Adapter, stepped cam and housing extension:** zinc die, untreated

Remarks

(S) Door-thickness see table

Sealing kit **g)** for GL18: 209-9002

Sealing kit **h)** from GL30: 209-9006

When using knobs the adapter is necessary.

Please configure the quarter-turn with insert and cam.

1. arrow pointing towards frame

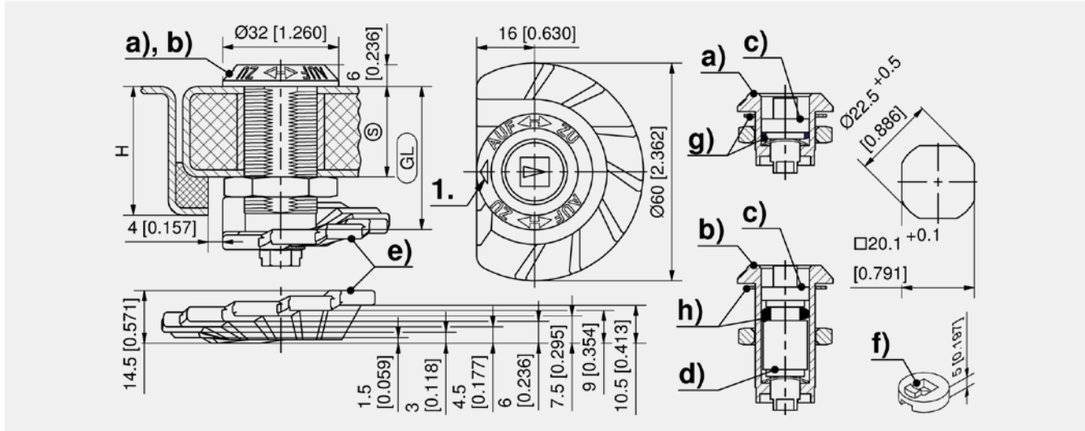

Quarter-Turn housing

	Part Number	Housing length	Door-thickness (S)	variable H-dimension	suitable Adapter set	Installation type	Delivery Unit
a)	200-9038.00-00000	18 mm	max. 8 mm	8 - 18 mm		screw-on	10 pcs.
b)	200-9039.00-00000	30 mm	max. 20 mm	20 - 30 mm	L20	screw-on	10 pcs.
b)	200-9040.00-00000	36 mm	max. 26 mm	26 - 36 mm	L26	screw-on	10 pcs.
b)	200-9041.00-00000	40 mm	max. 30 mm	30 - 40 mm	L30	screw-on	10 pcs.
b)	200-9042.00-00000	50 mm	max. 40 mm	40 - 50 mm	L40	screw-on	10 pcs.
b)	200-9047.00-00000	60 mm	max. 50 mm	50 - 60 mm	L50	screw-on	10 pcs.

Stepped cam

	Part Number	Stop	Delivery Unit
e)	200-2903.00-00000	No	10 pcs.
e)	200-2904.00-00000	Yes	10 pcs.

	Accessories
c)	150 1-101 **Inserts Pr20.1**
d)	200-9031.00-00000 **Adapter set L20**
d)	200-9032.00-00000 **Adapter set L26**
d)	200-9033.00-00000 **Adapter set L30**
d)	200-9034.00-00000 **Adapter set L40**
d)	200-9035.00-00000 **Adapter set L50**
f)	200-2803.30-00005 **Housing extension**
	768 6-100 **Wrench**
	766 6-101 **Universal key**

	Function extension
g)	209-9002.00-00000 **Sealing kit IP65 for Quarter-Turns Pr20.1**
h)	209-9006.00-00000 **Sealing kit IP65/IP67 for Quarter-Turns Pr20.1 L30-60**

all product details ▸ on DIRAK.com

1-200

Flush Latch with Integrated Hinge Function

[1-162]

DIN 61373

R L

120°

RoHS WEEE

Advantages

- For surface mounted doors.
- Hinge concealed.
- Door bending 23 mm.
- RH and LH version.
- 120° Opening angle.
- Flush latch through insert.
- Vibration-proof according to DIN EN 61373.
- When using 4 latches, the door can be lifted off completely.

Materials

- **Door- and frame-part:** zinc die, zinc plated
- **Lock Washer and counter-sunk screw:** steel, zinc plated
- **Lock Washer:** stainless steel

Remarks

The fastening of the door-part can be done by welding studs max. M6x8mm.

1. installation instruction for fastening washer
2. blind plug
3. door-notch 92 x 2mm
4. door
5. frame
6. (S) door-thickness max. 8mm

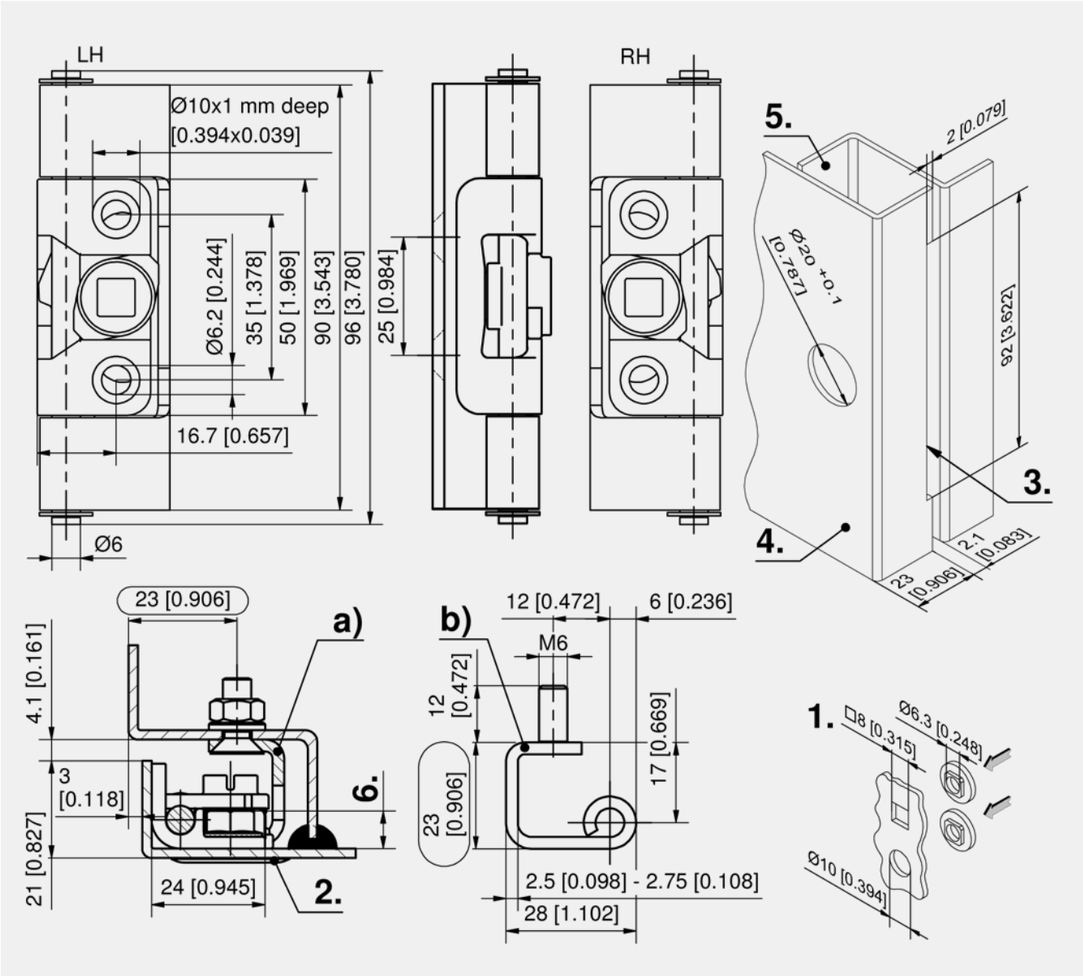

1-162

all product details on DIRAK.com

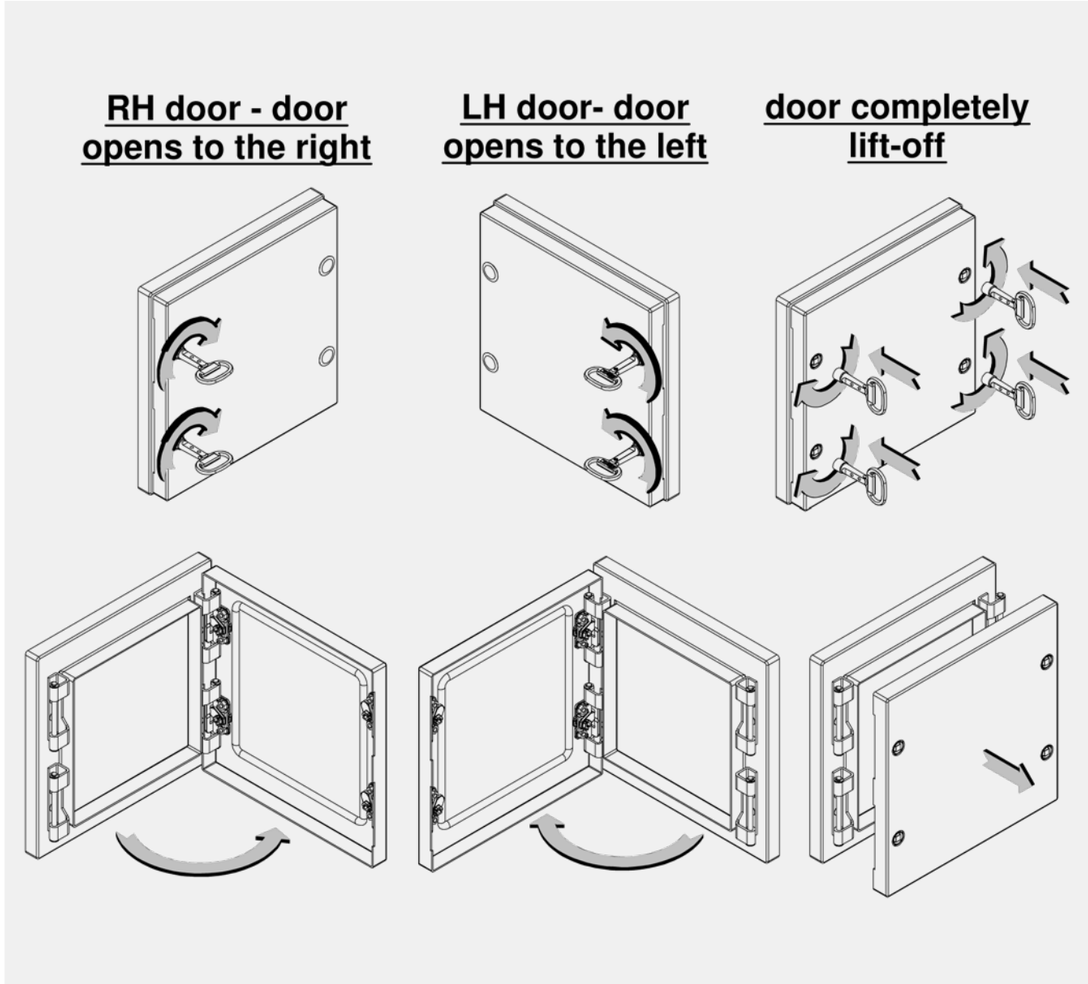

Flush latch

	Part Number	Version	Insert	Installation type frame-part	Installation type door-part	Delivery Unit
a)	243-9218.00-00000	LH version	Square 8mm	Countersunk screw	screw-on	10 pcs.
b)	243-9219.00-00000	LH version	Square 8mm	pressed in stud M6	screw-on	10 pcs.
a)	243-9220.00-00000	LH version	Double bit 3mm pin	Countersunk screw	screw-on	10 pcs.
b)	243-9221.00-00000	LH version	Double bit 3mm pin	pressed in stud M6	screw-on	10 pcs.
a)	243-9226.00-00000	LH version	Square 8mm with arrow	Countersunk screw	screw-on	10 pcs.
b)	243-9228.00-00000	LH version	Square 8mm with arrow	pressed in stud M6	screw-on	10 pcs.
a)	243-9222.00-00000	RH version	Square 8mm	Countersunk screw	screw-on	10 pcs.
b)	243-9223.00-00000	RH version	Square 8mm	pressed in stud M6	screw-on	10 pcs.
a)	243-9224.00-00000	RH version	Double bit 3mm pin	Countersunk screw	screw-on	10 pcs.
b)	243-9225.00-00000	RH version	Double bit 3mm pin	pressed in stud M6	screw-on	10 pcs.
a)	243-9227.00-00000	RH version	Square 8mm with arrow	Countersunk screw	screw-on	10 pcs.
b)	243-9229.00-00000	RH version	Square 8mm with arrow	pressed in stud M6	screw-on	10 pcs.

+	Accessories
	768 6-100 **Wrench**
	766 6-101 **Universal key**

+	Specific accessories
	243-0501.00-00000 **Fastening Washer**
	292-0604.00-07035 **Blind plug for prod.-system 1-162**
	800-1105.00-00000 **Weld stud M6x8**
	860-B193.00-00006 **Serrated nut M6**

Flush Quarter-Turn L22-66

[1-112]

DIN 61373

R L

15 Nm

RoHS WEEE

Advantages

- Flush-mounted quarter-turn for cutout Ø22mm.
- With the PA nut M22 x 1.5mm, the housing is put exactly into position and secured with the anti-rotation device. Precise detent for optimized alignment.
- In conjunction with the stop plate, stop less constructions with aluminum profiles and/or with flat components can be latched perfectly.
- Vibration-proof according to DIN EN 61373.
- RH / LH application.

Materials

- **Housing:** zinc die, chrome plated or black
- **Nut:** PA
- **Anti-rotation device:** zinc die, zinc plated

Remarks

(S) Door-thickness see table

Minimum door-thickness 5mm

d) adapter set

e) stop plate

Please configure the quarter-turn with insert, (adapter) and cam.

By using inserts the adapter is optional, by using knobs the adapter is necessary.

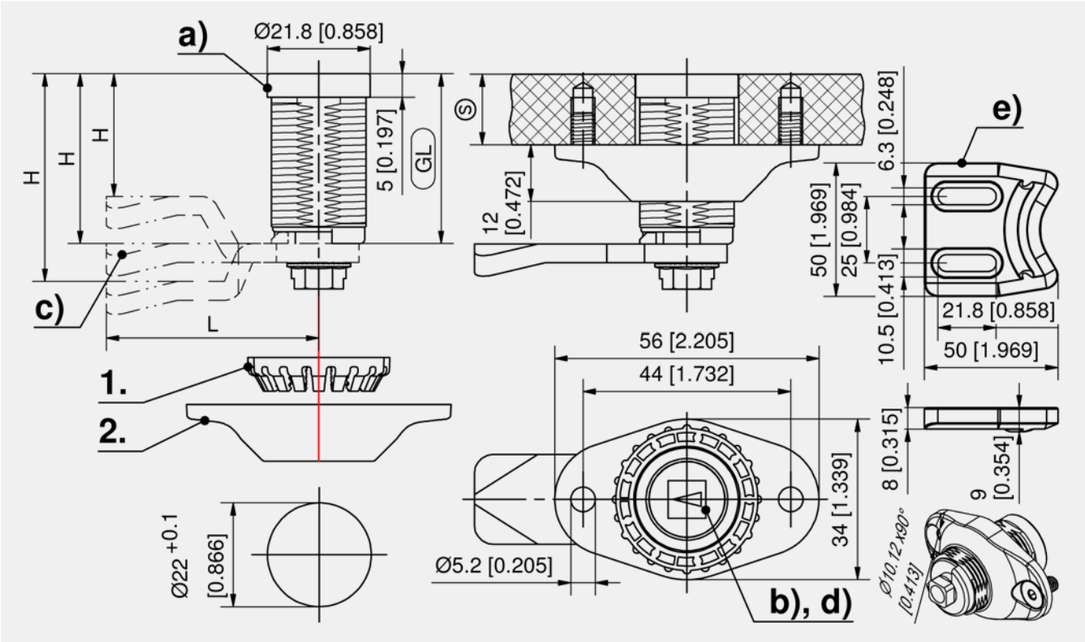

1-112

all product details on DIRAK.com

Quarter-Turn housing, zinc die

	Part Number	Surface	Housing length	Door-thickness (S)	suitable Adapter set	Installation type	Delivery Unit
a)	200-9089.00-00000	black	22 mm	max. 7 mm		screw-on	10 pcs.
a)	200-9088.00-00000	chrome plated	22 mm	max. 7 mm		screw-on	10 pcs.
a)	200-9090.00-00000	chrome plated	36 mm	max. 21 mm	L20	screw-on	10 pcs.
a)	200-9092.00-00000	chrome plated	42 mm	max. 27 mm	L26	screw-on	10 pcs.
a)	200-9094.00-00000	chrome plated	46 mm	max. 31 mm	L30	screw-on	10 pcs.
a)	200-9096.00-00000	chrome plated	56 mm	max. 41 mm	L40	screw-on	10 pcs.
a)	200-9098.00-00000	chrome plated	66 mm	max. 51 mm	L50	screw-on	10 pcs.

Accessories

b)	150 1-101	**Inserts Pr20.1**
c)	154, 292 1-102	**Cams L35/45 Steel**
d)	200-9031.00-00000	**Adapter set L20**
d)	200-9032.00-00000	**Adapter set L26**
d)	200-9033.00-00000	**Adapter set L30**
d)	200-9034.00-00000	**Adapter set L40**
d)	200-9035.00-00000	**Adapter set L50**
e)	265-3001.33-00000	**Stop plate**
	768 6-100	**Wrench**
	766 6-101	**Universal key**

Assembly options

200-0003.00-00000 **Assembling adapter without o-ring**

Flush-mounted Compression Latch L28/L37 Stainless Steel

[7-086]

IP 69K

15 Nm

RoHS WEEE

Advantages

- Flush-mounted version.
- Indication of opened/closed position on the housing edge and the insert.
- Vibration-proof.
- IP69K according to DIN 40050.
- RH and LH version.
- The H-dimension can be varied via the cranking of the cam.

Materials

- **Housing, insert, axis, nut and anti-rotation device**: AISI 316
- **Serrated screw:** stainless steel
- **O-ring:** NBR

Remarks

(S) Door-thickness min. 1.8mm

Negatively bent cams can not be installed pre-assembled.

1. compression 6mm
2. o-ring
3. nut
4. anti-rotation device (included in scope of delivery)
5. washer when using cylinder head screws or weld studs/nuts

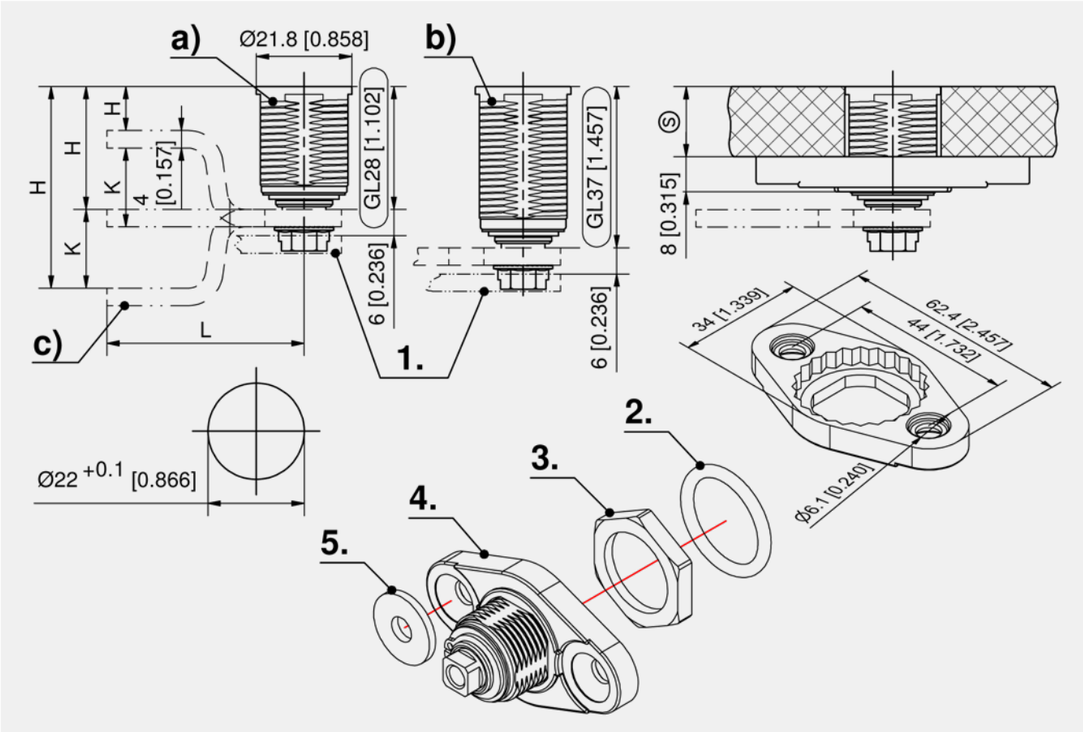

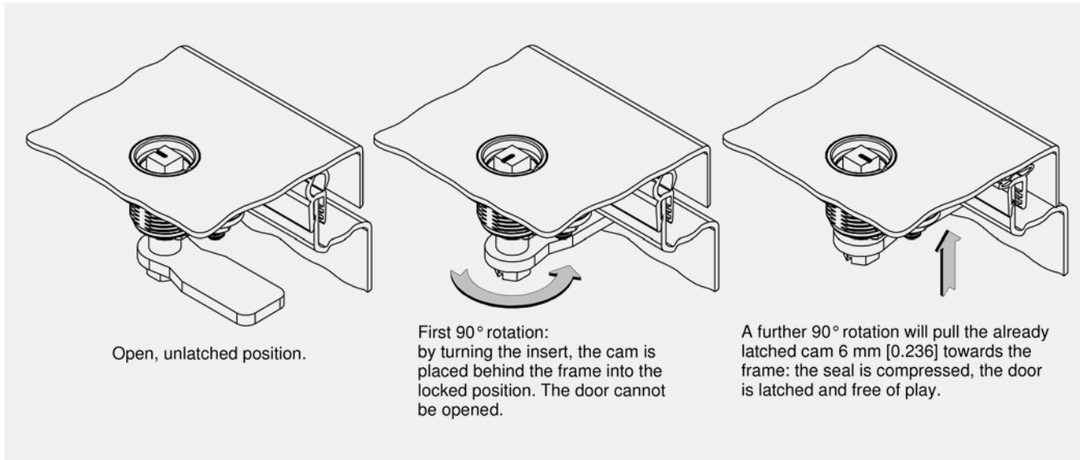

Flush-mounted compression latch with insert, RH version, closing left

	Part Number	Insert	Housing length	Door-thickness (S)	Installation type	Delivery Unit
a)	148-9102.00-00000	Square 8mm	28 mm	max. 13 mm	screw-on	1 pc.
a)	148-9103.00-00000	Double bit 3mm pin	28 mm	max. 13 mm	screw-on	1 pc.
a)	148-9107.00-00000	Triangular 8mm	28 mm	max. 13 mm	screw-on	1 pc.
a)	148-9108.00-00000	Conical square 9mm	28 mm	max. 13 mm	screw-on	1 pc.
b)	148-9302.00-00000	Square 8mm	37 mm	max. 22 mm	screw-on	1 pc.
b)	148-9303.00-00000	Double bit 3mm pin	37 mm	max. 22 mm	screw-on	1 pc.
b)	148-9307.00-00000	Triangular 8mm	37 mm	max. 22 mm	screw-on	1 pc.
b)	148-9308.00-00000	Conical square 9mm	37 mm	max. 22 mm	screw-on	1 pc.

Flush-mounted compression latch with insert, LH version, closing right

	Part Number	Insert	Housing length	Door-thickness (S)	Installation type	Delivery Unit
a)	148-9152.00-00000	Square 8mm	28 mm	max. 13 mm	screw-on	1 pc.
a)	148-9153.00-00000	Double bit 3mm pin	28 mm	max. 13 mm	screw-on	1 pc.
a)	148-9157.00-00000	Triangular 8mm	28 mm	max. 13 mm	screw-on	1 pc.
a)	148-9158.00-00000	Conical square 9mm	28 mm	max. 13 mm	screw-on	1 pc.
b)	148-9352.00-00000	Square 8mm	37 mm	max. 22 mm	screw-on	1 pc.
b)	148-9353.00-00000	Double bit 3mm pin	37 mm	max. 22 mm	screw-on	1 pc.
b)	148-9357.00-00000	Triangular 8mm	37 mm	max. 22 mm	screw-on	1 pc.
b)	148-9358.00-00000	Conical square 9mm	37 mm	max. 22 mm	screw-on	1 pc.

	Accessories
c) 159	7-105.01 **Cams L35/45 Stainless Steel**
768	6-100 **Wrench**
766	6-101 **Universal key**
770	6-105 **Keys for the Railway Sector**

Specific accessories
840-9021.00-00064 **Washer for 7-086 and 7-087**

7-086

all product details on DIRAK.com

Flush-mounted Compression Latch L28/L37 with H-Dimension Adjustment Stainless Steel

[7-087]

IP 69K

15 Nm

RoHS WEEE

Advantages

- Flush-mounted version.
- Indication of opened/closed position on the housing edge and the insert.
- Vibration-proof.
- IP69K to DIN 40050.
- RH and LH version.
- The H-dimension can be varied via the cranking of the cam.
- The cam can be varied to ±14 mm (GL28) and ±9 mm (GL37) via provided H-dimension adjustment on the threaded square rod.

Materials

- **Housing, knurled wheel, insert, axis, nut and anti-rotation device:** AISI 316
- **Catch:** AISI 301
- **O-ring:** NBR

Remarks

(S) Door-thickness min. 1.8mm

Negatively bent cams cannot be installed pre-assembled.

1. compression 6mm
2. o-ring
3. nut
4. anti-rotation device (included in scope of delivery)
5. washer when using cylinder head screws or weld studs/nuts
6. H-dimension adjustment

Variant where the cam can be variably adjusted with nuts, see website 7-087.01.

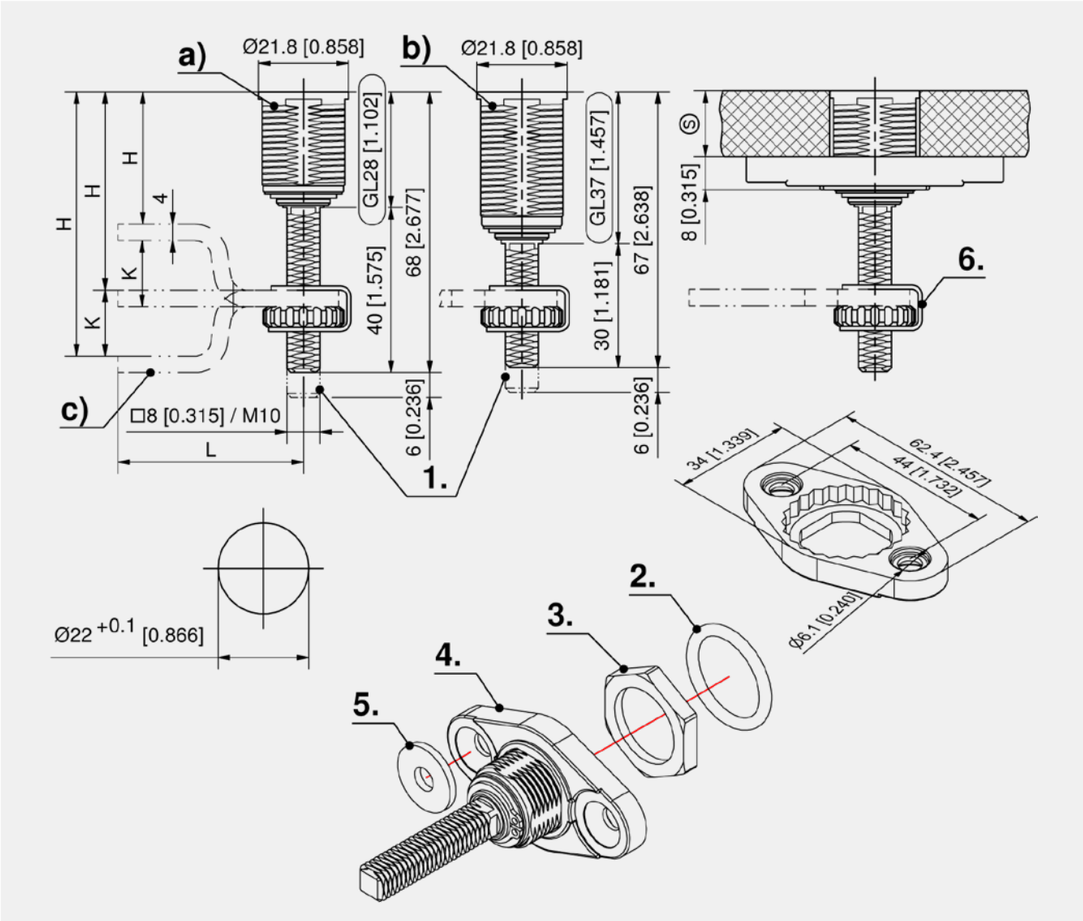

7-087

◂ all product details on DIRAK.com

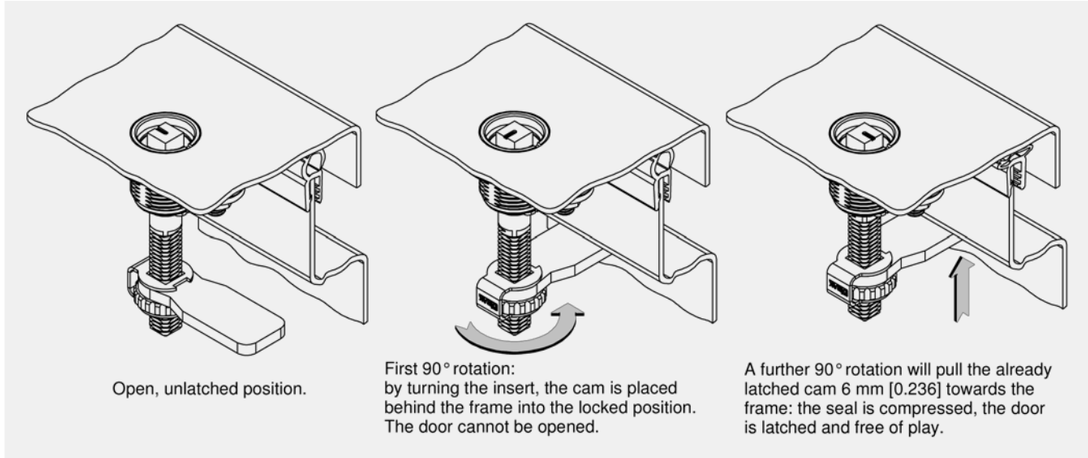

Flush-mounted compression latch with insert, RH version, closing left

	Part Number	Insert	Housing length	Door-thickness (S)	Installation type	Delivery Unit
a)	348-9202.00-00000	Square 8mm	28 mm	max. 13 mm	screw-on	1 pc.
a)	348-9203.00-00000	Double bit 3mm pin	28 mm	max. 13 mm	screw-on	1 pc.
a)	348-9207.00-00000	Triangular 8mm	28 mm	max. 13 mm	screw-on	1 pc.
a)	348-9208.00-00000	Conical square 9mm	28 mm	max. 13 mm	screw-on	1 pc.
b)	348-9402.00-00000	Square 8mm	37 mm	max. 22 mm	screw-on	1 pc.
b)	348-9403.00-00000	Double bit 3mm pin	37 mm	max. 22 mm	screw-on	1 pc.
b)	348-9407.00-00000	Triangular 8mm	37 mm	max. 22 mm	screw-on	1 pc.
b)	348-9408.00-00000	Conical square 9mm	37 mm	max. 22 mm	screw-on	1 pc.

Flush-mounted compression latch with insert, LH version, closing right

	Part Number	Insert	Housing length	Door-thickness (S)	Installation type	Delivery Unit
a)	348-9252.00-00000	Square 8mm	28 mm	max. 13 mm	screw-on	1 pc.
a)	348-9253.00-00000	Double bit 3mm pin	28 mm	max. 13 mm	screw-on	1 pc.
a)	348-9257.00-00000	Triangular 8mm	28 mm	max. 13 mm	screw-on	1 pc.
a)	348-9258.00-00000	Conical square 9mm	28 mm	max. 13 mm	screw-on	1 pc.
b)	348-9452.00-00000	Square 8mm	37 mm	max. 22 mm	screw-on	1 pc.
b)	348-9453.00-00000	Double bit 3mm pin	37 mm	max. 22 mm	screw-on	1 pc.
b)	348-9457.00-00000	Triangular 8mm	37 mm	max. 22 mm	screw-on	1 pc.
b)	348-9458.00-00000	Conical square 9mm	37 mm	max. 22 mm	screw-on	1 pc.

Accessories

c)	159	7-105.01 **Cams L35/45 Stainless Steel**
	768	6-100 **Wrench**
	766	6-101 **Universal key**
	770	6-105 **Keys for the Railway Sector**
	174	7-077 **Height Adjustable Cam L45 Stainless Steel**

Specific accessories

840-9021.00-00064 **Washer for 7-086 and 7-087**

Flush-mounted Quarter-Turn L20

[1-160]

RoHS WEEE

R L

Advantages

- Flush-mounted version.
- Quarter-turn screw-on, weld-on or rivet-on.
- RH and LH version.

Materials

- **Housing:** steel, zinc plated
- **Bezel:** zinc die, untreated

Remarks

Door-thickness min. 1.5mm

Please configure the quarter-turn with insert and cam.

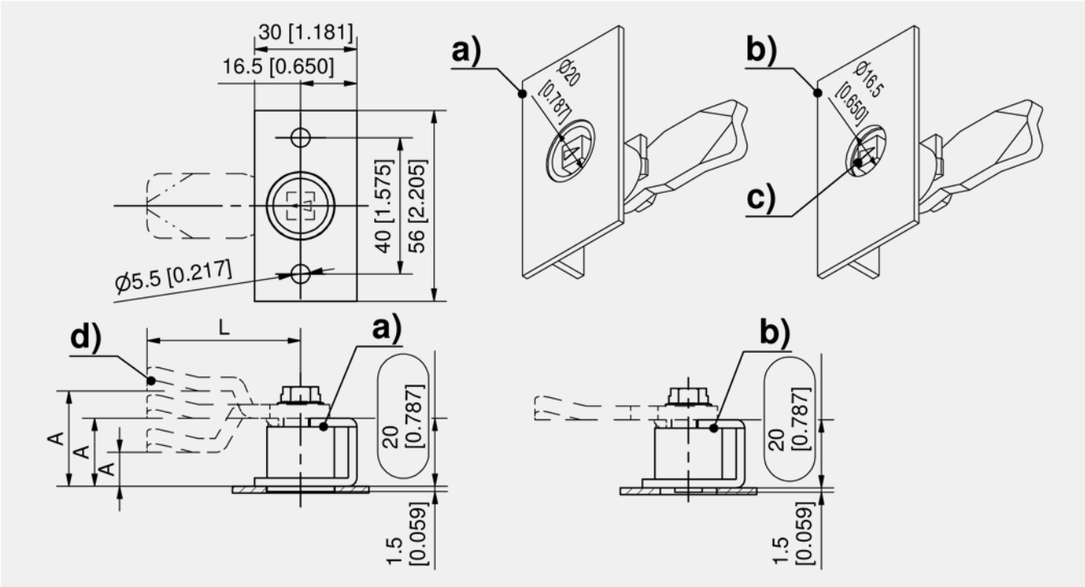

Quarter-Turn housing with bezel

	Part Number	Version	Housing length	Installation type	Delivery Unit
a)	200-9036.00-00000	RH version	20 mm	screw-/ weld-on/ rivet	10 pcs.
a)	200-9037.00-00000	LH version	20 mm	screw-/ weld-on/ rivet	10 pcs.

Quarter-Turn housing with bezel, flush

	Part Number	Version	Housing length	Installation type	Delivery Unit
b)	100-9010.00-00000	RH version	20 mm	screw-/ weld-on/ rivet	10 pcs.
b)	100-9011.00-00000	LH version	20 mm	screw-/ weld-on/ rivet	10 pcs.

Accessories

c) 150 1-101 **Inserts Pr20.1**
d) 154, 292 1-102 **Cams L35/45 Steel**
d) 161 1-262 **Cams variable**
768 6-100 **Wrench**
766 6-101 **Universal key**

Assembly options

200-0001.00-00000 **Assembling cam without o-ring**

all product details on DIRAK.com
1-160

Quarter-Turn with Drip Handle Pr20.1 L18

[1-135]

Advantages

- Versions **without cylinder** are water and dust tight according to IP65 DIN EN 60529.
- Versions **with cylinder** are water and dust tight according to IP54 DIN EN 60529.
- RH / LH application.
- Grounding by grounding nut.
- On request parts can be assembled.
- A pre-assembled quarter-turn can be installed in the cutout.

Materials

- **Drip handle:** PA, black with zinc die core
- **Housing:** zinc die, chrome plated
- **Cylinder:** PA, black or zinc die, chrome plated
- **Plug:** PA, black
- **Grounding nut:** zinc die

Remarks

(S) Door-thickness max. 8mm

Please configure the quarter-turn with a cam.

1. seal
2. plug

20

R L

IP 54

IP 65

15 Nm

RoHS WEEE

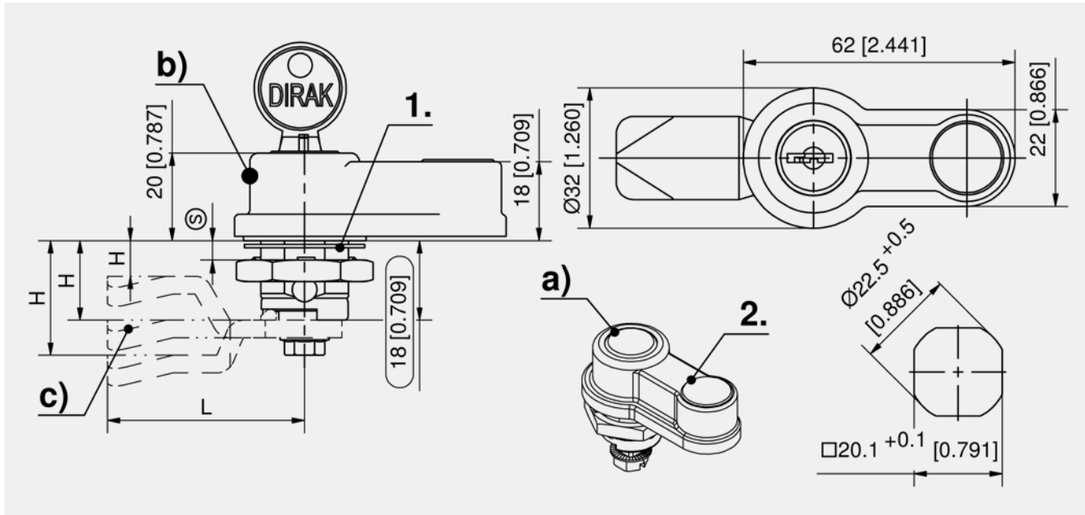

Quarter-Turn with drip handle

	Part Number	Version	Latching type	Material cylinder	Surface cylinder	IP protection	Installation type	Delivery Unit
a)	200-9394.00-00000	Blind plug				IP65	screw-on	1 pc.
b)	200-9392.00-00000	cylinder	keyed alike DIRAK 1333	PA	black	IP54	screw-on	1 pc.
b)	200-9393.00-00000	cylinder	keyed different	PA	black	IP54	screw-on	1 pc.
b)	200-9395.00-00000	cylinder	keyed alike DIRAK 1333	zinc die	chrome plated	IP54	screw-on	1 pc.
b)	200-9396.00-00000	cylinder	keyed different	zinc die	chrome plated	IP54	screw-on	1 pc.
b)	500-9395.00-00000	cylinder	keyed alike DS200	zinc die	chrome plated	IP54	screw-on	1 pc.

Accessories

c) 154, 292 1-102 **Cams L35/45 Steel**
c) 161 1-262 **Cams variable**

Assembly options

200-0020.00-00000 **Assembling cam, LH door**
200-0021.00-00000 **Assembling cam, RH door**

all product details on DIRAK.com
1-135

Quarter-Turn with Wing Knob Pr20.1 L18

[1-130]

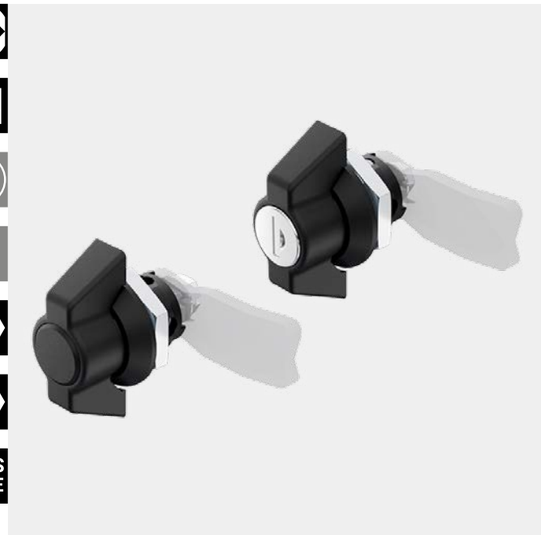

Advantages

- For cutout Pr20.1.
- With and without cylinder.
- RH / LH application.
- On request parts can be assembled.
- A pre-assembled quarter-turn-can be installed in the cutout.
- Version **without cylinder** IP65 according to DIN EN 60529.
- Grounding by grounding nut.

Materials

Version a) and b)

- **Housing:** zinc die, black
- **Cylinder:** zinc die with stainless steel dust-shutter
- **Wing knob:** PA, black with zinc die core
- **Plug:** PA, black
- **Grounding nut:** zinc die

Version a1) and b1)

- **Housing, cylinder, wing knob and plug:** PA, black
- **Nut:** zinc die or PA

Remarks

(S) Door-thickness max. 8mm

1. nut

2. grounding nut

Please configure the quarter-turn with a cam.

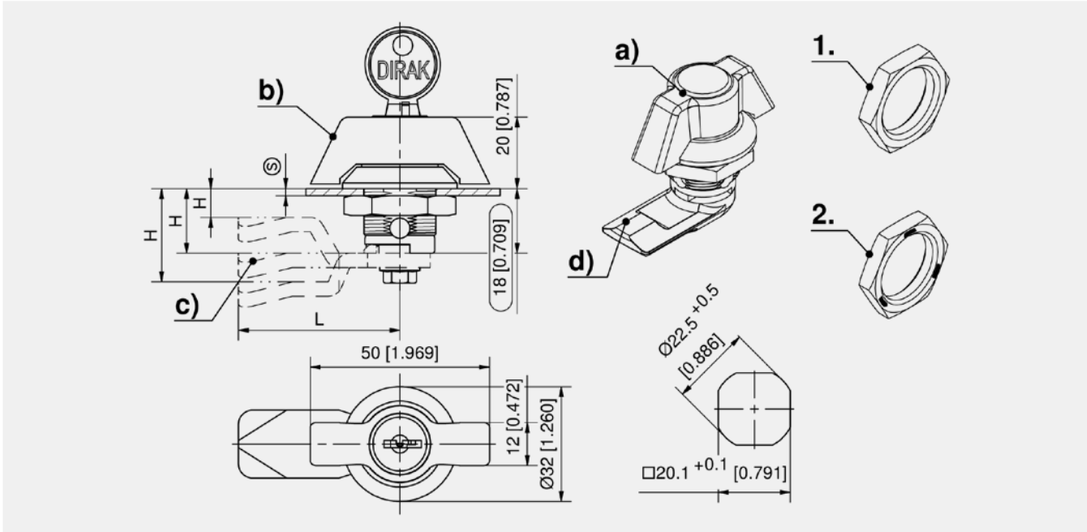

Quarter-Turn with wing knob

	Part Number	Latching type	Material	Surface nut	Grounding type	IP protection	Installation type	Delivery Unit
a)	200-9301.00-00000		PA / zinc die core	untreated	Grounding nut	IP65	screw-on	1 pc.
a1)	200-9368.00-00000		PA	zinc plated		IP65	screw-on	1 pc.
a1)	200-9371.00-00000		PA	black		IP65	screw-on	1 pc.
b)	200-9302.00-00000	keyed alike DIRAK 1333	PA / zinc die core	untreated	Grounding nut		screw-on	1 pc.
b1)	200-9369.00-00000	keyed alike DIRAK 1333	PA	zinc plated			screw-on	1 pc.
b1)	200-9372.00-00000	keyed alike DIRAK 1333	PA	black			screw-on	1 pc.
b)	500-9302.00-00000	keyed alike DS200	PA / zinc die core	untreated	Grounding nut		screw-on	1 pc.
b)	200-9303.00-00000	keyed different	PA / zinc die core	untreated	Grounding nut		screw-on	1 pc.
b1)	200-9370.00-00000	keyed different	PA	zinc plated			screw-on	1 pc.
b1)	200-9373.00-00000	keyed different	PA	black			screw-on	1 pc.

Accessories
c) 154, 292 1-102 **Cams L35/45 Steel**
c) 161 1-262 **Cams variable**
d) 71 200-5318.00-00000 **PA cam, L35mm / H18mm**
d) 71 200-5320.00-00000 **PA cam, L35mm / H20mm**
d) 71 200-5322.00-00000 **PA cam, L35mm / H22mm**
d) 71 200-5325.00-00000 **PA cam, L35mm / H25mm**
d) 71 200-5328.00-00000 **PA cam, L35mm / H28mm**

Assembly options
200-0001.00-00000 **Assembling cam without o-ring**
200-0019.00-00000 **Assembling cam 90° to handle without o-ring**

1-130

◂ all product details on DIRAK.com

Quarter-Turn with Wing Knob Pr20.1 L18

[7-085.01]

Advantages

- Version **without cylinder** IP69K according to DIN 40050.
- Version **with cylinder** IP65 according to DIN EN 60529.
- RH / LH application.
- Grounding by single sided grounding nut.
- A pre-assembled quarter-turn can be installed in the cutout.

Materials

- **Wing knob, housing:** AISI 316
- **Grounding nut:** AISI 316L
- **Sealings:** NBR Perbunan

Remarks

Door-thickness (S) max. 8mm

Pre-assembled **without** cam.

1. flat external seal

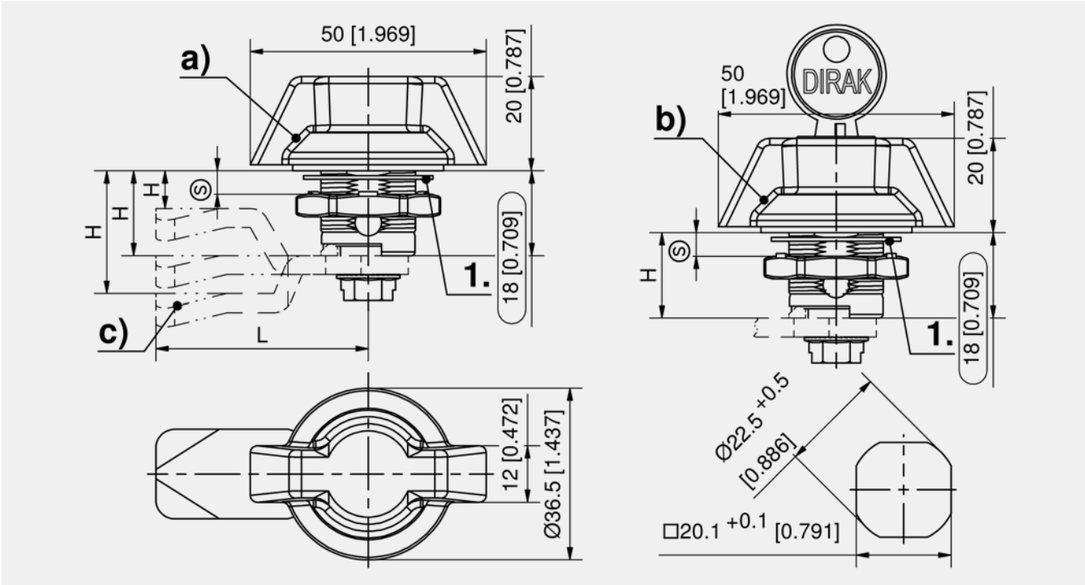

Quarter-Turn with wing knob

	Part Number	Latching type	IP protection	Installation type	Delivery Unit
a)	100-9315.00-00000		IP69K	screw-on	1 pc.
b)	100-9314.00-01333	keyed alike DIRAK 1333	IP65	screw-on	1 pc.
b)	100-9314.00-09999	keyed different	IP65	screw-on	1 pc.

Accessories
c) 156 7-105 **Cams L35/45 Stainless Steel**

Assembly options
200-0001.00-00000 **Assembling cam without o-ring**
200-0019.00-00000 **Assembling cam 90° to handle without o-ring**

all product details ▸ on DIRAK.com

7-085.01

Safety Quarter-Turn Pr20.1 L18 Stainless Steel

See page 43

Quarter-Turn with T-Handle Pr20.1 L18

[1-142]

Advantages

- Versions **without cylinder** are water and dust tight according to IP65 DIN EN 60529.
- Versions **with cylinder and insert** are water and dust tight according to IP54 DIN EN 60529.
- RH / LH application.
- Grounding by grounding nut.
- On request parts can be assembled by DIRAK.
- A pre-assembled quarter-turn can be installed in the cutout.
- All lockable handles supplied with two keys.

Materials

- **T-handle:** zinc die, nickel plated
- **Grounding nut:** zinc die

Other surfaces i.e. chrome plated, black on request

Remarks

(S) Door-thickness max. 8mm

Please configure the quarter-turn with a cam.

1. silicone seal

20 | R L | IP 54 | IP 65 | 15 Nm | RoHS WEEE

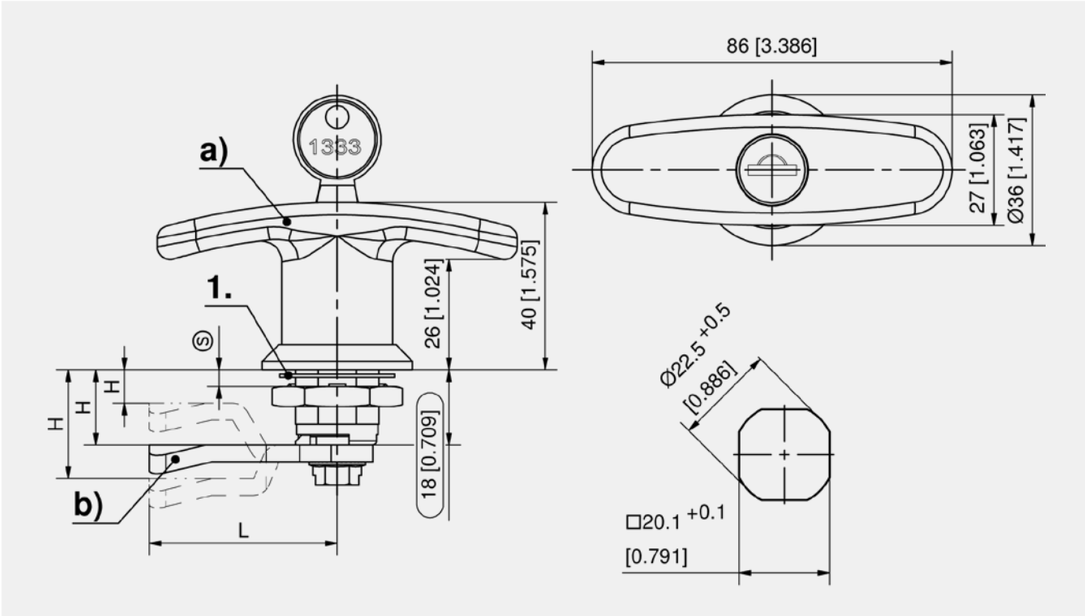

Quarter-Turn with T-handle

	Part Number	Housing length	Insert	IP protection	Installation type	Delivery Unit
a)	100-9306.00-00000	18 mm	without	IP65	screw-on	1 pc.
a)	100-9309.00-00001	18 mm	Square 8mm	IP65	screw-on	1 pc.

Quarter-Turn with T-handle and cylinder

	Part Number	Housing length	Latching type	IP protection	Installation type	Delivery Unit
a)	100-9308.00-00000	18 mm	keyed alike DIRAK 1333	IP54	screw-on	1 pc.
a)	100-9307.00-00000	18 mm	keyed different	IP54	screw-on	1 pc.

Accessories
b) 154, 292 1-102 **Cams L35/45 Steel**
b) 161 1-262 **Cams variable**
b) 294 2-150 **3-Point Cam L45, Rod Control**

Assembly options
200-0001.00-00000 **Assembling cam without o-ring**
200-0019.00-00000 **Assembling cam 90° to handle without o-ring**

all product details ▸
on DIRAK.com

1-142

Quarter-Turn with T-Handle Pr20.1 L18

[1-140]

20

R L

IP 54

IP 65

PA 4Nm

15 Nm

RoHS WEEE

Advantages

- Versions **without cylinder** are water- and dust-tight according to **IP65** DIN EN 60529.
- Versions **with cylinder** are water- and dust-tight according to **IP54** DIN EN 60529.
- RH / LH application.
- Grounding by grounding nut.
- On request parts can be assembled by DIRAK.
- A pre-assembled quarter-turn can be installed in the cutout.
- All lockable T-handles supplied with two keys.

Materials

- **T-handle:** PA, black with zinc die core or zinc die, chrome plated or black
- **Grounding nut:** zinc die

Remarks

(S) Door-thickness max. 8mm

Please configure the quarter-turn with a cam.

1. silicone seal

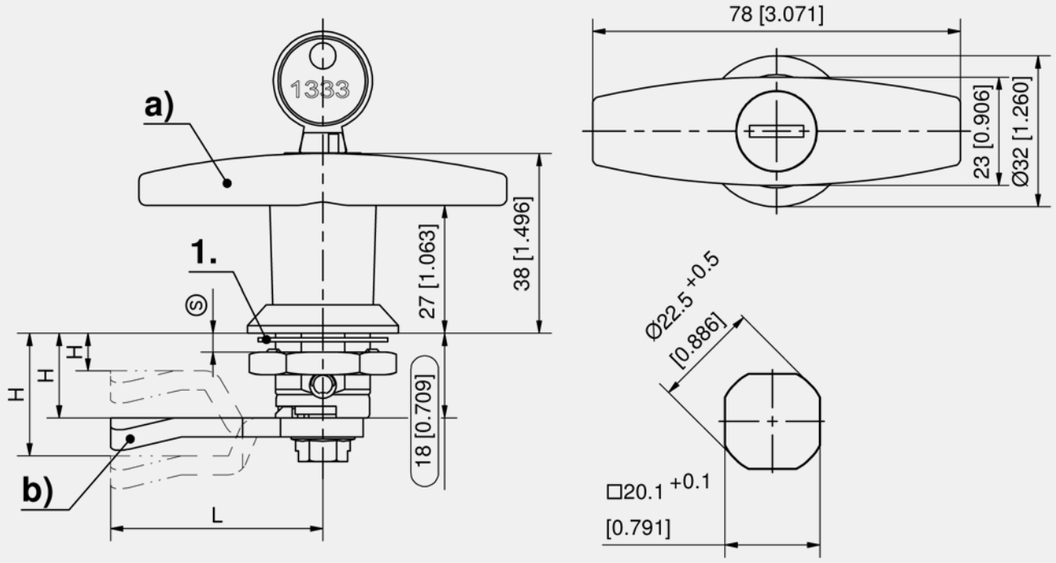

Quarter-Turn with T-handle

	Part Number	Latching type	Material	Surface	IP protection	Installation type	Delivery Unit
a)	200-9307.00-00000		PA / zinc die core	black	IP65	screw-on	1 pc.
a)	200-9308.00-00000	keyed alike DIRAK 1333	PA / zinc die core	black	IP54	screw-on	1 pc.
a)	200-9309.00-00000	keyed different	PA / zinc die core	black	IP54	screw-on	1 pc.
a)	500-9308.00-00000	keyed alike DS200	PA / zinc die core	black	IP54	screw-on	1 pc.
a)	200-9319.00-00000		zinc die	chrome plated	IP65	screw-on	1 pc.
a)	200-9320.00-00000	keyed alike DIRAK 1333	zinc die	chrome plated	IP54	screw-on	1 pc.
a)	200-9321.00-00000	keyed different	zinc die	chrome plated	IP54	screw-on	1 pc.
a)	200-9331.00-00000		zinc die	black	IP65	screw-on	1 pc.
a)	200-9332.00-00000	keyed alike DIRAK 1333	zinc die	black	IP54	screw-on	1 pc.
a)	200-9333.00-00000	keyed different	zinc die	black	IP54	screw-on	1 pc.
a)	500-9320.00-00000	keyed alike DS200	zinc die	chrome plated	IP54	screw-on	1 pc.
a)	500-9332.00-00000	keyed alike DS200	zinc die	black	IP54	screw-on	1 pc.
a)	501-9320.00-00000	PAGODA keyed alike	zinc die	chrome plated	IP54	screw-on	1 pc.
a)	501-9321.00-00000	PAGODA keyed different	zinc die	chrome plated	IP54	screw-on	1 pc.
a)	501-9332.00-00000	PAGODA keyed alike	zinc die	black	IP54	screw-on	1 pc.
a)	501-9333.00-00000	PAGODA keyed different	zinc die	black	IP54	screw-on	1 pc.

	Accessories
b)	154, 292 1-102 **Cams L35/45 Steel**
b)	161 1-262 **Cams variable**

	Assembly options
	200-0001.00-00000 **Assembling cam without o-ring**
	200-0019.00-00000 **Assembling cam 90° to handle without o-ring**

1-140

all product details on DIRAK.com

Quarter-Turn with T- Handle and Wing Knob [1-155.02]

20

R L

IP 54

IP 65

15 Nm

RoHS WEEE

Advantages

- Quarter-turn with extended housing.
- Maximum door-thickness 50mm.
- All versions of wing-handles are supplied complete with housing.
- Versions **without cylinder** IP65 according to DIN EN 60529.
- Versions **with cylinder** IP54 according to DIN EN 60529.
- All lockable handles supplied with 2 keys.
- Grounding by single sided grounding nut.

Materials

- **T-handle:** PA, black with zinc die core, or zinc die, chrome plated or black
- **Housing:** zinc die, black
- **Flat external seal:** NBR/Perbunan, black
- **Wing knob:** PA, black with zinc die core
- **Grounding nut:** zinc die

Remarks

(S) Door-thickness see table

Housings with L 36mm on request.

Detailed dimensions of the handles see product system 1-130, 1-140.

Part No. for PAGODA version with master key system on request.

Please configure the quarter-turn with a cam.

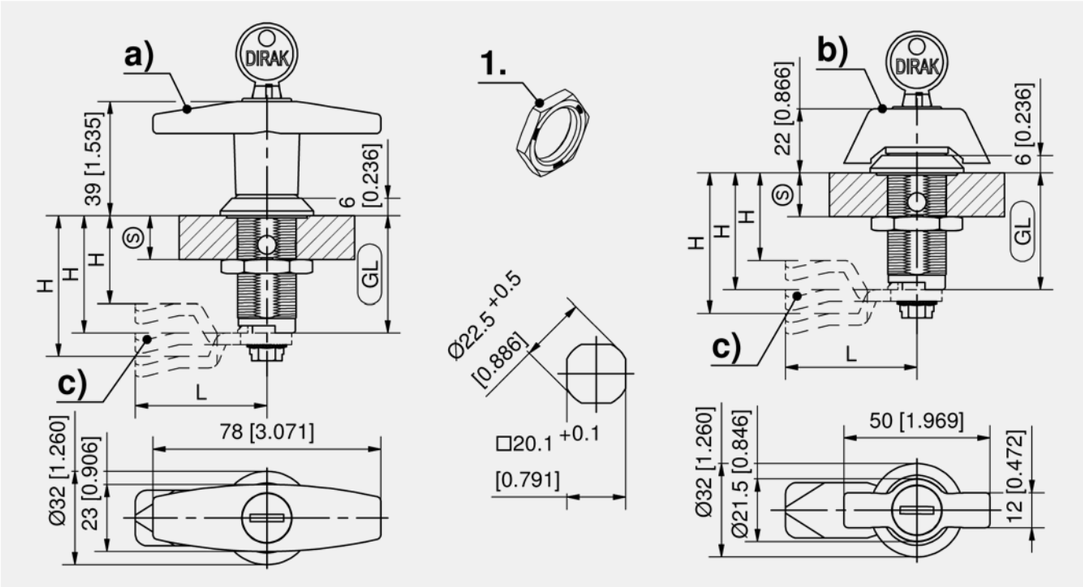

Quarter-Turn with T-handle, PA, black

	Part Number	Housing length	Latching type	Door-thickness (S)	IP protection	Installation type	Delivery Unit
a)	200-9310.00-00000	30 mm		max. 20 mm	IP65	screw-on	1 pc.
a)	200-9313.00-00000	30 mm	keyed alike DIRAK 1333	max. 20 mm	IP54	screw-on	1 pc.
a)	500-9313.00-00000	30 mm	keyed alike DS200	max. 20 mm	IP54	screw-on	1 pc.
a)	200-9316.00-00000	30 mm	keyed different	max. 20 mm	IP54	screw-on	1 pc.
a)	200-9311.00-00000	40 mm		max. 30 mm	IP65	screw-on	1 pc.
a)	200-9314.00-00000	40 mm	keyed alike DIRAK 1333	max. 30 mm	IP54	screw-on	1 pc.
a)	500-9314.00-00000	40 mm	keyed alike DS200	max. 30 mm	IP54	screw-on	1 pc.
a)	200-9317.00-00000	40 mm	keyed different	max. 30 mm	IP54	screw-on	1 pc.
a)	200-9312.00-00000	50 mm		max. 40 mm	IP65	screw-on	1 pc.
a)	200-9315.00-00000	50 mm	keyed alike DIRAK 1333	max. 40 mm	IP54	screw-on	1 pc.
a)	500-9315.00-00000	50 mm	keyed alike DS200	max. 40 mm	IP54	screw-on	1 pc.
a)	200-9318.00-00000	50 mm	keyed different	max. 40 mm	IP54	screw-on	1 pc.
a)	200-9346.00-00000	60 mm		max. 50 mm	IP65	screw-on	1 pc.
a)	200-9347.00-00000	60 mm	keyed alike DIRAK 1333	max. 50 mm	IP54	screw-on	1 pc.
a)	500-9347.00-00000	60 mm	keyed alike DS200	max. 50 mm	IP54	screw-on	1 pc.
a)	200-9348.00-00000	60 mm	keyed different	max. 50 mm	IP54	screw-on	1 pc.

1-155.02

all product details on DIRAK.com

Quarter-Turn with T-handle, zinc die, chrome plated

	Part Number	Housing length	Latching type	Door-thickness (S)	IP protection	Installation type	Delivery Unit
a)	200-9334.00-00000	30 mm		max. 20 mm	IP65	screw-on	1 pc.
a)	200-9337.00-00000	30 mm	keyed alike DIRAK 1333	max. 20 mm	IP54	screw-on	1 pc.
a)	500-9337.00-00000	30 mm	keyed alike DS200	max. 20 mm	IP54	screw-on	1 pc.
a)	200-9340.00-00000	30 mm	keyed different	max. 20 mm	IP54	screw-on	1 pc.
a)	501-9337.00-00000	30 mm	PAGODA keyed alike	max. 20 mm	IP54	screw-on	1 pc.
a)	200-9335.00-00000	40 mm		max. 30 mm	IP65	screw-on	1 pc.
a)	200-9338.00-00000	40 mm	keyed alike DIRAK 1333	max. 30 mm	IP54	screw-on	1 pc.
a)	500-9338.00-00000	40 mm	keyed alike DS200	max. 30 mm	IP54	screw-on	1 pc.
a)	200-9341.00-00000	40 mm	keyed different	max. 30 mm	IP54	screw-on	1 pc.
a)	501-9338.00-00000	40 mm	PAGODA keyed alike	max. 30 mm	IP54	screw-on	1 pc.
a)	200-9336.00-00000	50 mm		max. 40 mm	IP65	screw-on	1 pc.
a)	200-9339.00-00000	50 mm	keyed alike DIRAK 1333	max. 40 mm	IP54	screw-on	1 pc.
a)	500-9339.00-00000	50 mm	keyed alike DS200	max. 40 mm	IP54	screw-on	1 pc.
a)	200-9342.00-00000	50 mm	keyed different	max. 40 mm	IP54	screw-on	1 pc.
a)	200-9343.00-00000	60 mm		max. 50 mm	IP65	screw-on	1 pc.
a)	200-9344.00-00000	60 mm	keyed alike DIRAK 1333	max. 50 mm	IP54	screw-on	1 pc.
a)	500-9344.00-00000	60 mm	keyed alike DS200	max. 50 mm	IP54	screw-on	1 pc.
a)	200-9345.00-00000	60 mm	keyed different	max. 50 mm	IP54	screw-on	1 pc.

Quarter-Turn with T-handle, zinc die, black

	Part Number	Housing length	Latching type	Door-thickness (S)	IP protection	Installation type	Delivery Unit
a)	200-9352.00-00000	30 mm		max. 20 mm	IP65	screw-on	1 pc.
a)	200-9356.00-00000	30 mm	keyed alike DIRAK 1333	max. 20 mm	IP54	screw-on	1 pc.
a)	500-9356.00-00000	30 mm	keyed alike DS200	max. 20 mm	IP54	screw-on	1 pc.
a)	200-9360.00-00000	30 mm	keyed different	max. 20 mm	IP54	screw-on	1 pc.
a)	501-9356.00-00000	30 mm	PAGODA keyed alike	max. 20 mm	IP54	screw-on	1 pc.
a)	501-9360.00-00000	30 mm	PAGODA keyed different	max. 20 mm	IP54	screw-on	1 pc.
a)	200-9353.00-00000	40 mm		max. 30 mm	IP65	screw-on	1 pc.
a)	200-9357.00-00000	40 mm	keyed alike DIRAK 1333	max. 30 mm	IP54	screw-on	1 pc.
a)	200-9361.00-00000	40 mm	keyed different	max. 30 mm	IP54	screw-on	1 pc.
a)	200-9354.00-00000	50 mm		max. 40 mm	IP65	screw-on	1 pc.
a)	200-9358.00-00000	50 mm	keyed alike DIRAK 1333	max. 40 mm	IP54	screw-on	1 pc.
a)	200-9362.00-00000	50 mm	keyed different	max. 40 mm	IP54	screw-on	1 pc.
a)	200-9355.00-00000	60 mm		max. 50 mm	IP65	screw-on	1 pc.
a)	200-9359.00-00000	60 mm	keyed alike DIRAK 1333	max. 50 mm	IP54	screw-on	1 pc.
a)	200-9363.00-00000	60 mm	keyed different	max. 50 mm	IP54	screw-on	1 pc.

Quarter-Turn with wing knob, PA, black

	Part Number	Housing length	Latching type	Door-thickness (S)	IP protection	Installation type	Delivery Unit
b)	200-9322.00-00000	30 mm		max. 20 mm	IP65	screw-on	1 pc.
b)	200-9325.00-00000	30 mm	keyed alike DIRAK 1333	max. 20 mm	IP54	screw-on	1 pc.
b)	500-9325.00-00000	30 mm	keyed alike DS200	max. 20 mm	IP54	screw-on	1 pc.
b)	200-9328.00-00000	30 mm	keyed different	max. 20 mm	IP54	screw-on	1 pc.
b)	200-9323.00-00000	40 mm		max. 30 mm	IP65	screw-on	1 pc.
b)	200-9326.00-00000	40 mm	keyed alike DIRAK 1333	max. 30 mm	IP54	screw-on	1 pc.
b)	500-9326.00-00000	40 mm	keyed alike DS200	max. 30 mm	IP54	screw-on	1 pc.
b)	200-9329.00-00000	40 mm	keyed different	max. 30 mm	IP54	screw-on	1 pc.
b)	200-9324.00-00000	50 mm		max. 40 mm	IP65	screw-on	1 pc.
b)	200-9327.00-00000	50 mm	keyed alike DIRAK 1333	max. 40 mm	IP54	screw-on	1 pc.
b)	500-9327.00-00000	50 mm	keyed alike DS200	max. 40 mm	IP54	screw-on	1 pc.
b)	200-9330.00-00000	50 mm	keyed different	max. 40 mm	IP54	screw-on	1 pc.
b)	200-9349.00-00000	60 mm		max. 50 mm	IP65	screw-on	1 pc.
b)	200-9350.00-00000	60 mm	keyed alike DIRAK 1333	max. 50 mm	IP54	screw-on	1 pc.
b)	500-9350.00-00000	60 mm	keyed alike DS200	max. 50 mm	IP54	screw-on	1 pc.
b)	200-9351.00-00000	60 mm	keyed different	max. 50 mm	IP54	screw-on	1 pc.

+	Accessories
c)	154, 292 1-102 **Cams L35/45 Steel**
c)	161 1-262 **Cams variable**

Quarter-Turn with T-Handle Pr20.1 L18 Stainless Steel [7-090]

Advantages

- IP65 according to DIN EN 60529.
- RH / LH application.
- Grounding by grounding nut.
- On request parts can be assembled.
- A pre-assembled quarter-turn can be installed in the cutout.
- All lockable T-handles supplied with two keys.

Materials

- **T-handle:** completely AISI 316, surface polished
- **Nut:** stainless steel

Remarks

(S) Door-thickness max. 8mm

Please configure the quarter-turn with a cam.

1. flat external seal
2. single-sided groundig nut

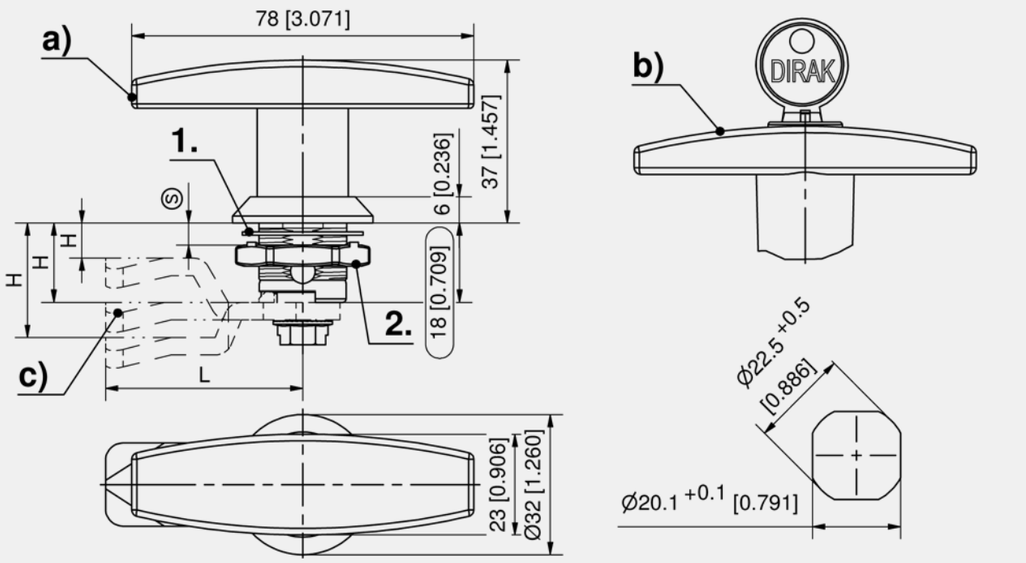

Quarter-Turn with T-handle

	Part Number	Latching type	Installation type	Delivery Unit
a)	200-9374.00-00000		screw-on	1 pc.
b)	200-9398.00-00000	keyed alike DIRAK 1333	screw-on	1 pc.
b)	200-9399.00-00000	keyed different	screw-on	1 pc.

Accessories
c) 154, 292 1-102 **Cams L35/45 Steel**
c) 161 1-262 **Cams variable**
c) 156 7-105 **Cams L35/45 Stainless Steel**

Assembly options
200-0001.00-00000 **Assembling cam without o-ring**
200-0019.00-00000 **Assembling cam 90° to handle without o-ring**

7-090

◂ all product details on DIRAK.com

Quarter-Turn with T-Handle Pr20.1 L30/50 [7-095.02]

Advantages

- Quarter-turn with T-handle with extended housing.
- IP65 according to DIN EN 60529.
- RH / LH application.
- Grounding by single sided grounding nut.
- Pre-assembled without cam.
- All lockable handles supplied with two keys.

Materials

- **Handle:** AISI 316, satin polished
- **Housing, grounding nut and adapter:** stainless steel
- **Flat external seal:** NBR, black

Remarks

Please configure the quarter-turn with a cam.

Price and delivery time on request.

Maximum door-thickness 20mm / 40mm.

Further housing lengths on request.

1. flat external seal

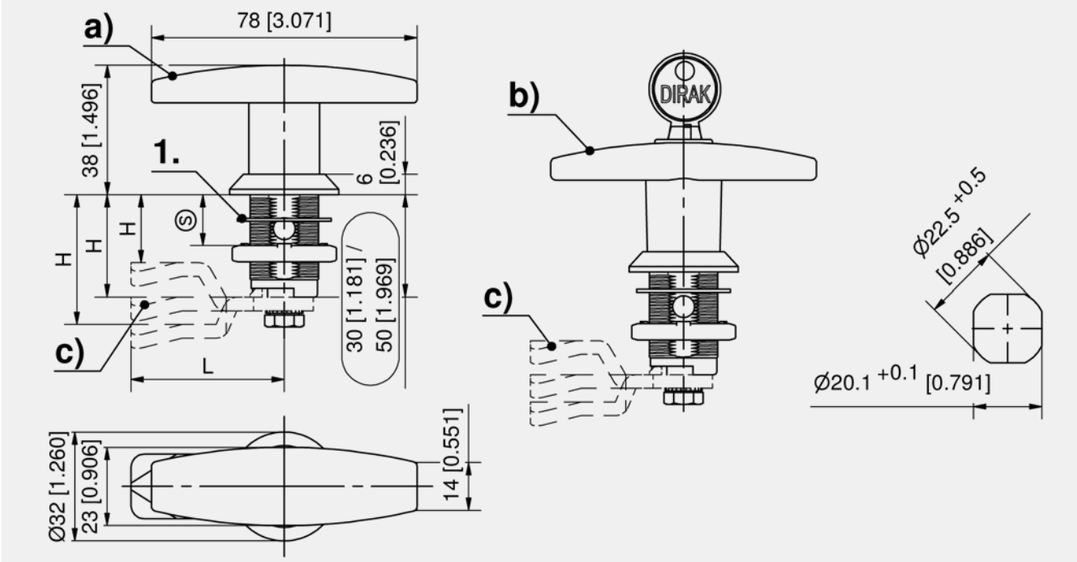

Quarter-Turn with T-handle

	Part Number	Housing length	Latching type	Door-thickness (S)	Installation type	Delivery Unit
a)	100-9401.00-00000	30 mm		max. 20 mm	screw-on	1 pc.
b)	100-9402.00-00000	30 mm	keyed alike DIRAK 1333	max. 20 mm	screw-on	1 pc.
b)	100-9403.00-00000	30 mm	keyed different	max. 20 mm	screw-on	1 pc.
a)	100-9404.00-00000	50 mm		max. 40 mm	screw-on	1 pc.
b)	100-9405.00-00000	50 mm	keyed alike DIRAK 1333	max. 40 mm	screw-on	1 pc.
b)	100-9406.00-00000	50 mm	keyed different	max. 40 mm	screw-on	1 pc.

Accessories
c) 154, 292 1-102 **Cams L35/45 Steel**
c) 161 1-262 **Cams variable**
c) 156 7-105 **Cams L35/45 Stainless Steel**

Assembly options
200-0001.00-00000 **Assembling cam without o-ring**
200-0019.00-00000 **Assembling cam 90° to handle without o-ring**

all product details ▸ on DIRAK.com

7-095.02

DIRAK

Quarter-Turn with L-Handle Pr20.1 L18

[1-150]

20

R L

IP 54

IP 65

15 Nm

RoHS WEEE

Advantages

- Versions **without cylinder** are water and dust tight according to IP65 DIN EN 60529.
- Versions **with cylinder** are water and dust tight according to IP54 DIN EN 60529.
- RH / LH application.
- Grounding by grounding nut.
- On request parts can be assembled by DIRAK.
- A pre-assembled quarter-turn can be installed in the cutout.
- All lockable L-handles supplied with two keys.

Materials

- **L-handle:** PA, black with zinc die core or zinc die, chrome plated or black
- **Housing:** zinc die, chrome plated or black
- **Grounding nut:** zinc die, untreated

Remarks

(S) Door-thickness max. 8mm

Please configure the quarter-turn with a cam.

Padlock feature only if cam is at 90° to the L-handle.

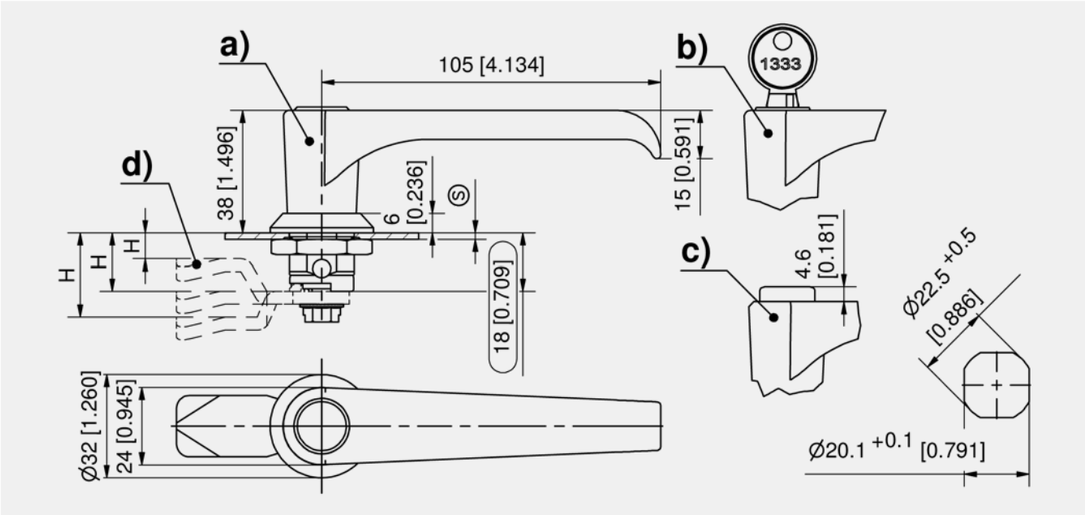

1-150

all product details on DIRAK.com

DIRAK

Quarter-Turn with L-handle

	Part Number	Latching type	Material	Surface	IP protection	Delivery Unit
a)	200-9401.00-00000		PA / zinc die core	black	IP65	1 pc.
b)	200-9402.00-00000	keyed alike DIRAK 1333	PA / zinc die core	black	IP54	1 pc.
b)	500-9402.00-00000	keyed alike DS200	PA / zinc die core	black	IP54	1 pc.
b)	200-9403.00-00000	keyed different	PA / zinc die core	black	IP54	1 pc.
c)	200-9483.00-00000	Push button	PA / zinc die core	black	IP65	1 pc.
a)	200-9419.00-00000		zinc die	chrome plated	IP65	1 pc.
b)	200-9420.00-00000	keyed alike DIRAK 1333	zinc die	chrome plated	IP54	1 pc.
a)	200-9427.00-00000		zinc die	black	IP65	1 pc.
b)	200-9428.00-00000	keyed alike DIRAK 1333	zinc die	black	IP54	1 pc.
b)	200-9437.00-00000	keyed different	zinc die	chrome plated	IP54	1 pc.
b)	200-9438.00-00000	keyed different	zinc die	black	IP54	1 pc.
b)	500-9420.00-00000	keyed alike DS200	zinc die	chrome plated	IP54	1 pc.
b)	500-9428.00-00000	keyed alike DS200	zinc die	black	IP54	1 pc.
b)	501-9420.00-00000	PAGODA keyed alike	zinc die	chrome plated	IP54	1 pc.
b)	501-9428.00-00000	PAGODA keyed alike	zinc die	black	IP54	1 pc.
b)	501-9437.00-00000	PAGODA keyed different	zinc die	chrome plated	IP54	1 pc.
b)	501-9438.00-00000	PAGODA keyed different	zinc die	black	IP54	1 pc.

	Accessories
d)	154, 292 1-102 **Cams L35/45 Steel**
d)	161 1-262 **Cams variable**

	Assembly options
	200-0001.00-00000 **Assembling cam without o-ring**
	200-0019.00-00000 **Assembling cam 90° to handle without o-ring**
	200-0020.00-00000 **Assembling cam, LH door**

Quarter-Turn with L-Handle Pr20.1 L30-60

[1-155.01]

20

R L

IP 54

IP 65

15 Nm

RoHS WEEE

Advantages

- With extended housing and single sided grounding nut.
- Maximum door-thickness 50mm.
- All versions of L-handles are supplied complete with housing.
- Versions **without cylinder** are water and dust tight according to IP65 DIN EN 60529.
- Versions **with cylinder** are water and dust tight according to IP54 DIN EN 60529.
- All lockable handles supplied with 2 keys

Materials

- **Handles:** PA, black with zinc die core or zinc die, chrome plated or black
- **Housing:** zinc die, chrome plated or black
- **Flat external seal:** NBR, black
- **Grounding nut:** zinc die

Remarks

(S) Door-thickness see table

Please configure the quarter-turn with a cam.

1. grounding nut

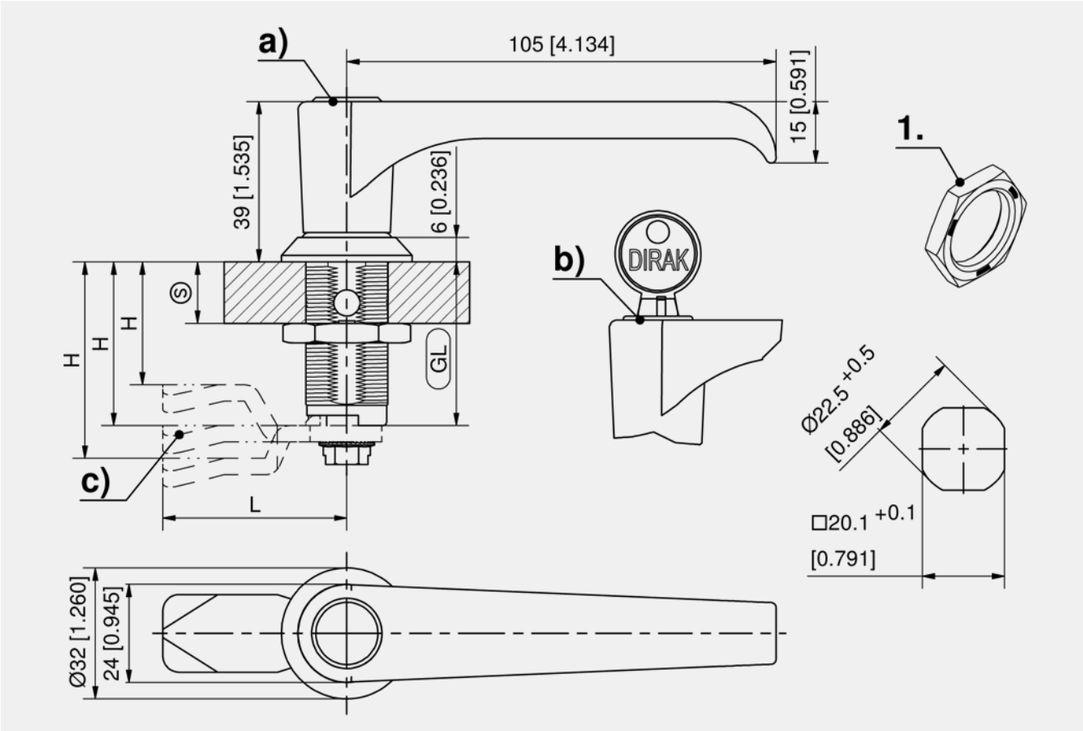

Quarter-Turn with L-handle, PA, black

	Part Number	Housing length	Latching type	Door-thickness (S)	IP protection	Installation type	Delivery Unit
a)	200-9404.00-00000	30 mm		max. 20 mm	IP65	screw-on	1 pc.
b)	200-9407.00-00000	30 mm	keyed alike DIRAK 1333	max. 20 mm	IP54	screw-on	1 pc.
b)	500-9407.00-00000	30 mm	keyed alike DS200	max. 20 mm	IP54	screw-on	1 pc.
b)	200-9410.00-00000	30 mm	keyed different	max. 20 mm	IP54	screw-on	1 pc.
a)	200-9405.00-00000	40 mm		max. 30 mm	IP65	screw-on	1 pc.
b)	200-9408.00-00000	40 mm	keyed alike DIRAK 1333	max. 30 mm	IP54	screw-on	1 pc.
b)	500-9408.00-00000	40 mm	keyed alike DS200	max. 30 mm	IP54	screw-on	1 pc.
b)	200-9411.00-00000	40 mm	keyed different	max. 30 mm	IP54	screw-on	1 pc.
a)	200-9406.00-00000	50 mm		max. 40 mm	IP65	screw-on	1 pc.
b)	200-9409.00-00000	50 mm	keyed alike DIRAK 1333	max. 40 mm	IP54	screw-on	1 pc.
b)	500-9409.00-00000	50 mm	keyed alike DS200	max. 40 mm	IP54	screw-on	1 pc.
b)	200-9412.00-00000	50 mm	keyed different	max. 40 mm	IP54	screw-on	1 pc.
a)	200-9414.00-00000	60 mm		max. 50 mm	IP65	screw-on	1 pc.
b)	200-9415.00-00000	60 mm	keyed alike DIRAK 1333	max. 50 mm	IP54	screw-on	1 pc.
b)	500-9415.00-00000	60 mm	keyed alike DS200	max. 50 mm	IP54	screw-on	1 pc.
b)	200-9416.00-00000	60 mm	keyed different	max. 50 mm	IP54	screw-on	1 pc.

Quarter-Turn with L-handle, zinc die, chrome plated

	Part Number	Housing length	Door-thickness (S)	Latching type	IP protection	Installation type	Delivery Unit
a)	200-9439.00-00000	30 mm	max. 20 mm		IP65	screw-on	1 pc.
b)	200-9443.00-00000	30 mm	max. 20 mm	keyed alike DIRAK 1333	IP54	screw-on	1 pc.
b)	200-9447.00-00000	30 mm	max. 20 mm	keyed different	IP54	screw-on	1 pc.
b)	501-9443.00-00000	30 mm	max. 20 mm	PAGODA keyed alike	IP54	screw-on	1 pc.
b)	501-9447.00-00000	30 mm	max. 20 mm	PAGODA keyed different	IP54	screw-on	1 pc.
a)	200-9440.00-00000	40 mm	max. 30 mm		IP65	screw-on	1 pc.
b)	200-9444.00-00000	40 mm	max. 30 mm	keyed alike DIRAK 1333	IP54	screw-on	1 pc.
b)	500-9444.00-00000	40 mm	max. 30 mm	keyed alike DS200	IP54	screw-on	1 pc.
b)	200-9448.00-00000	40 mm	max. 30 mm	keyed different	IP54	screw-on	1 pc.
b)	501-9444.00-00000	40 mm	max. 30 mm	PAGODA keyed alike	IP54	screw-on	1 pc.
b)	501-9448.00-00000	40 mm	max. 30 mm	PAGODA keyed different	IP54	screw-on	1 pc.
a)	200-9441.00-00000	50 mm	max. 40 mm		IP65	screw-on	1 pc.
b)	200-9445.00-00000	50 mm	max. 40 mm	keyed alike DIRAK 1333	IP54	screw-on	1 pc.
b)	200-9449.00-00000	50 mm	max. 40 mm	keyed different	IP54	screw-on	1 pc.
b)	501-9445.00-00000	50 mm	max. 40 mm	PAGODA keyed alike	IP54	screw-on	1 pc.
b)	501-9449.00-00000	50 mm	max. 40 mm	PAGODA keyed different	IP54	screw-on	1 pc.
a)	200-9442.00-00000	60 mm	max. 50 mm		IP65	screw-on	1 pc.
b)	200-9446.00-00000	60 mm	max. 50 mm	keyed alike DIRAK 1333	IP54	screw-on	1 pc.
b)	200-9450.00-00000	60 mm	max. 50 mm	keyed different	IP54	screw-on	1 pc.
b)	501-9446.00-00000	60 mm	max. 50 mm	PAGODA keyed alike	IP54	screw-on	1 pc.
b)	501-9450.00-00000	60 mm	max. 50 mm	PAGODA keyed different	IP54	screw-on	1 pc.

Quarter-Turn with L-handle, zinc die, black

	Part Number	Housing length	Door-thickness (S)	Latching type	IP protection	Installation type	Delivery Unit
a)	200-9451.00-00000	30 mm	max. 20 mm		IP65	screw-on	1 pc.
b)	200-9455.00-00000	30 mm	max. 20 mm	keyed alike DIRAK 1333	IP54	screw-on	1 pc.
b)	200-9459.00-00000	30 mm	max. 20 mm	keyed different	IP54	screw-on	1 pc.
b)	501-9455.00-00000	30 mm	max. 20 mm	PAGODA keyed alike	IP54	screw-on	1 pc.
b)	501-9459.00-00000	30 mm	max. 20 mm	PAGODA keyed different	IP54	screw-on	1 pc.
a)	200-9452.00-00000	40 mm	max. 30 mm		IP65	screw-on	1 pc.
b)	200-9456.00-00000	40 mm	max. 30 mm	keyed alike DIRAK 1333	IP54	screw-on	1 pc.
b)	500-9456.00-00000	40 mm	max. 30 mm	keyed alike DS200	IP54	screw-on	1 pc.
b)	200-9460.00-00000	40 mm	max. 30 mm	keyed different	IP54	screw-on	1 pc.
b)	501-9456.00-00000	40 mm	max. 30 mm	PAGODA keyed alike	IP54	screw-on	1 pc.
b)	501-9460.00-00000	40 mm	max. 30 mm	PAGODA keyed different	IP54	screw-on	1 pc.
a)	200-9453.00-00000	50 mm	max. 40 mm		IP65	screw-on	1 pc.
b)	200-9457.00-00000	50 mm	max. 40 mm	keyed alike DIRAK 1333	IP54	screw-on	1 pc.
b)	500-9457.00-00000	50 mm	max. 40 mm	keyed alike DS200	IP54	screw-on	1 pc.
b)	200-9461.00-00000	50 mm	max. 40 mm	keyed different	IP54	screw-on	1 pc.
b)	501-9457.00-00000	50 mm	max. 40 mm	PAGODA keyed alike	IP54	screw-on	1 pc.
b)	501-9461.00-00000	50 mm	max. 40 mm	PAGODA keyed different	IP54	screw-on	1 pc.
a)	200-9454.00-00000	60 mm	max. 50 mm		IP65	screw-on	1 pc.
b)	200-9458.00-00000	60 mm	max. 50 mm	keyed alike DIRAK 1333	IP54	screw-on	1 pc.
b)	500-9458.00-00000	60 mm	max. 50 mm	keyed alike DS200	IP54	screw-on	1 pc.
b)	200-9462.00-00000	60 mm	max. 50 mm	keyed different	IP54	screw-on	1 pc.
b)	501-9458.00-00000	60 mm	max. 50 mm	PAGODA keyed alike	IP54	screw-on	1 pc.
b)	501-9462.00-00000	60 mm	max. 50 mm	PAGODA keyed different	IP54	screw-on	1 pc.

+	Accessories
c)	154, 292 1-102 **Cams L35/45 Steel**
c)	161 1-262 **Cams variable**

1-155.01

all product details on DIRAK.com

Quarter-Turn with L-Handle Pr20.1 L18 Stainless Steel [7-103]

Advantages

- IP65 according to DIN EN 60529.
- RH / LH application.
- Grunding by grounding nut.
- On request parts can be assembled.
- A pre-assembled quarter-turn can be installed in the cutout.
- All lockable L-handles supplied with two keys.

Materials

- **L-handle:** AISI 316, surface polished
- **Nut, grounding nut:** stainless steel

Remarks

(S) Door-thickness max. 8mm

Please configure the quarter-turn with a cam.

Price and delivery time on request!

1. flat external seal

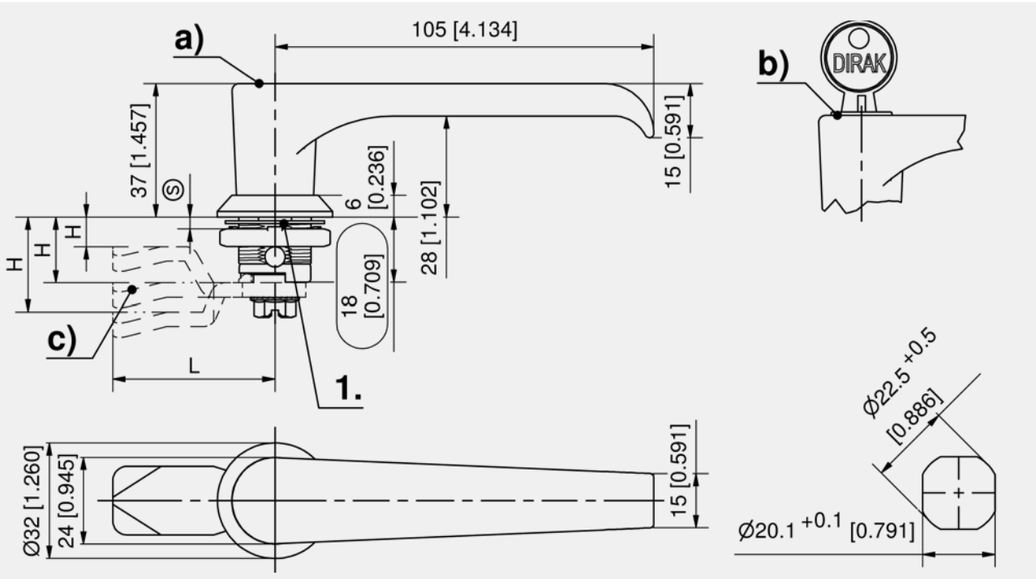

Quarter-Turn with L-handle

	Part Number	Latching type	Installation type	Delivery Unit
a)	200-9418.00-00000		screw-on	1 pc.
b)	200-9485.00-00000	keyed alike DIRAK 1333	screw-on	1 pc.
b)	200-9486.00-00000	keyed different	screw-on	1 pc.

	Accessories
c)	154, 292 1-102 **Cams L35/45 Steel**
c)	161 1-262 **Cams variable**
c)	156 7-105 **Cams L35/45 Stainless Steel**

	Assembly options
	200-0001.00-00000 **Assembling cam without o-ring**
	200-0019.00-00000 **Assembling cam 90° to handle without o-ring**
	200-0020.00-00000 **Assembling cam, LH door**

7-103

◂ all product details on DIRAK.com

Quarter-Turn with L-Handle Pr20.1 L30/50 [7-095.01]

Advantages

- Quarter-turn with L-handle with extended housing.
- IP65 according to DIN EN 60529.
- RH / LH application.
- Grounding by single sided grounding nut.
- Pre-assembled without cam.
- All lockable handles supplied with two keys.

Materials

- **Handle:** AISI 316, satin polished
- **Housing, grounding nut and adapter:** stainless steel
- **Flat external seal:** NBR, black

Remarks

Please configure the quarter-turn with a cam.

Price and delivery time on request.

Maximum door-thickness 20mm / 40mm.

Further housing lengths on request.

1. flat external seal

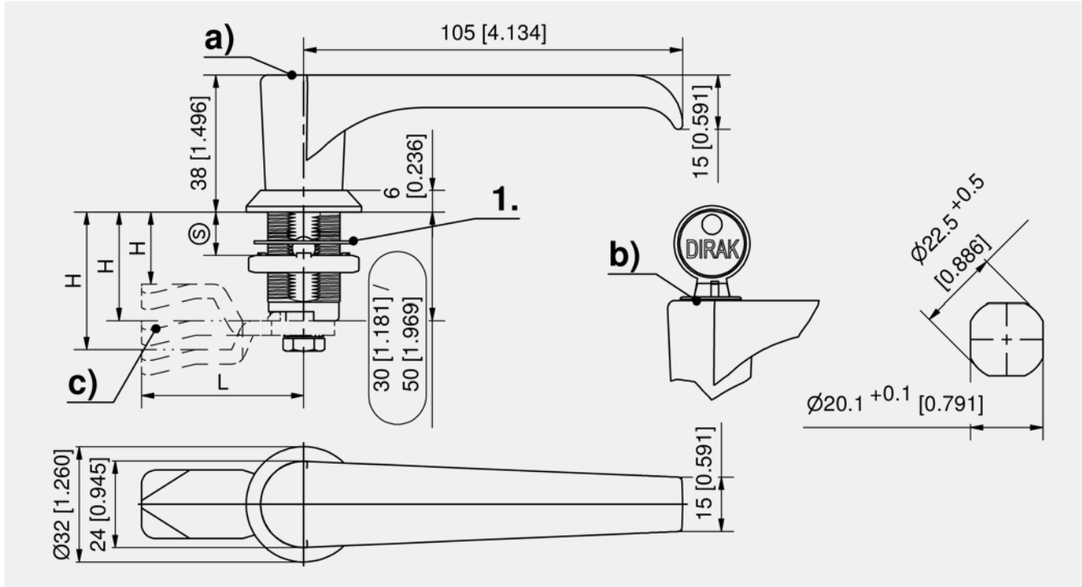

Quarter-Turn with L-handle

	Part Number	Housing length	Latching type	Door-thickness (S)	Installation type	Delivery Unit
a)	100-9407.00-00000	30 mm		max. 20 mm	screw-on	1 pc.
b)	100-9408.00-00000	30 mm	keyed alike DIRAK 1333	max. 20 mm	screw-on	1 pc.
b)	100-9409.00-00000	30 mm	keyed different	max. 20 mm	screw-on	1 pc.
a)	100-9410.00-00000	50 mm		max. 40 mm	screw-on	1 pc.
b)	100-9411.00-00000	50 mm	keyed alike DIRAK 1333	max. 40 mm	screw-on	1 pc.
b)	100-9412.00-00000	50 mm	keyed different	max. 40 mm	screw-on	1 pc.

	Accessories
c)	154, 292 1-102 **Cams L35/45 Steel**
c)	161 1-262 **Cams variable**
c)	156 7-105 **Cams L35/45 Stainless Steel**

	Assembly options
	200-0001.00-00000 **Assembling cam without o-ring**
	200-0019.00-00000 **Assembling cam 90° to handle without o-ring**
	200-0020.00-00000 **Assembling cam, LH door**

all product details ▸ on DIRAK.com

7-095.01

Quarter-Turn with L-Handle Pr20.1 L18

[1-151]

Advantages

- The radial spring loaded insert automatically locks the handle when the handle rotates back into the closed position.
- RH / LH application.
- Grounding by grounding nut.
- On request parts can be assembled by DIRAK.
- A pre-assembled quarter-turn can be installed in the cutout.

Materials

- **L-handle:** PA, black with zinc die core
- **Insert:** zinc die, chrome plated
- **Grounding nut:** zinc die

Remarks

(S) Door-thickness max. 8mm

Please configure the quarter-turn with a cam.

Padlock feature only if cam is at 90° to the L-handle.

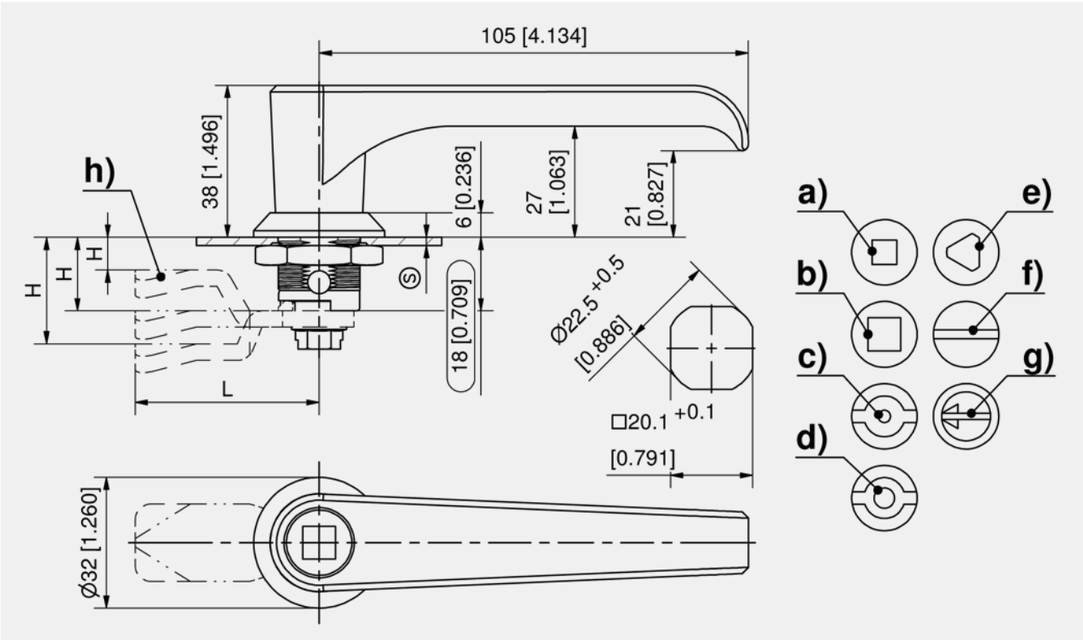

Quarter-Turn with L-handle

	Part Number	Insert	Installation type	Delivery Unit
a)	200-9429.00-00000	Square 6mm	screw-on	1 pc.
b)	200-9431.00-00000	Square 8mm	screw-on	1 pc.
c)	200-9432.00-00000	Double bit 3mm pin	screw-on	1 pc.
d)	200-9433.00-00000	Double bit 5mm pin	screw-on	1 pc.
e)	200-9435.00-00000	Triangular 8mm	screw-on	1 pc.
f)	200-9436.00-00000	Slotted 2x4mm	screw-on	1 pc.
g)	200-9475.00-00000	Slotted recessed coinproof	screw-on	1 pc.

Accessories
h) 154, 292 1-102 **Cams L35/45 Steel**
h) 161 1-262 **Cams variable**
768 6-100 **Wrench**
766 6-101 **Universal key**

Assembly options
200-0001.00-00000 **Assembling cam without o-ring**
200-0019.00-00000 **Assembling cam 90° to handle without o-ring**
200-0020.00-00000 **Assembling cam, LH door**

all product details on DIRAK.com
1-151

Quarter-Turn for Padlock Pr20.1 L22/32

[1-117]

Advantages

- For cutout Pr20.1.
- Lockable by a padlock.
- IP65 according to DIN EN 60529 by sealing kit (optional).
- RH / LH application.
- Grounding by grounding nut.
- On request parts can be assembled.
- The quarter-turn can be screwed into the cutout with the pre-assembled cam.

Materials

- **Housing:** zinc die, chrome plated or black
- **Grounding nut:** zinc die

Remarks

Please configure the quarter-turn with insert, (adapter) and cam.

Negatively bent cams can **not** be installed pre-assembled.

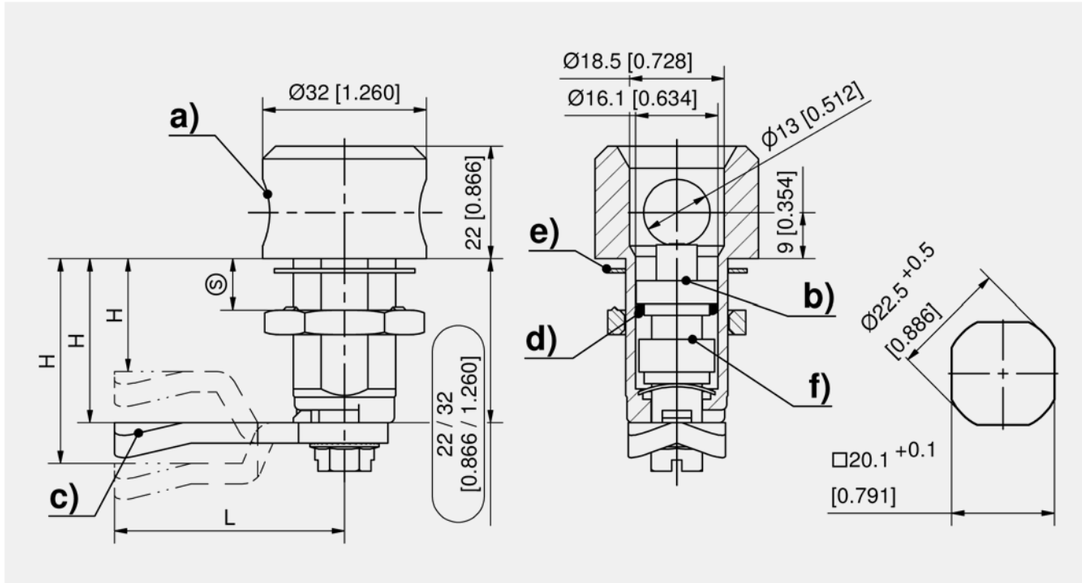

Quarter-Turn for padlock

	Part Number	Surface	Housing length	Door-thickness (S)	Installation type	Delivery Unit
a)	200-9082.00-00000	chrome plated	22 mm	max. 12 mm	screw-on	10 pcs.
a)	200-9083.00-00000	black	22 mm	max. 12 mm	screw-on	10 pcs.
a)	200-9084.00-00000	chrome plated	32 mm	max. 22 mm	screw-on	10 pcs.
a)	200-9085.00-00000	black	32 mm	max. 22 mm	screw-on	10 pcs.

Accessories
b) 150 1-101 **Inserts Pr20.1**
c) 154, 292 1-102 **Cams L35/45 Steel**
f) 200-9031.00-00000 **Adapter set L20**
768 6-100 **Wrench**
766 6-101 **Universal key**

Function extension
d) and e) 209-9002.00-00000 **Sealing kit IP65 for Quarter-Turns Pr20.1**

all product details on DIRAK.com
1-117

Quarter-Turn for Padlock Pr20.1 L 18/40 [1-132]

Advantages

- For cutout 20.1
- IP66 according to DIN EN 60529.
- RH / LH application
- Grounding by grounding nut.
- A pre-assembled quarter-turn can be installed in the cutout.

Materials

- **Wing knob:** zinc die, chrome plated or black
- **Housing:** zinc die, zinc plated
- **Grounding nut**: zinc die

Remarks

(S) Door-thickness see table

Please configure the quarter-turn with a cam.

Padlock feature only if cam is at 90° to the wing knob.

1. seal

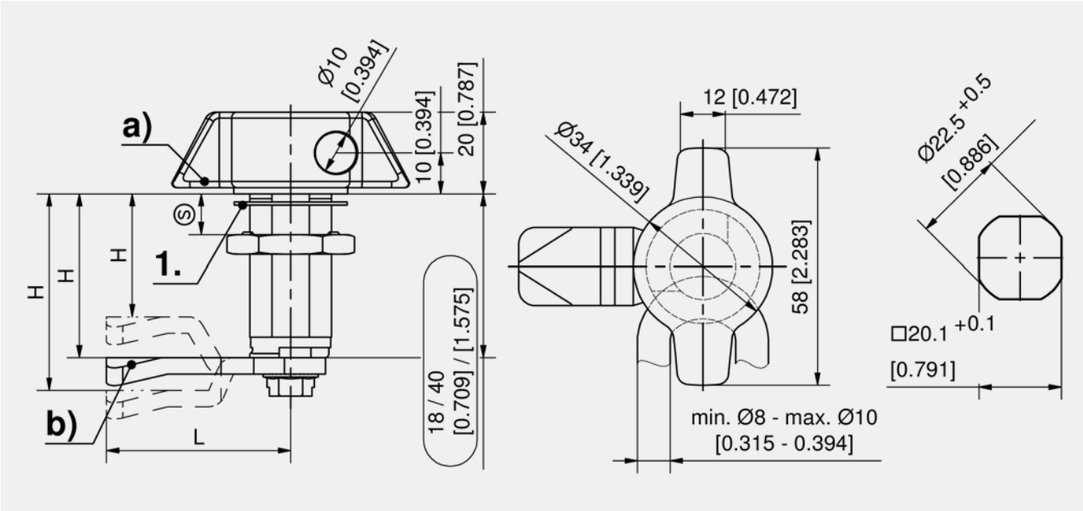

Quarter-Turn for padlock

	Part Number	Surface	Version	Housing length	Door-thickness (S)	Installation type	Delivery Unit
a)	200-9365.00-00000	black	E-coated	18 mm	max. 8 mm	screw-on	1 pc.
a)	100-9311.00-00000	black	E-coated	40 mm	max. 30 mm	screw-on	1 pc.
a)	200-9365.TX-00000	black	Textured powder, black	18 mm	max. 8 mm	screw-on	1 pc.
a)	100-9311.TX-00000	black	Textured powder, black	40 mm	max. 30 mm	screw-on	1 pc.
a)	200-9364.00-00000	chrome plated		18 mm	max. 8 mm	screw-on	1 pc.
a)	100-9310.00-00000	chrome plated		40 mm	max. 30 mm	screw-on	1 pc.

Accessories

b) 154, 292 1-102 **Cams L35/45 Steel**
b) 161 1-262 **Cams variable**

Assembly options

200-0020.00-00000 **Assembling cam, LH door**
200-0021.00-00000 **Assembling cam, RH door**

1-132 ◂ all product details on DIRAK.com

Quarter-Turn for Padlock Pr20.1 L18 Stainless Steel [7-085]

Advantages

- IP65/67 according to DIN EN 60529.
- RH / LH application.
- Grounding by grounding nut.
- A pre-assembled quarter-turn can be installed in the cutout.

Materials

- **Wing knob:** AISI 316, surface polished
- **Housing and nut:** stainless steel

Remarks

(S) Door-thickness max. 8mm

Please configure the quarter-turn with a cam.

Padlock feature only if cam is at 90° to the wing knob.

1. flat external seal

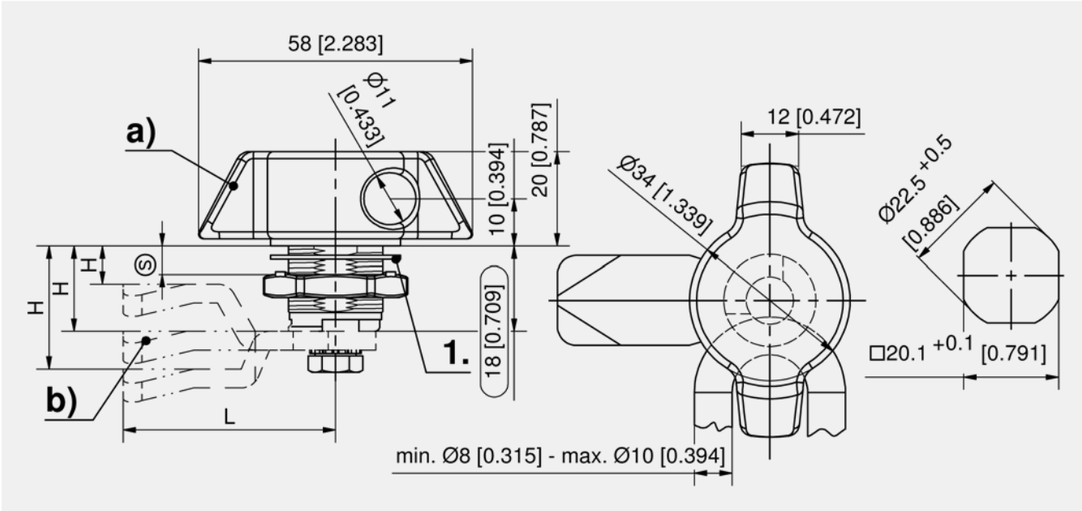

Quarter-Turn for padlock

	Part Number	Housing length	Installation type	Delivery Unit
a)	200-9375.00-00000	18 mm	screw-on	1 pc.

Accessories

b) 156 7-105 **Cams L35/45 Stainless Steel**
154, 292 1-102 **Cams L35/45 Steel**
161 1-262 **Cams variable**

Assembly options

200-0019.00-00000 **Assembling cam 90° to handle without o-ring**
200-0020.00-00000 **Assembling cam, LH door**

all product details on DIRAK.com ▸ 7-085

L-Handle for Padlock Pr20.1 L18/40

[1-154]

Advantages

- For cutout 20.1.
- IP65 according to DIN EN 60529.
- RH / LH application.
- Grounding by grounding nut.
- On request parts can be assembled by DIRAK.
- The L-handle can be screwed into the cutout with the pre-assembled cam.

Materials

- **L-handle:** zinc die, chrome plated or black
- **Housing:** zinc die, zinc plated
- **Grounding nut:** zinc die
- **O-ring:** NBR

Remarks

(S) Door-thickness see table

Please configure the L-handle with a cam.

Padlock feature only if cam is at 90° to the L-handle.

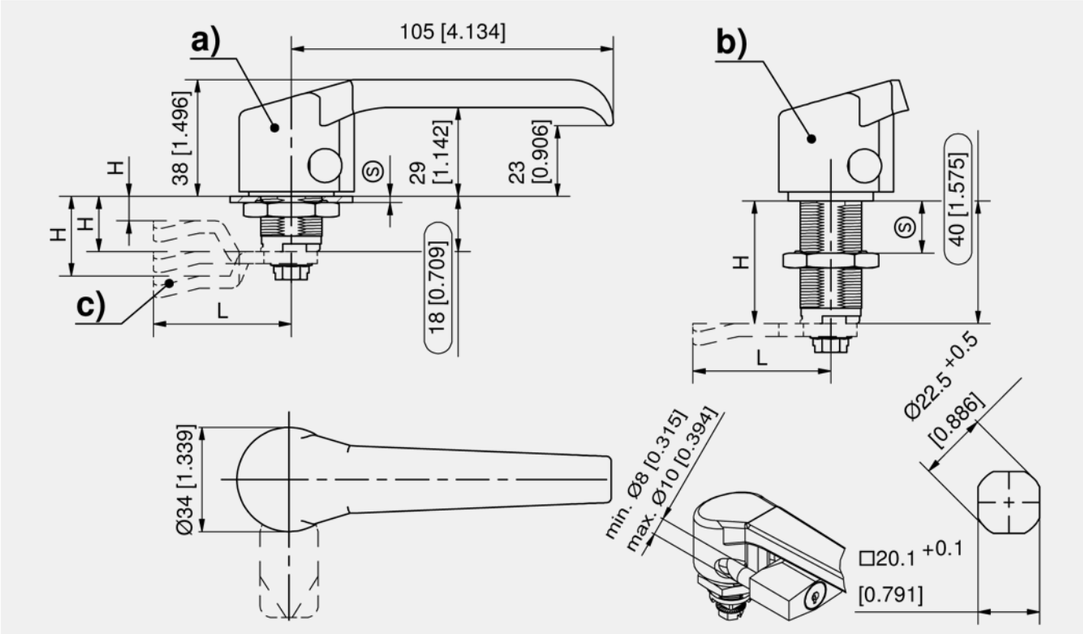

L-handle for padlock

	Part Number	Surface	Version	Housing length	Door-thickness (S)	Installation type	Delivery Unit
a)	200-9463.00-00000	chrome plated	glossy	18 mm	max. 8 mm	screw-on	1 pc.
a)	200-9464.00-00000	black	E-coated	18 mm	max. 8 mm	screw-on	1 pc.
a)	200-9464.TX-00000	black	Textured powder, black	18 mm	max. 8 mm	screw-on	1 pc.
b)	200-9491.00-00000	chrome plated	glossy	40 mm	max. 30 mm	screw-on	1 pc.
b)	200-9492.00-00000	black	E-coated	40 mm	max. 30 mm	screw-on	1 pc.
b)	200-9492.TX-00000	black	Textured powder, black	40 mm	max. 30 mm	screw-on	1 pc.

Accessories
c) 154, 292 1-102 **Cams L35/45 Steel**
c) 161 1-262 **Cams variable**

Assembly options
200-0020.00-00000 **Assembling cam, LH door**
200-0021.00-00000 **Assembling cam, RH door**

1-154

◂ all product details on DIRAK.com

L-Handle for Padlock Pr20.1 L18

[1-154.01]

Advantages

- With cylinder barrel or spring-loaded slotted insert.
- IP65 according to DIN EN 60529.
- RH / LH application.
- Grounding by grounding nut.
- On request parts can be assembled by DIRAK.
- The quarter-turn can be screwed into the cutout with the pre-assembled cam.
- All lockable handles supplied with two keys.

Materials

- **L-handle:** zinc die, black
- **Housing:** zinc die, zinc plated
- **Slotted insert:** zinc die, chrome plated
- **Cylinder barrel:** zinc die, with stainless dust cap
- **Grounding nut:** zinc die

Remarks

(S) Door-thickness max. 8mm

Please configure the quarter-turn with a cam.

Padlock feature only if cam is at 90° to the L-handle.

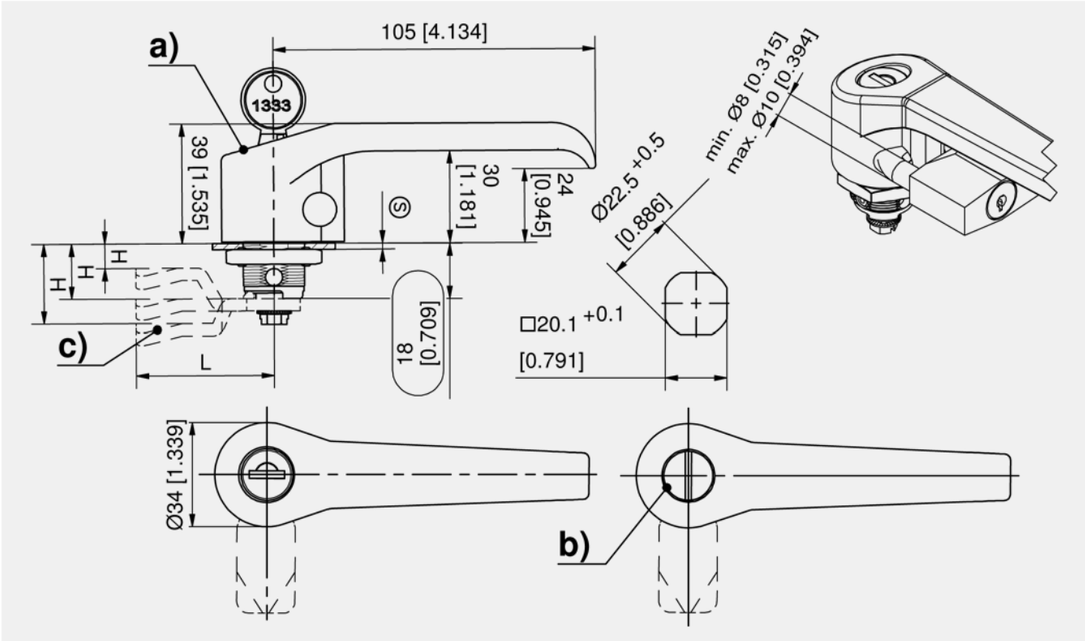

L-handle for padlock

	Part Number	Version	Insert	Latching type	Installation type	Delivery Unit
a)	200-9488.00-00000	E-coated		keyed alike DIRAK 1333	screw-on	1 pc.
a)	200-9488.TX-00000	Textured powder, black		keyed alike DIRAK 1333	screw-on	1 pc.
a)	200-9490.00-00000	E-coated		keyed different	screw-on	1 pc.
a)	200-9490.TX-00000	Textured powder, black		keyed different	screw-on	1 pc.
b)	200-9489.00-00000	E-coated	Slotted 2x4mm		screw-on	1 pc.
b)	200-9489.TX-00000	Textured powder, black	Slotted 2x4mm		screw-on	1 pc.

Accessories
c) 154, 292 1-102 **Cams L35/45 Steel**
c) 161 1-262 **Cams variable**

Assembly options
200-0020.00-00000 **Assembling cam, LH door**
200-0021.00-00000 **Assembling cam, RH door**

all product details ▸ on DIRAK.com

1-154.01

L-Handle for Padlock Pr20.1 L18 Stainless Steel [7-100]

Advantages

- IP65 according to DIN EN 60529.
- RH / LH application.
- Grounding by grounding nut.
- On request parts can be assembled by DIRAK.
- A pre-assembled quarter-turn can be installed in the cutout.

Materials

- **L-Handle:** AISI 316, surface polished
- **Grounding nut:** stainless steel
- **O-ring:** NBR

Remarks

(S) Door-thickness max. 8mm

Please configure the quarter-turn with a cam.

Padlock feature only if cam is at 90° to the L-handle.

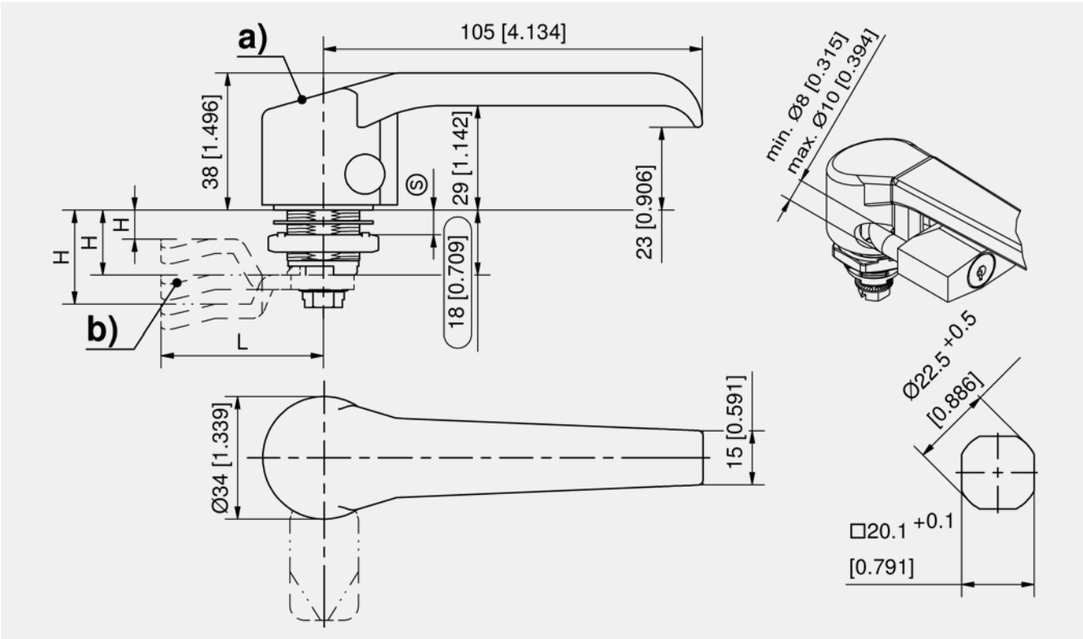

L-handle for padlock

	Part Number	Housing length	Installation type	Delivery Unit
a)	200-9481.00-00000	18 mm	screw-on	1 pc.

Accessories
b) 154, 292 1-102 **Cams L35/45 Steel**
b) 161 1-262 **Cams variable**
b) 156 7-105 **Cams L35/45 Stainless Steel**

Assembly options
200-0019.00-00000 **Assembling cam 90° to handle without o-ring**
200-0020.00-00000 **Assembling cam, LH door**

7-100

◂ all product details on DIRAK.com

L-Wing-Handle for Padlock Pr20.1 L18 [1-651]

Advantages

- For the standard cutout and additional hole for the padlock eyelet.
- The 2-point fixing prevents tempering.
- IP65 according to DIN EN 60529 by o-ring, flat external seal and washer (optional).
- RH / LH application.
- The eyelet for the padlock, also used as a stop, is asymmetric and can be turned for RH or LH doors (door closed).
- In closed position the wing handle is always fully vertical.

Materials

- **Housing, stop and handle:** zinc die, black
- **Nut and hex screw:** steel
- **Internal wave washer:** steel, zinc plated

Remarks

(S) Door-thickness max. 8mm

1. closed version
2. RH version
3. LH version

Please configure the quarter-turn with a cam.

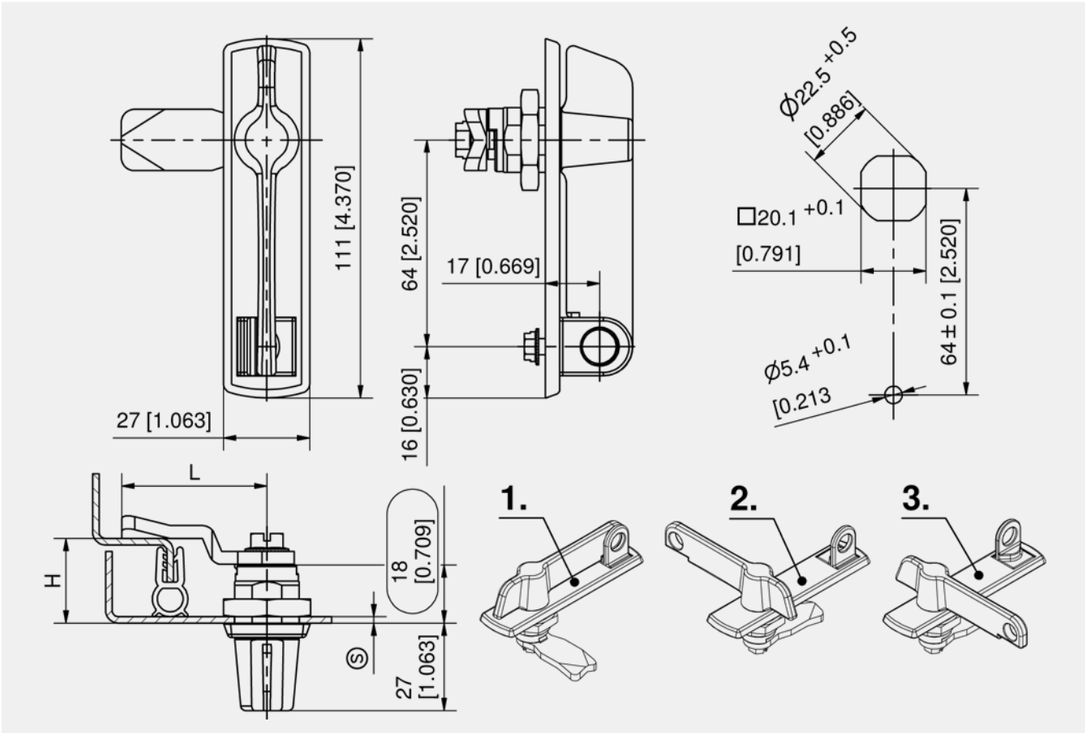

L-wing handle for padlock

Part Number	Housing length	Installation type	Delivery Unit
281-9101.00-00000	18 mm	screw-on	10 pcs.

Accessories
154, 292 1-102 **Cams L35/45 Steel**
161 1-262 **Cams variable**
200-1001.00-00000 **O-ring 12 x 2.0mm**
200-0904.00-00000 **Flat external seal Ø21.8mm / 26.5mm**
832-0125.00-00005 **Washer**

all product details ▸ on DIRAK.com

1-651

L-Handle for Padlock Pr20.1 L18

[1-153]

Advantages

- IP65 according to DIN EN 60529.
- RH / LH application.

Materials

- **L-handle, hook and housing:** zinc die, black
- **Both threaded shafts in handle and hook:** steel, zinc plated
- **O-ring:** NBR

Remarks

(S) Door-thickness max. 5mm

Please configure the quarter-turn with a cam.

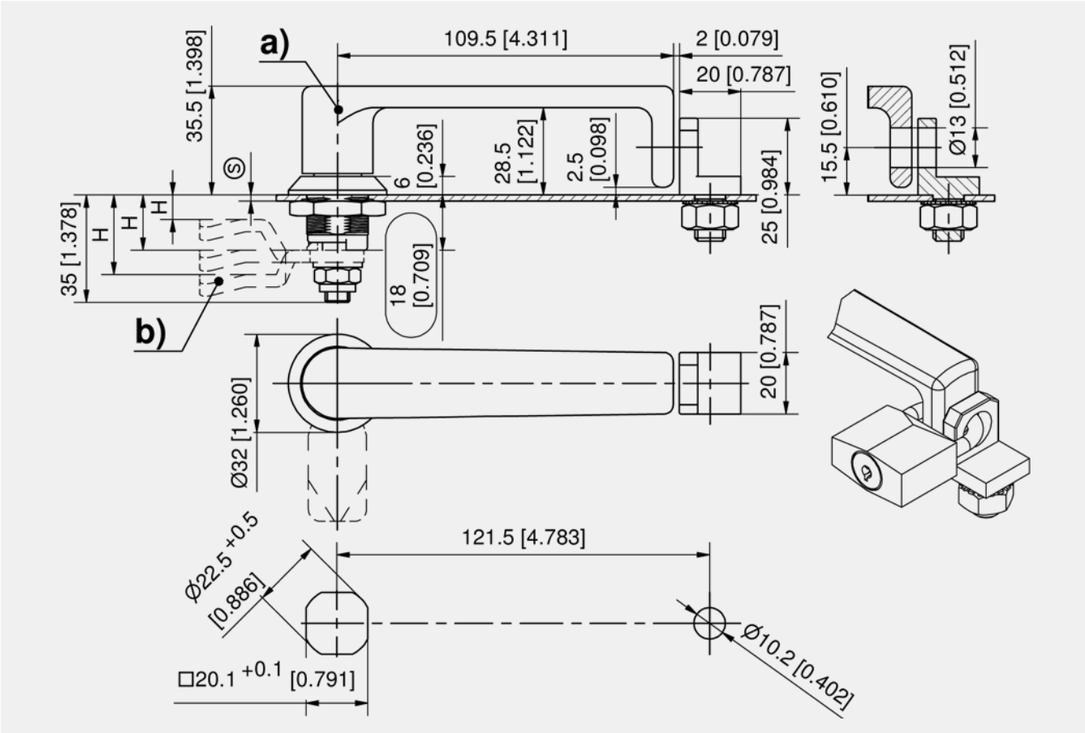

Quarter-Turn with L-handle for padlock

	Part Number	Housing length	Installation type	Delivery Unit
a)	100-9413.00-00000	18 mm	screw-on	1 pc.

	Accessories
b)	154, 292 1-102 **Cams L35/45 Steel**
b)	161 1-262 **Cams variable**

1-153

◂ all product details on DIRAK.com

Quarter-Turn with L-Handle for Padlock Pr20.1 L18 Stainless Steel

[7-104]

Advantages

- IP65 according to DIN EN 60529 with 2 o-rings.
- RH / LH application.

Materials

- **L-Handle, housing and hook:** AISI 316
- **O-rings:** NBR

Remarks

(S) Door-thickness max. 5mm

Please configure the quarter-turn with a cam.

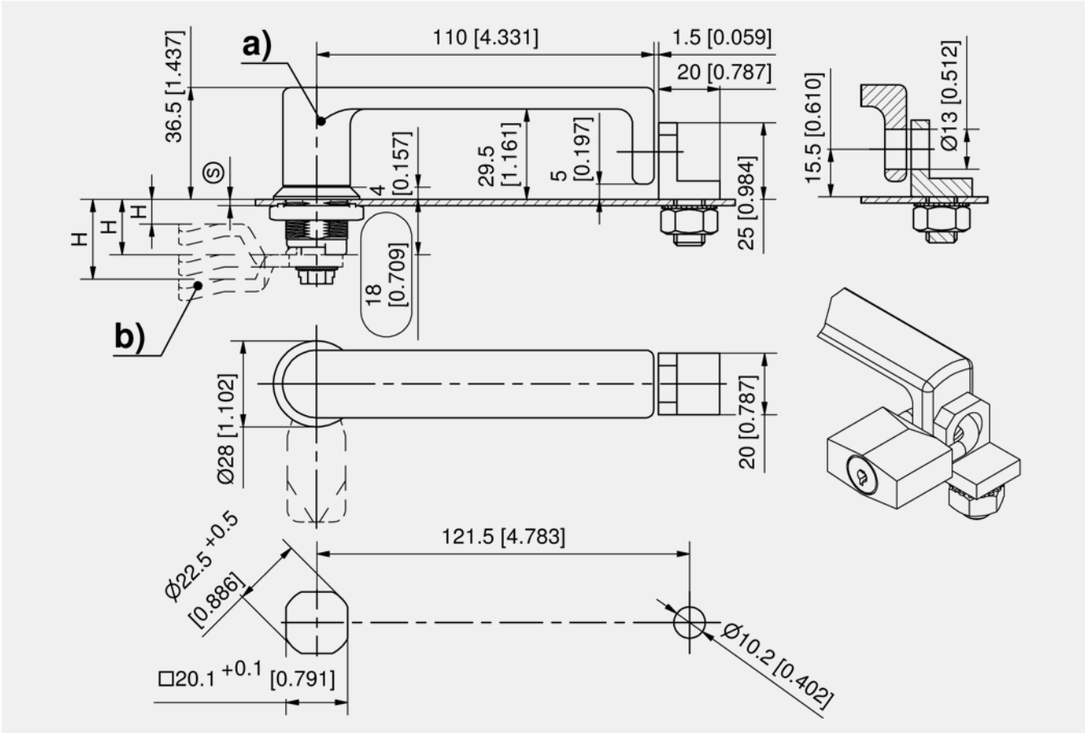

Quarter-Turn with L-handle for padlock

	Part Number	Housing length	Installation type	Delivery Unit
a)	200-9493.00-00000	18 mm	screw-on	1 pc.

	Accessories
b)	154, 292 1-102 **Cams L35/45 Steel**
b)	161 1-262 **Cams variable**
b)	156 7-105 **Cams L35/45 Stainless Steel**

all product details ▸ on DIRAK.com

7-104

DST Bowed Handle with Quarter-Turn

[6-1110DST]

Advantages

- Bowed handle with DIRAK-SNAP-Technology and quarter-turn, with cylinder or for insert.
- Rectangular cutout guarantees a perfect alignment.
- The installation is effected by a simple push into appropriate cutouts.
- The housing for cylinder or insert can be turned by 90° and the handle can be used for RH / LH, horizontal and vertical applications.
- Can be pre-assembled upon request.
- Tool-less, vibration-proof installation also in closed profiles.

Materials

- **Handle:** zinc die, matte chrome plated
- **Other surfaces on request.**
- **Housing:** zinc die
- **Snap wedges:** sintered steel
- **Grounding clip:** stainless steel

Remarks

Attention: H-dimension of the cam **≥14mm**

Please configure the quarter-turn with a cam.

In case of applying a cylinder the 3-point cam should **not** be used.

e) grounding clip

Please contact DIRAK for the part number of a completely pre-assembled handle.

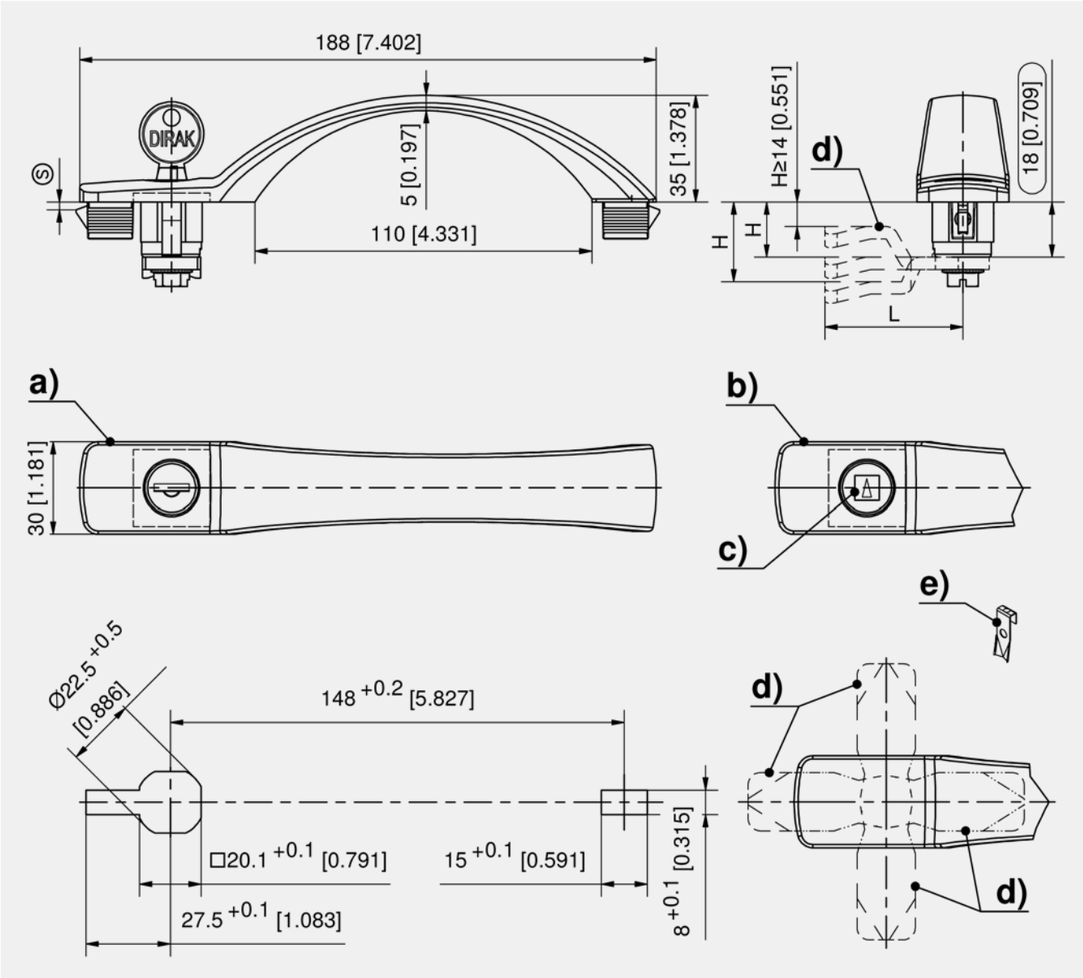

6-1110DST

all product details on DIRAK.com

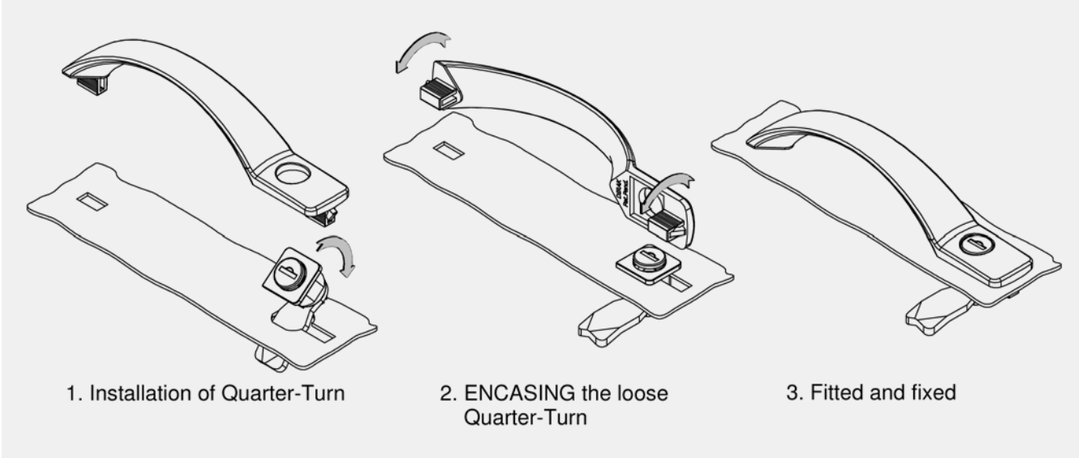

Bowed handle with cylinder

	Part Number	Clamping range (S)	Latching type	Grounding type	Installation type	Delivery Unit
a)	413-9301.00-00012	0.8 - 1.5 mm	keyed alike DIRAK 1333		tool-less	1 pc.
a)	413-9301.00-00016	1.3 - 2.0 mm	keyed alike DIRAK 1333		tool-less	1 pc.
a)	413-9301.00-00020	1.8 - 2.5 mm	keyed alike DIRAK 1333		tool-less	1 pc.
a)	413-9302.00-00012	0.8 - 1.5 mm	keyed different		tool-less	1 pc.
a)	413-9302.00-00016	1.3 - 2.0 mm	keyed different		tool-less	1 pc.
a)	413-9302.00-00020	1.8 - 2.5 mm	keyed different		tool-less	1 pc.
a)	413-9305.00-00012	0.8 - 1.5 mm	keyed alike DIRAK 1333	Grounding clip	tool-less	1 pc.
a)	413-9305.00-00016	1.3 - 2.0 mm	keyed alike DIRAK 1333	Grounding clip	tool-less	1 pc.
a)	413-9305.00-00020	1.8 - 2.5 mm	keyed alike DIRAK 1333	Grounding clip	tool-less	1 pc.
a)	413-9306.00-00012	0.8 - 1.5 mm	keyed different	Grounding clip	tool-less	1 pc.
a)	413-9306.00-00016	1.3 - 2.0 mm	keyed different	Grounding clip	tool-less	1 pc.
a)	413-9306.00-00020	1.8 - 2.5 mm	keyed different	Grounding clip	tool-less	1 pc.

Bowed handle for insert

	Part Number	Clamping range (S)	Grounding type	Installation type	Delivery Unit
b)	413-9303.00-00012	0.8 - 1.5 mm		tool-less	1 pc.
b)	413-9303.00-00016	1.3 - 2.0 mm		tool-less	1 pc.
b)	413-9303.00-00020	1.8 - 2.5 mm		tool-less	1 pc.
b)	413-9307.00-00012	0.8 - 1.5 mm	Grounding clip	tool-less	1 pc.
b)	413-9307.00-00016	1.3 - 2.0 mm	Grounding clip	tool-less	1 pc.
b)	413-9307.00-00020	1.8 - 2.5 mm	Grounding clip	tool-less	1 pc.

	Accessories
c)	150 1-101 **Inserts Pr20.1**
d)	154, 292 1-102 **Cams L35/45 Steel**
d)	161 1-262 **Cams variable**
	175, 295 2-151 **2-, 3- and 4-Point Cam Adapter**
	768 6-100 **Wrench**
	766 6-101 **Universal key**

Compression Latch Pr22.1 with Flap Stainless Steel [7-071]

22.1

DIN 61373

R L

IP 65/67

15 Nm

RoHS WEEE

Advantages

- The flap is standing upright (90°) in unlocked position and closes, when compression latch is closed securely.
- The flap indicates locking position and protects against dust and water.
- Compression 6 mm.
- Seismic-proof according to GR-63-CORE, Issue 4.
- Vibration-proof according to DIN EN 61373.
- IP65/IP67 according to DIN EN 60529.
- RH and LH version.
- Grounding by grounding nut.
- Flat external seal (1.) damps the flap.
- Circumferential handle bar allows easy handling also with work- or safety gloves.

Materials

- **Housing, flap, insert, grounding nut:** AISI 316
- **Screw, nut and spring:** stainless steel
- **O-ring:** NBR

Remarks

(S) Door-thickness max. 8mm

On request available with reflecting sticker on the inside.

Please configure the quarter-turn with insert and cam.

Version b): secured against unintended opening at low pressure or high-speed.

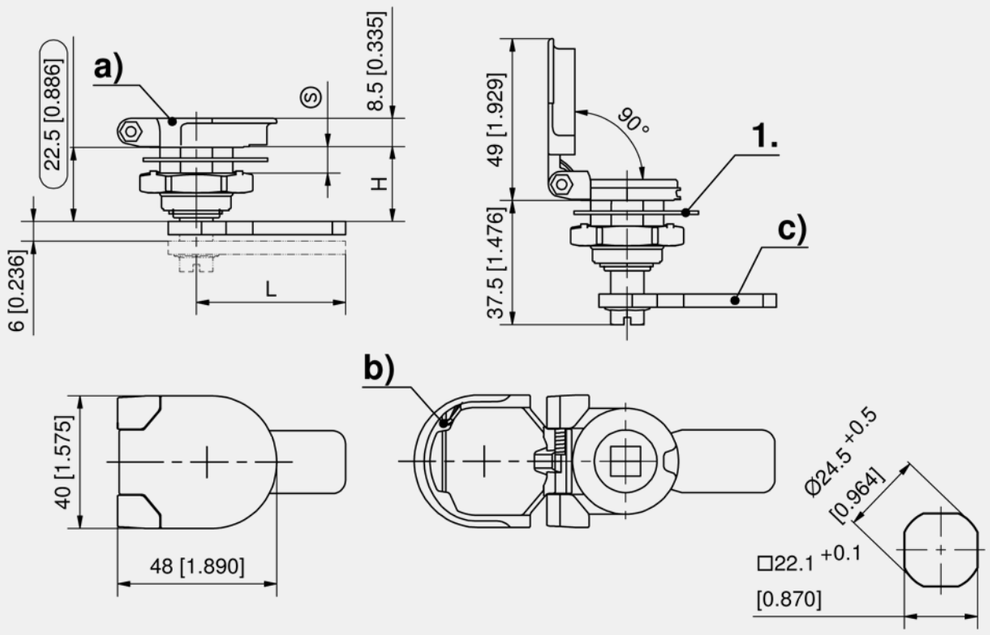

Compression latch with insert, version RH, closing left

	Part Number	Insert	Installation type	Delivery Unit
a)	248-9603.00-00001	Double bit 3mm pin	screw-on	1 pc.
a)	248-9603.00-00002	Double bit 5mm pin	screw-on	1 pc.
a)	248-9603.00-00003	Square 8mm	screw-on	1 pc.
a)	248-9603.00-00004	Triangular 8mm	screw-on	1 pc.
a)	248-9603.00-00005	Conical square 9mm	screw-on	1 pc.

Compression latch with insert, version LH, closing right

	Part Number	Insert	Installation type	Delivery Unit
a)	248-9652.00-00001	Double bit 3mm pin	screw-on	1 pc.
a)	248-9652.00-00002	Double bit 5mm pin	screw-on	1 pc.
a)	248-9652.00-00003	Square 8mm	screw-on	1 pc.
a)	248-9652.00-00004	Triangular 8mm	screw-on	1 pc.
a)	248-9652.00-00005	Conical square 9mm	screw-on	1 pc.

Compression latch with insert, version RH, closing left, spring secured

	Part Number	Insert	Installation type	Delivery Unit
b)	248-9604.00-00001	Double bit 3mm pin	screw-on	1 pc.
b)	248-9604.00-00002	Double bit 5mm pin	screw-on	1 pc.
b)	248-9604.00-00003	Square 8mm	screw-on	1 pc.
b)	248-9604.00-00004	Triangular 8mm	screw-on	1 pc.
b)	248-9604.00-00005	Conical square 9mm	screw-on	1 pc.

Compression latch with insert, version LH, closing right, spring secured

	Part Number	Insert	Installation type	Delivery Unit
b)	248-9653.00-00001	Double bit 3mm pin	screw-on	1 pc.
b)	248-9653.00-00002	Double bit 5mm pin	screw-on	1 pc.
b)	248-9653.00-00003	Square 8mm	screw-on	1 pc.
b)	248-9653.00-00004	Triangular 8mm	screw-on	1 pc.
b)	248-9653.00-00005	Conical square 9mm	screw-on	1 pc.

	Accessories
c) 159	7-105.01 **Cams L35/45 Stainless Steel**
768	6-100 **Wrench**
766	6-101 **Universal key**
770	6-105 **Keys for the Railway Sector**

	Specific accessories
1.)	200-0916.00-00000 **Flat external seal for PS 7-071**

7-071

all product details on DIRAK.com

Compression Latch Pr22.1 with Flap

[1-075]

DIN 61373 · 22.1 · R L · IP 65/67 · 15 Nm · RoHS WEEE

Advantages

- Compression 6mm.
- The open flap indicates locking position and protects against dust and water.
- The flap is standing upright (90°) in unlocked position.
- The spring-loaded flap first closes, when compression latch is closed securely.
- Seismic-proof according GR-63-CORE, Issue 4.
- Vibration-proof according to DIN EN 61373.
- IP65/IP67 according to DIN EN 60529.
- RH and LH version.
- Grounding by grounding nut.

Materials

- **Housing, flap and insert:** zinc die, black
- **Grounding nut:** zinc die, untreated
- **Screw, nut and spring:** stainless steel
- **O-rings:** NBR

Remarks

(S) Door-thickness max. 8mm

Please configure the quarter-turn with insert and cam.

The H-dimension can be varied by the cranking of the cams.

1. stroke 6mm
2. o-ring
3. single sided grounding nut

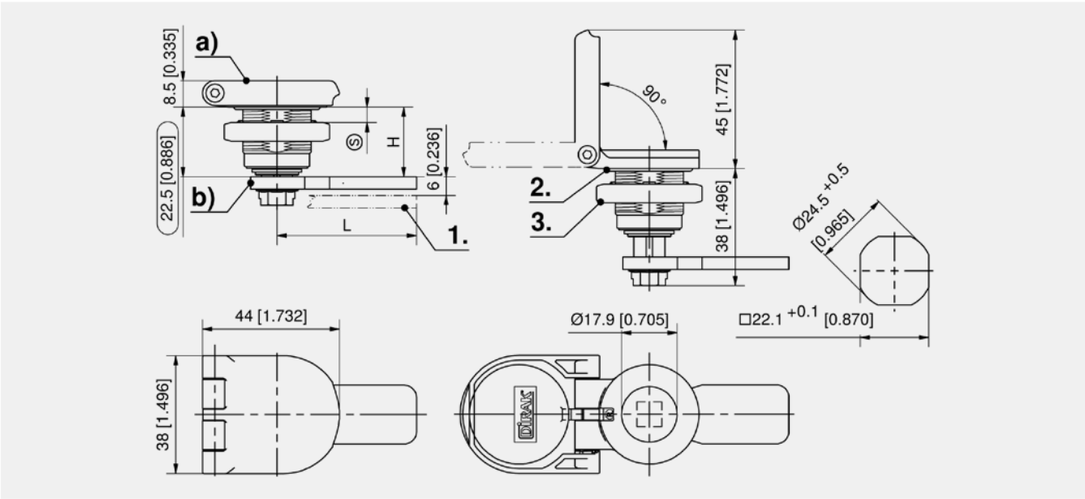

Compression latch with insert, version RH, closing left

	Part Number	Insert	Installation type	Delivery Unit
a)	248-9601.00-00001	Double bit 3mm pin	screw-on	1 pc.
a)	248-9601.00-00002	Double bit 5mm pin	screw-on	1 pc.
a)	248-9601.00-00003	Square 8mm	screw-on	1 pc.
a)	248-9601.00-00004	Triangular 8mm	screw-on	1 pc.
a)	248-9601.00-00005	Conical square 9mm	screw-on	1 pc.

Compression latch with insert, version LH, closing right

	Part Number	Insert	Installation type	Delivery Unit
a)	248-9651.00-00001	Double bit 3mm pin	screw-on	1 pc.
a)	248-9651.00-00002	Double bit 5mm pin	screw-on	1 pc.
a)	248-9651.00-00003	Square 8mm	screw-on	1 pc.
a)	248-9651.00-00004	Triangular 8mm	screw-on	1 pc.
a)	248-9651.00-00005	Conical square 9mm	screw-on	1 pc.

	Accessories
b)	158 1-102.01 **Cams L45 Steel**
	768 6-100 **Wrench**
	766 6-101 **Universal key**
	770 6-105 **Keys for the Railway Sector**

all product details on DIRAK.com
1-075

DST Quarter-Turn TRENTA Pr30 L18

[1-082DST]

Advantages

- Flush quarter-turn for cutout 30x30mm.
- Rectangular cutout guarantees a perfect alignment.
- IP65 according to DIN EN 60529 by sealing kit (optional).
- RH / LH application.
- Grounding by grounding clip (optional).
- Available pre-assembled on request.
- The quarter-turn can be snapped-in as a completely pre-assembled unit.
- Installation tool-less and vibration-proof.
- Blind installation in closed profiles.

Materials

- **Housing:** zinc die, black
- **Snap wedges:** sintered steel
- **Clip:** spring steel

Remarks

Attention: H-dimension not less than 14mm!

Please configure the quarter-turn with insert and cam.

1. the cutouts can be provided with an indentation to avoid errors.

DST · R L · IP 65 · RoHS WEEE

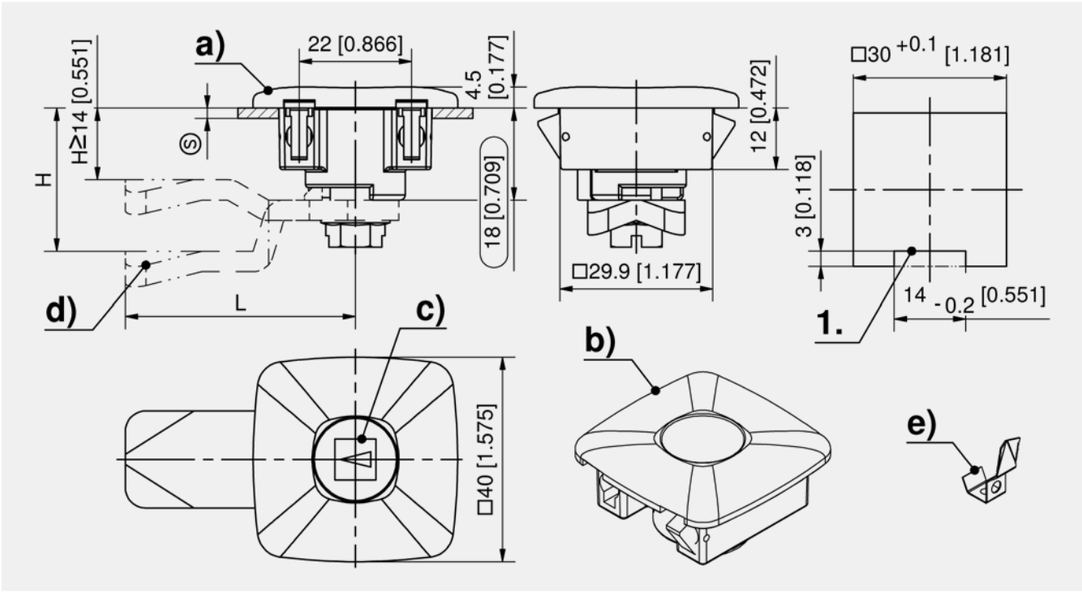

Quarter-Turn TRENTA

	Part Number	Quantity SNAP wedges	Clamping range (S)	Installation type	Delivery Unit
a)	406-9001.00-00015	4, for H.D. applications	0.8 - 1.5 mm	tool-less	10 pcs.
a)	406-9001.00-00020	4, for H.D. applications	1.3 - 2.0 mm	tool-less	10 pcs.
a)	406-9001.00-00022	4, for H.D. applications	1.5 - 2.2 mm	tool-less	10 pcs.
b)	406-9002.00-00015	2, for light applications	0.8 - 1.5 mm	tool-less	10 pcs.
b)	406-9002.00-00020	2, for light applications	1.3 - 2.0 mm	tool-less	10 pcs.
b)	406-9002.00-00022	2, for light applications	1.5 - 2.2 mm	tool-less	10 pcs.

	Accessories
c)	150 1-101 **Inserts Pr20.1**
d)	154, 292 1-102 **Cams L35/45 Steel**
d)	161 1-262 **Cams variable**
	764 292-0306.80-02530 **Tool for uninstallation**
	768 6-100 **Wrench**
	766 6-101 **Universal key**

	Function extension
e)	200-1105.93-00000 **Grounding clip**
	209-9004.00-00000 **Sealing kit IP65 for Qurater-Turns Pr30**

all product details on DIRAK.com
1-082DST

Quarter-Turn Polyamide PrA L18

[1-099]

Advantages

- For cutout PrA.
- Clip-in installation.
- IP65 according to DIN EN 60529 by sealing kit (optional).
- RH / LH application by rotatable bottom part.
- Grounding by grounding clip (optional).
- Also a 3-point cam can be pre-assembled.
- The quarter-turn can be clip-in as a completely pre-assembled unit.
- Tool-less installation.

Materials

- **Housing:** PA, black
- **Bottom:** zinc die, zinc plated

Remarks

Attention: H-dimension of the cam not less than 16mm

Please configure the quarter-turn with insert and cam.

By using additional extensions PS 3-136 this quarter-turn can also be applied for cutouts B and C.

1. rotatable bottom
2. sealing kit

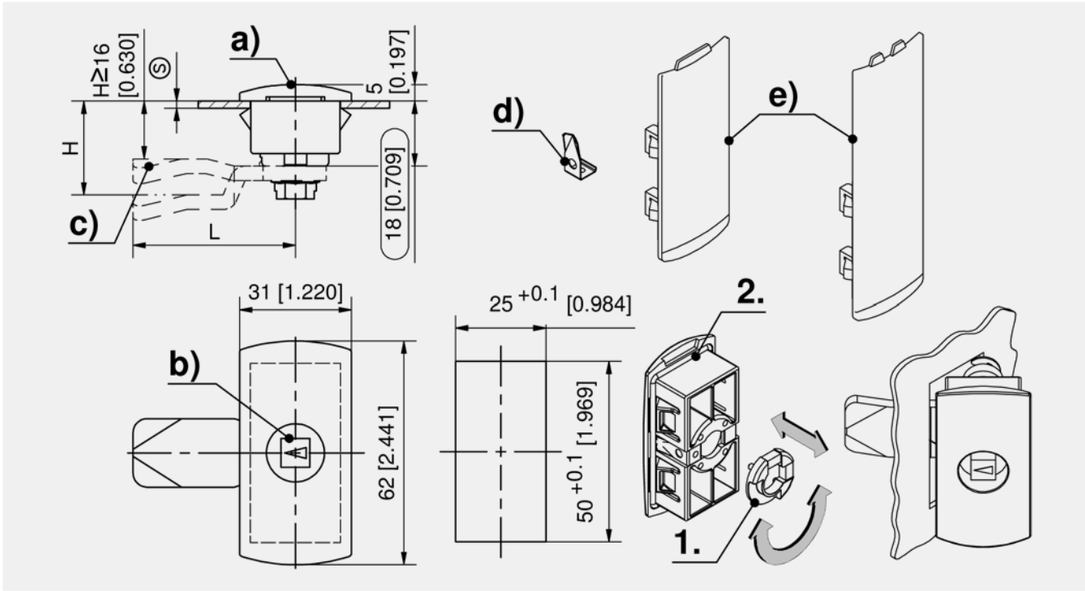

Quarter-Turn housing with rotatable bottom and o-ring

	Part Number	Clamping range (S)	Housing length	Installation type	Delivery Unit
a)	408-9305.00-00010	0.8 - 1.3 mm	18 mm	tool-less	50 pcs.
a)	408-9305.00-00015	1.3 - 1.8 mm	18 mm	tool-less	50 pcs.
a)	408-9305.00-00020	1.8 - 2.3 mm	18 mm	tool-less	50 pcs.

	Accessories
b)	150 1-101 **Inserts Pr20.1**
c)	154, 292 1-102 **Cams L35/45 Steel**
e)	321 3-136 **Cutout-Cover PrA / PrB / PrC**
	768 6-100 **Wrench**
	766 6-101 **Universal key**

	Assembly options
	200-0002.00-00000 **Assembling cam with o-ring**
	200-0020.00-00000 **Assembling cam, LH door**
	200-0021.00-00000 **Assembling cam, RH door**

	Function extension
d)	200-1104.93-00000 **Grounding clip**
2.)	209-9005.00-00000 **Sealing kit IP65 for Quarter-Turns PrA 1-099**

1-099

◂ all product details on DIRAK.com

DST Quarter-Turn Polyamide PrA L18

[1-100DST]

Advantages

- For cutout PrA.
- Rectangular cutout guarantees a perfect alignment.
- IP65 according to DIN EN 60529.
- For IP65 according to DIN EN 60529 o-ring (200-1001.00-00000) for insert (optional).
- RH / LH application by rotatable bottom part.
- Grounding by grounding clip.
- Also a 3-point cam can be pre-assembled.
- The Quarter-turn can be snapped-in as a completely pre-assembled unit.
- Installation tool-less and vibration-proof.
- Blind installation in closed profiles.

Materials

- **Housing:** PA, black
- **Bottom:** zinc die, zinc plated
- **Snap wedges:** sintered steel, zinc plated
- **Grounding clip:** stainless steel
- **O-ring:** NBR, black

Remarks

Attention: H-dimension of the cam not less than 16mm (5/8).

Please configure the Quarter-turn with insert and cam.

With escutcheons, this quarter-turn can also be used for cutouts PrB and PrC (see product system 3-136).

1. rotatable bottom for RH/LH
2. o-ring

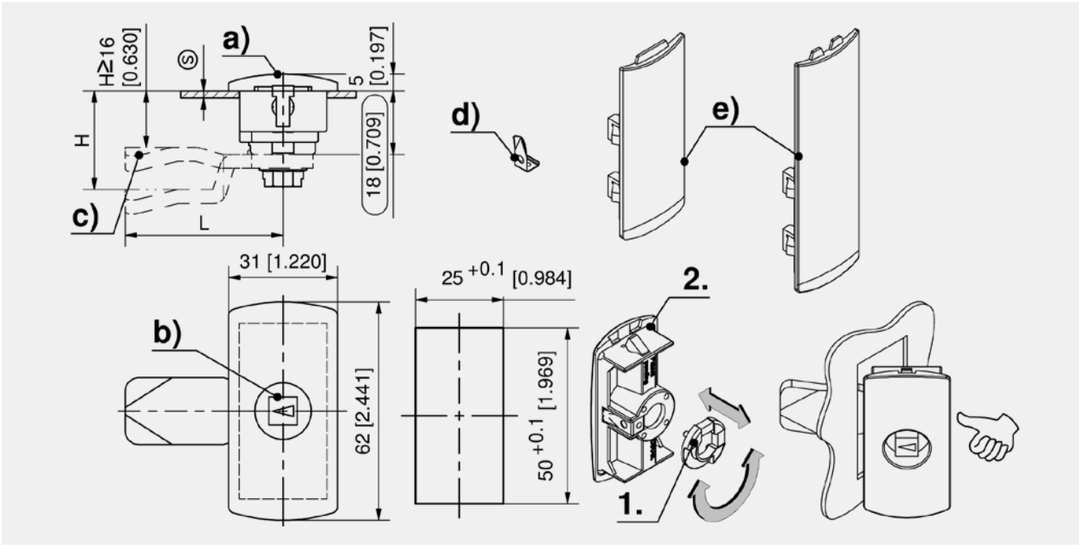

Quarter-Turn, PA

	Part Number	Clamping range (S)	Grounding type	Installation type	Delivery Unit
a)	408-9301.00-00015	0.8 - 1.5 mm	Grounding clip	tool-less	10 pcs.
a)	408-9301.00-00020	1.3 - 2.0 mm	Grounding clip	tool-less	10 pcs.
a)	408-9301.00-00025	1.8 - 2.5 mm	Grounding clip	tool-less	10 pcs.
a)	408-9301.00-00030	2.3 - 3.0 mm	Grounding clip	tool-less	10 pcs.
a)	408-9301.00-00035	2.8 - 3.5 mm	Grounding clip	tool-less	10 pcs.
a)	408-9302.00-00015	0.8 - 1.5 mm		tool-less	10 pcs.
a)	408-9302.00-00020	1.3 - 2.0 mm		tool-less	10 pcs.
a)	408-9302.00-00025	1.8 - 2.5 mm		tool-less	10 pcs.
a)	408-9302.00-00030	2.3 - 3.0 mm		tool-less	10 pcs.
a)	408-9302.00-00035	2.8 - 3.5 mm		tool-less	10 pcs.

	Accessories
b)	150 1-101 **Inserts Pr20.1**
c)	154, 292 1-102 **Cams L35/45 Steel**
c)	161 1-262 **Cams variable**
c)	175, 295 2-151 **2-, 3- and 4-Point Cam Adapter**
	768 6-100 **Wrench**
	766 6-101 **Universal key**

	Function extension
e)	321 3-136 **Cutout-Cover PrA / PrB / PrC**
2.)	200-1001.00-00000 **O-ring 12 x 2.0mm**

all product details ▸ on DIRAK.com

1-100DST

Quarter-Turn PrA L16

[2-040]

A

R L

IP 65

RoHS WEEE

Advantages

- For cutout type A 50 x 25.
- IP65 according to DIN EN 60529 by sealing kit (optional).
- RH/ LH application.
- Grounding by grounding clip (optional).
- Pre-assembled deliverable on request.
- The quarter-turn can be installed pre-assembled.
- Pre-assembly of 3-point cam also possible.

Materials

- **Bearing plate:** zinc die, untreated
- **Escutcheons:** PA, black
- **Self tapping screw:** steel, zinc plated

Remarks

Height 16mm.

Min. A dimension = 8mm.

Escutcheon b2) only in use with insert double bit.

For door-thicknesses greater than 3.5mm longer screws for the installation are required.

Please configure the quarter-turn with insert and cam.

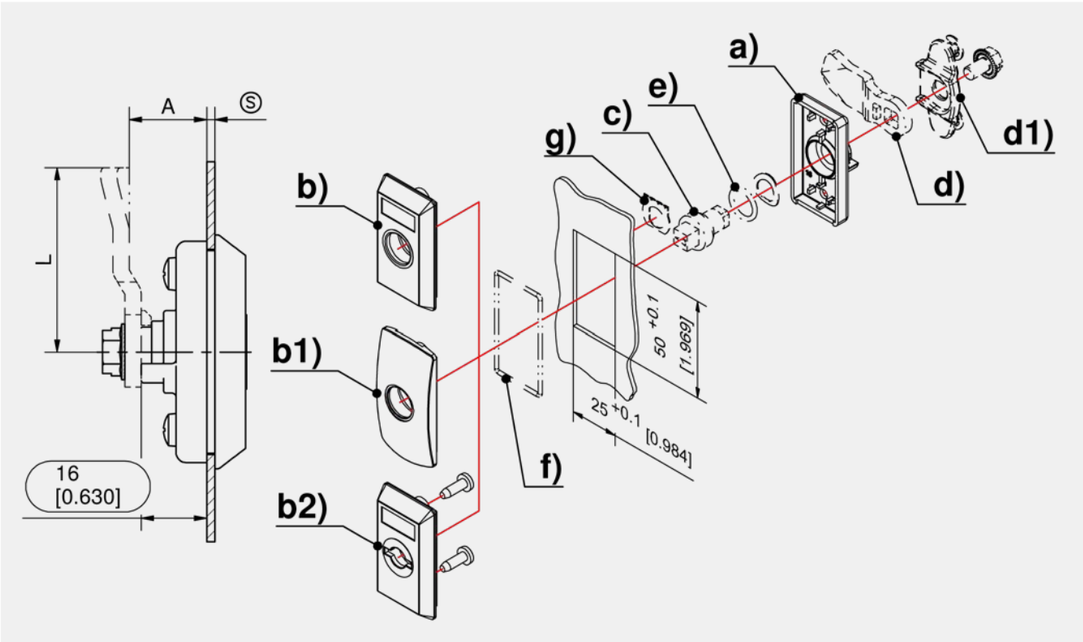

Bearing plate and escutcheons

	Part Number	Name	Material	Surface	Door-thickness (S)	Installation type	Delivery Unit
a)	207-2707.00-00016	Bearing plate 16mm	zinc die	untreated		screw-on	10 pcs.
b)	208-9306.00-00000	Escutcheon PrA	PA	black	1.3 - 3.5 mm	screw-on	1 pc.
b1)	208-9307.00-00000	Escutcheon PrA SOFTLINE	PA	black	1.3 - 3.5 mm	screw-on	1 pc.
b2)	208-9308.00-00000	Escutcheon for double bit PrA	PA	black	1.3 - 3.5 mm	screw-on	1 pc.

	Accessories
c)	150 1-101 **Inserts Pr20.1**
d)	154, 292 1-102 **Cams L35/45 Steel**
d1)	176, 296 2-151.04 **3-Point Cam Adapter**
	768 6-100 **Wrench**
	766 6-101 **Universal key**

	Function extension
e)- f)	209-9007.00-00000 **Sealing kit IP65 for Quarter-Turns PrA**
g)	302, 366 3-011 **Grounding Clip Stainless Steel**

2-040

◂ all product details on DIRAK.com

Dish Handle PrA Stainless Steel

[7-072]

Advantages

- Dish handle for 2- or 3-point cam.
- IP65 according to DIN EN 60529.
- **Properties of material AISI 316 Ti:** The titanium increases the corrosion resistance particularly the intercrystalline corrosion at the grain boundaries.

Materials

- **Dish handle and adapter plate:** AISI 316Ti, cast
- **Flat external seal:** Inducon

Remarks

(S) Door-thickness 2mm

For flush area mounting please order additionally:

adapter plate and flat external seal.

Please configure the quarter-turn with insert and cam.

1. cutout dish handle surface mounted
2. cutout flush area
3. e.g. countersunk screw M6

A

IP 65

RoHS WEEE

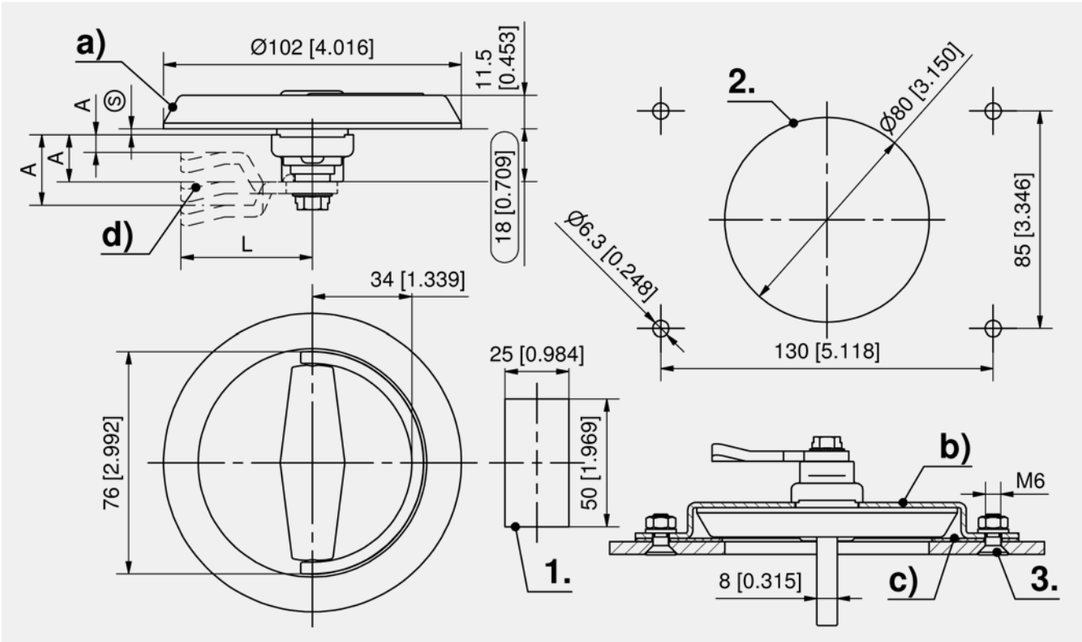

Dish handle

	Part Number	Installation type	Delivery Unit
a)	208-9638.00-00000	screw-on	1 pc.

Accessories for dish handle

	Part Number	Name	Fastening type	Delivery Unit
b)	207-3605.90-00000	Adapter plate	screw-on	1 pc.
c)	200-0905.00-00000	Flat external seal		1 pc.

	Accessories
d)	156 7-105 **Cams L35/45 Stainless Steel**

all product details ▸ on DIRAK.com

7-072

Quarter-Turn - Firefighting Stainless Steel

[7-331]

Advantages

- Both the triangular adapter on the fireman's axe to DIN 14924 and the hydrant spanner A or B to DIN 3223 can be used as a key.
- **Properties of material AISI 316 Ti:** the titanium increases the corrosion resistance particularly the intercrystalline corrosion at the grain boundaries.

Materials

- **Housing, insert, spring washer and nut:** AISI 316
- **Serrated screw:** AISI 304

Remarks

(S) Door-thickness max. 5mm

Please configure the quarter-turn with a cam.

Price and delivery time on request.

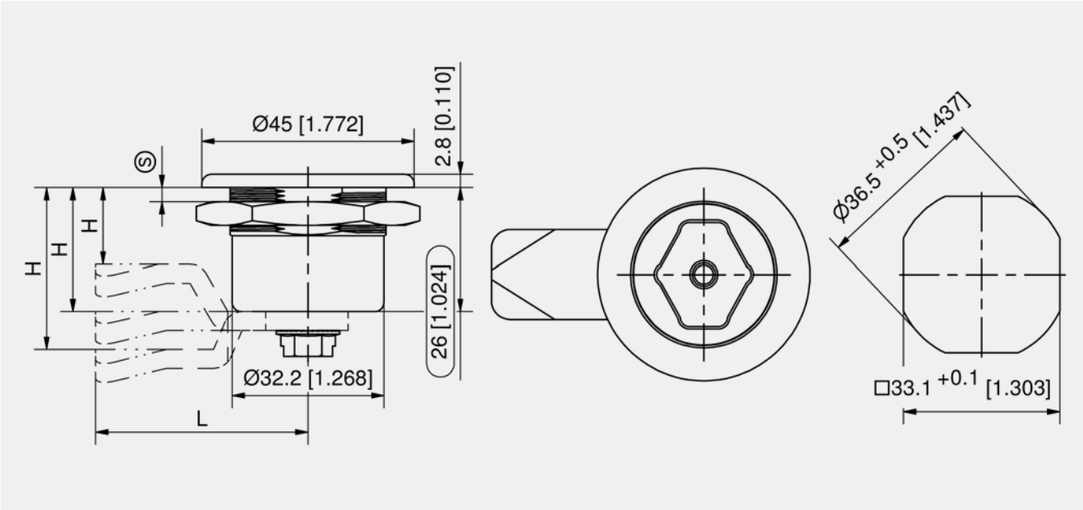

Quarter-Turn

Part Number	Housing length	Installation type	Delivery Unit
290-9401.00-00000	26 mm	screw-on	1 pc.

Accessories
156 200-0506.00-00000 **Cam**
156 200-0508.00-00000 **Cam**
156 200-0510.00-00000 **Cam**
156 200-0514.00-00000 **Cam**
156 200-0516.00-00000 **Cam**
156 200-0518.00-00000 **Cam**
156 200-0520.00-00000 **Cam**
156 200-0522.00-00000 **Cam**
156 200-0524.00-00000 **Cam**
156 200-0526.00-00000 **Cam**
156 200-0528.00-00000 **Cam**
156 200-0532.00-00000 **Cam**

Accessories
156 200-0550.00-00000 **Cam**

Assembly options
200-0001.00-00000 **Assembling cam without o-ring**

7-331

◂ all product details on DIRAK.com

Hygiene Compression Latch Pr20.1 SW13 Stainless Steel

[7-081.04HD]

Advantages

- Compression 4mm.
- The complete quarter-turn is certified and tested according to: GS-NV 2:2013/06 Principles for the testing of food processing machines GS-NV 6:2013/06 Principles for the testing of hygiene requirements. Machine Ordinance: DIN EN 1672-2:2009.
- DGUV Test Certificate.
- Vibration-proof according to DIN EN 61373.
- IP 65/67/69K according to DIN EN 60529 / DIN 40050.
- RH and LH version.
- The compression latch is delivered with assembled cam and can be screwed into the cutout completely pre-assembled.

Materials

- **Housing, insert, nut, cam:** AISI 316
- **Seal:** silicone, blue, FDA conform (Food and Drug Administration)

Remarks

(S) Door-thickness max. 4mm

1. silicone seal
2. compression 4mm
3. operation

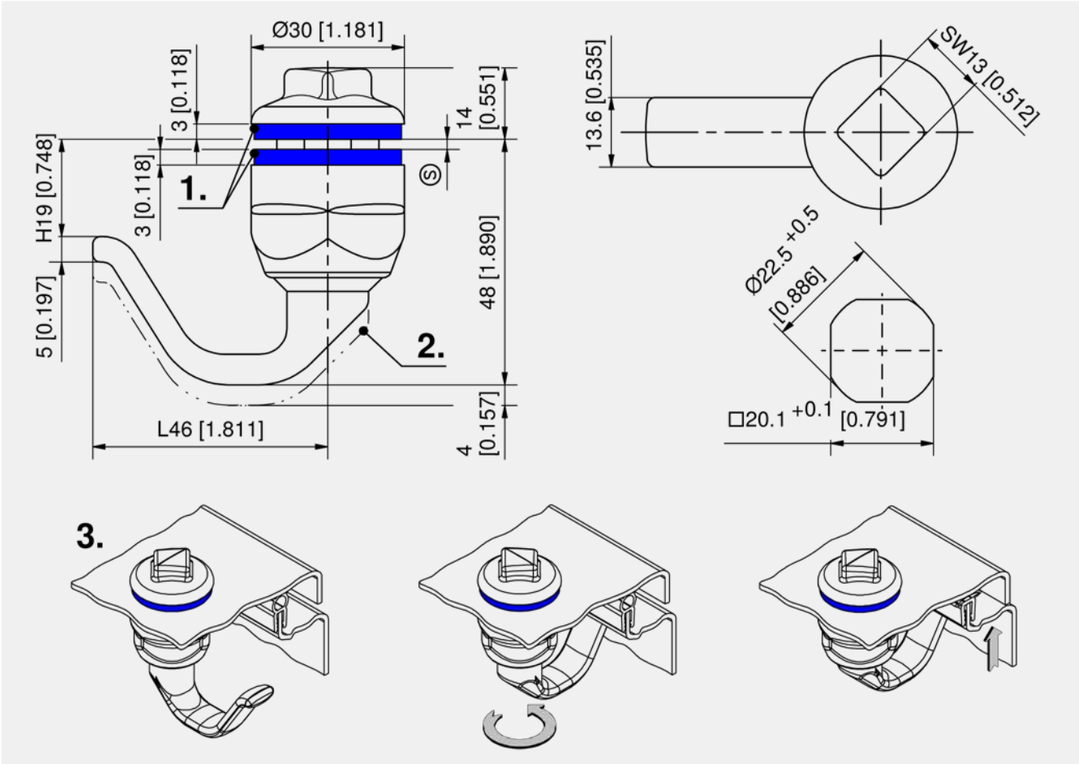

Quarter-Turn with SW13 insert

Part Number	Version	Installation type	Delivery Unit
100-9504.00-00000	RH version	screw-on	1 pc.
100-9505.00-00000	LH version	screw-on	1 pc.

Accessories
767 204-0140.39-05010 **Wrench for SW13**

all product details ▸ on DIRAK.com

7-081.04HD

Quarter-Turn SW13 Pr20.1 L18 Stainless Steel [7-081.01]

Advantages

- Meets hygiene requirements acc. to DIN EN ISO 14159 and DIN EN 1672-2.
- Easy to clean.
- O-rings (FDA conform) prevent dirt deposits and penetration of liquids.
- IP65 / IP67 / 69K according to DIN EN 60529 / DIN 40050.
- RH / LH application.
- Grounding by grounding nut.

Materials

- **Housing, grounding nut and insert:** stainless steel AISI 316L
- **Cam and serrated screw:** stainless steel AISI 304
- **O-rings**: silicone, FDA conform, red or blue

Remarks

(S) Door-thickness max. 8mm

Please configure the quarter-turn with a cam.

1. o-rings

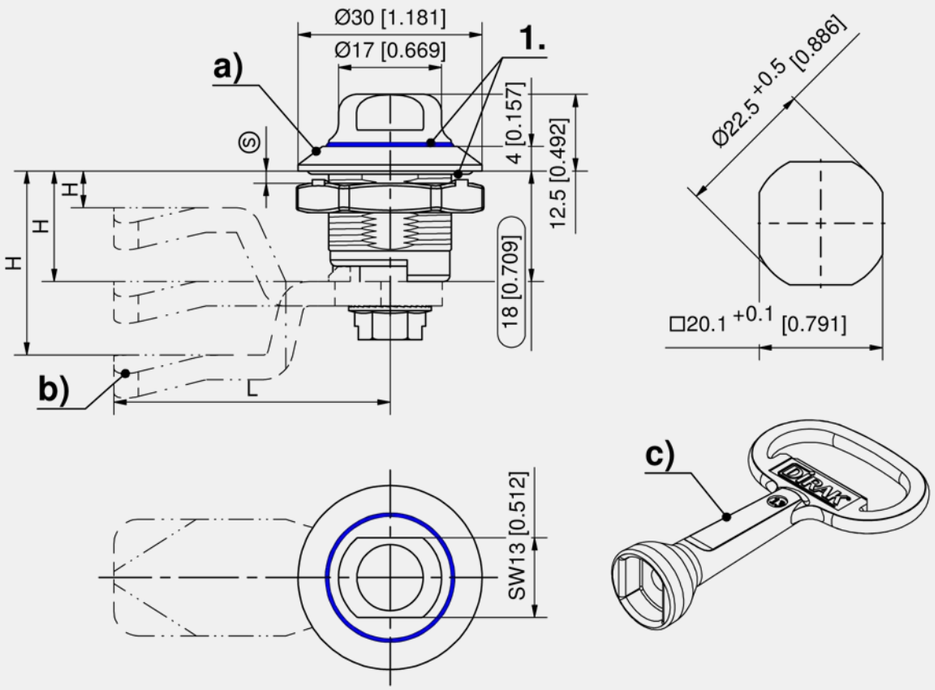

Quarter-Turn

	Part Number	Version	Insert	Installation type	Delivery Unit
a)	100-9508.00-00000	red o-ring	SW13	screw-on	1 pc.
a)	100-9508.00-00001	blue o-ring	SW13	screw-on	1 pc.

	Accessories
b)	156 7-105 **Cams L35/45 Stainless Steel**
c)	767 204-0140.39-05010 **Wrench for SW13**

	Assembly options
	200-0002.00-00000 **Assembling cam with o-ring**

7-081.01

◂ all product details on DIRAK.com

Hygiene Quarter-Turn Pr20.1 L18 SW13 Stainless Steel [7-081.01HD]

Advantages

- Tested according to: GS-NV 2:2013/06 Principles for the testing of food processing machines, GS-NV 6:2013/06 Principles for the testing of hygiene requirements Machine Ordinance: DIN EN 1672-2:2009.
- DGUV Test Certificate.
- Dirt resistant and easy to clean by means of mirror-polish surface and transition radii.
- IP 65/67/69K according to DIN EN 60529 / DIN 40050.
- RH / LH application.
- Grounding by grounding nut.
- Cam can be delivered pre-assembled upon request.
- A pre-assembled quarter-turn can be installed in the cutout.

Materials

- **Housing, insert and grounding nut:** AISI 316
- **Serrated screw:** AISI 304
- **Seal:** silicone, blue, FDA conform (Food and Drug Administration)

Remarks

(S) Door-thickness max. 8mm.

Please configure the quarter-turn with a cam.

1. silicone seal

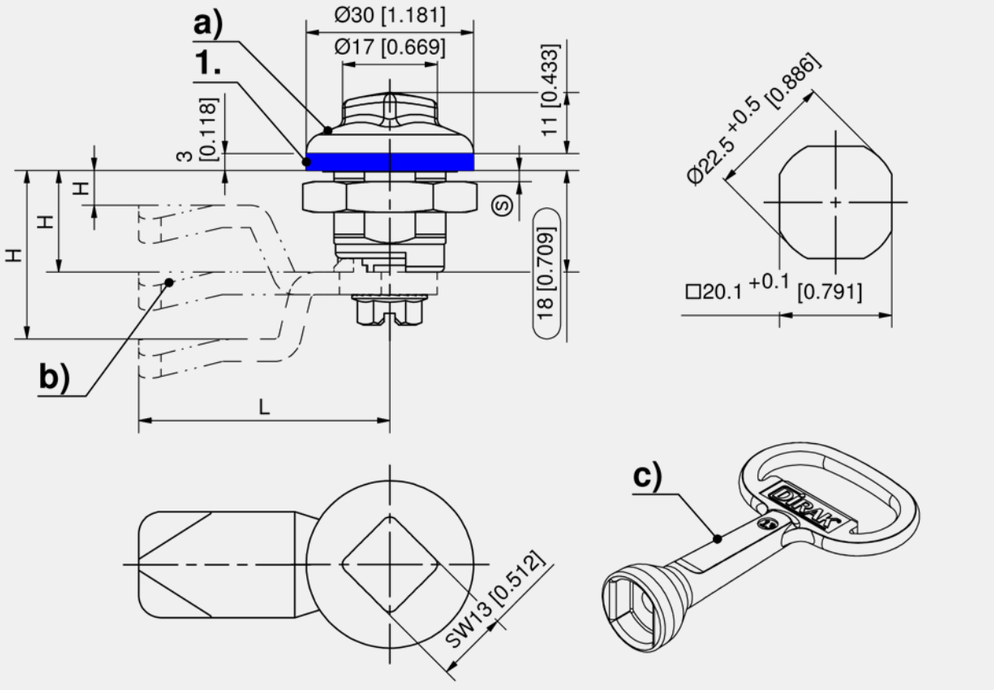

Hygiene Quarter-Turn

	Part Number	Insert	Installation type	Delivery Unit
a)	100-9503.00-00000	SW13	screw-on	1 pc.

	Accessories
b)	156 7-105 **Cams L35/45 Stainless Steel**
c)	767 204-0140.39-05010 **Wrench for SW13**

all product details ▸ on DIRAK.com

7-081.01HD

Quarter-Turn with T-Handle and Cylinder Pr20.1 L18 Stainless Steel

[7-081.02]

Advantages

- Suitable for the food sector and hygienic areas.
- Meets hygiene requirements acc. to DIN EN ISO 14159 and DIN EN 1672-2.
- Polished surface.
- Lockable with cylinder barrel.
- Seal FDA conform.
- IP65/67 according to DIN 60529.
- RH / LH application.
- Grounding by grounding nut.
- Cam can be delivered pre-assembled upon request.
- The pre-assembled Quarter-turn can be installed in the cutout.

Materials

- **Housing, handle and grounding nut:** AISI 316
- **Serrated screw:** AISI 304
- **Seal:** silicone, blue, FDA conform (Food and Drug Administration)

Remarks

(S) Door-thickness max. 8mm

Please configure the quarter-turn with a cam.

1. silicone seal

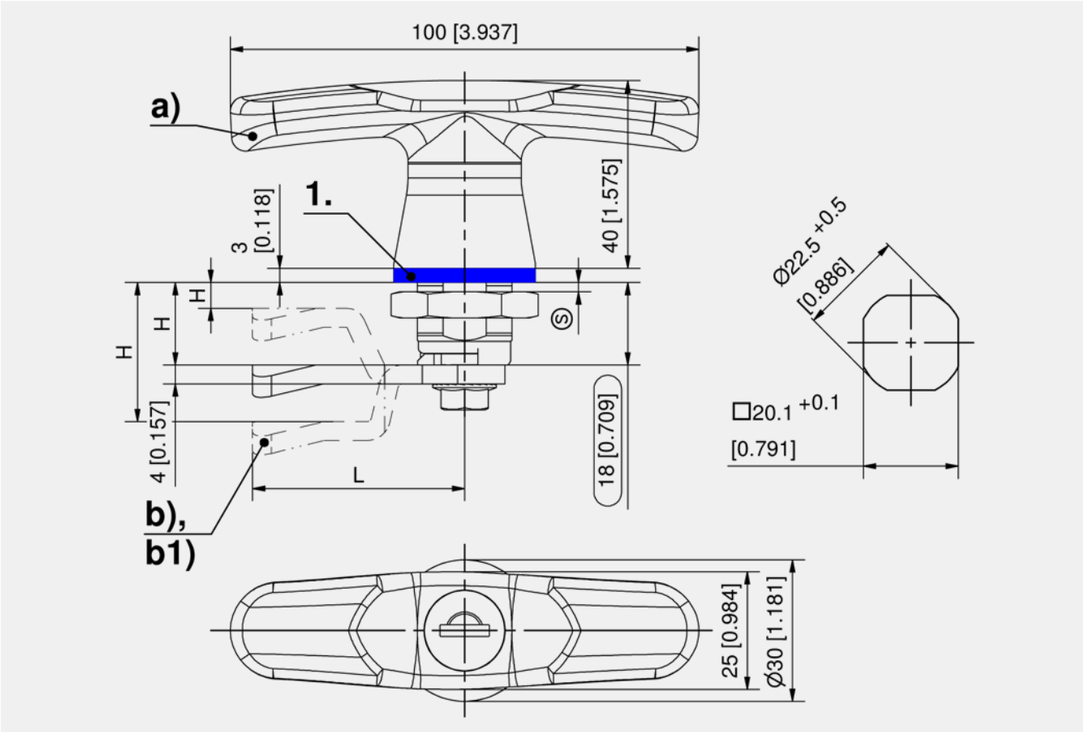

Quarter-Turn with T-handle

	Part Number	Latching type	Installation type	Delivery Unit
a)	100-9313.00-01333	keyed alike DIRAK 1333	screw-on	1 pc.
a)	100-9313.00-99999	keyed different	screw-on	1 pc.

	Accessories
b)	156 7-105 **Cams L35/45 Stainless Steel**
b1)	159 7-105.01 **Cams L35/45 Stainless Steel**

7-081.02

all product details on DIRAK.com

Hygiene Quarter-Turn with T-Handle Pr20.1 L18 Stainless Steel

[7-081.02HD]

Advantages

- Tested according to: GS-NV 2:2013/06 Principles for the testing of food processing machines, GS-NV 6:2013/06 Principles for the testing of hygiene requirements. Machine Ordinance: DIN EN 1672-2:2009.
- DGUV Test Certificate.
- Dirt resistant and easy to clean by means of polished surface and transition radii.
- IP 65/67/69K according to DIN EN 60529 / DIN 40050.
- RH / LH application.
- Grounding by grounding nut.
- Cam can be delivered pre-assembled upon request.
- A pre-assembled quarter-turn can be installed in the cutout.

Materials

- **Housing, handle and grounding nut:** AISI 316
- **Serrated screw:** AISI 304
- **Seal:** silicone, blue, FDA conform (Food and Drug Administration)

Remarks

(S) Door-thickness max. 8mm

Please configure the quarter-turn with a cam.

1. silicone seal

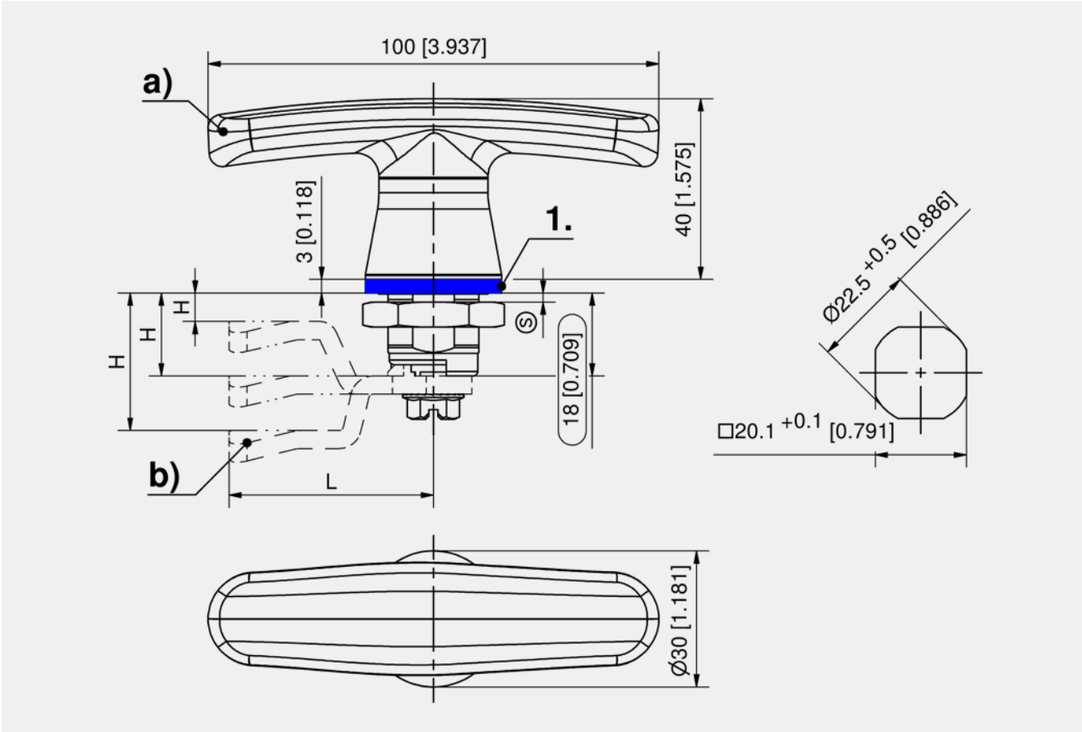

Hygiene Quarter-Turn with T-handle

	Part Number	Housing length	Installation type	Delivery Unit
a)	100-9313.00-00000	18 mm	screw-on	1 pc.

	Accessories
b)	156 7-105 **Cams L35/45 Stainless Steel**

all product details on DIRAK.com

7-081.02HD

Quarter-Turn with L-Handle and Barrel Pr20.1 L18 Stainless Steel

[7-081.03]

Advantages

- Suitable for the food sector and hygienic areas.
- Meets Hygiene requirements acc. to DIN EN ISO 14159 and DIN EN 1672-2.
- Polished surface.
- Seal FDA conform.
- Lockable with cylinder barrel.
- IP 65/67 according to DIN EN 60529.
- RH / LH application.
- Grounding by grounding nut.
- Cam can be delivered pre-assembled upon request.
- The pre-assembled quarter-turn can be installed in the cutout.

Materials

- **Housing, handle and grounding nut:** AISI 316
- **Serrated screw:** AISI 304
- **Seal:** silicone, blue, FDA conform (Food and Drug Administration)

Remarks

(S) Door-thickness max. 8mm

Please configure the quarter-turn with a cam.

1. silicone seal

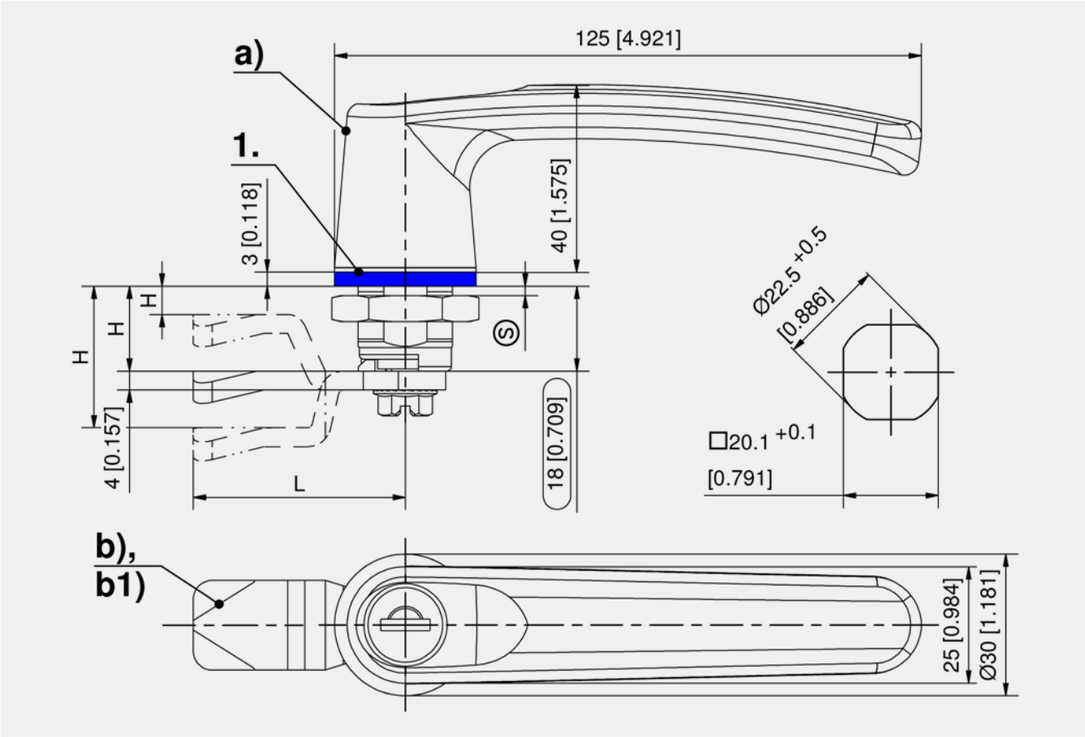

Quarter-Turn with L-handle

	Part Number	Latching type	Installation type	Delivery Unit
a)	100-9416.00-01333	keyed alike DIRAK 1333	screw-on	1 pc.
a)	100-9416.00-99999	keyed different	screw-on	1 pc.

	Accessories
b)	156 7-105 **Cams L35/45 Stainless Steel**
b1)	159 7-105.01 **Cams L35/45 Stainless Steel**

7-081.03

all product details on DIRAK.com

Hygiene Quarter-Turn with L-Handle Pr20.1 L18 Stainless Steel

[7-081.03HD]

Advantages

- Tested according to: GS-NV 2:2013/06 Principles for the testing of food processing machines, GS-NV 6:2013/06 Principles for the testing of hygiene requirements. Machine Ordinance: DIN EN 1672-2:2009.
- DGUV Test Certificate.
- Dirt resistant and easy to clean by means of polished surface and transition radii.
- IP 65/67/69K according to DIN EN 60529 / DIN 40050.
- RH / LH application.
- Cam can be delivered pre-assembled upon request.
- The quarter-turn can be screwed into the cutout with the pre-assembled cam.

Materials

- **Housing, handle and grounding nut:** AISI 316
- **Serrated screw:** AISI 304
- **Seal:** silicone, blue, FDA conform (Food and Drug Administration)

Remarks

(S) Door-thickness max. 8mm

Please configure the quarter-turn with a cam.

1. silicone seal

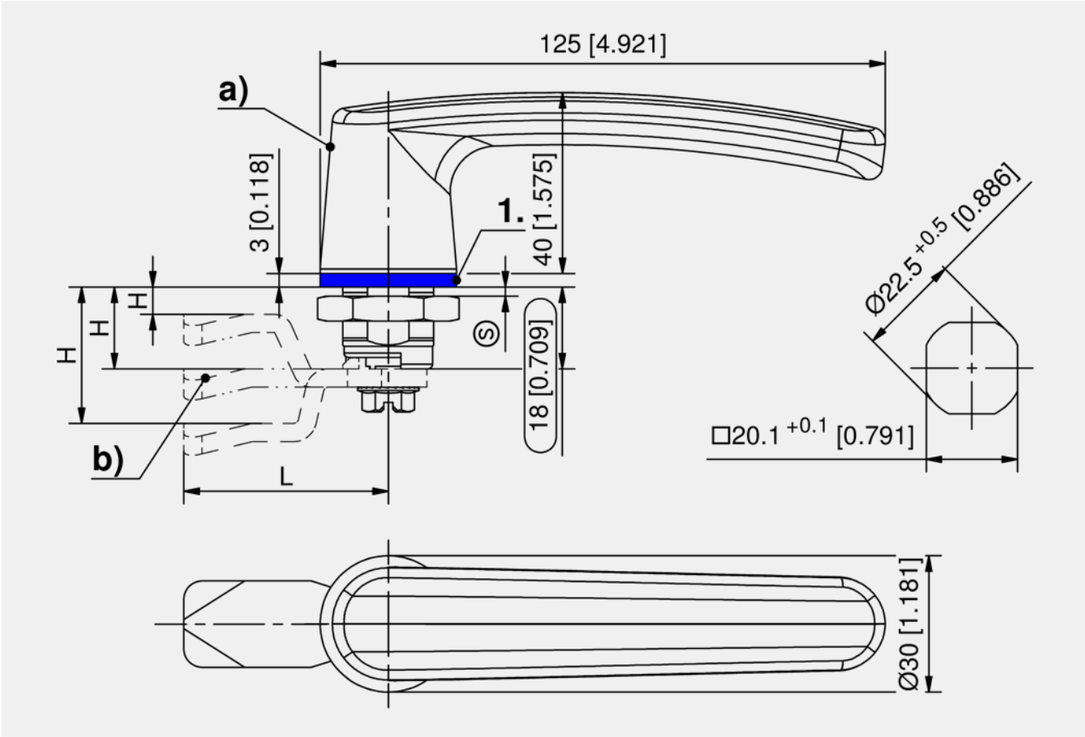

Hygiene Quarter-Turn with L-handle

	Part Number	Grounding type	Installation type	Delivery Unit
a)	100-9416.00-00000	Grounding nut	screw-on	1 pc.

	Accessories
b)	156 7-105 **Cams L35/45 Stainless Steel**

all product details on DIRAK.com

7-081.03HD

Finger Pull and Inserts for Quarter-Turn Pr14.1

[1-059]

14

RoHS WEEE

Advantages

- For head Ø20mm.

Remarks

1. insert
2. spring washer
3. self-locking screw

By using a finger pull the H-dimension changes by 0.8mm.

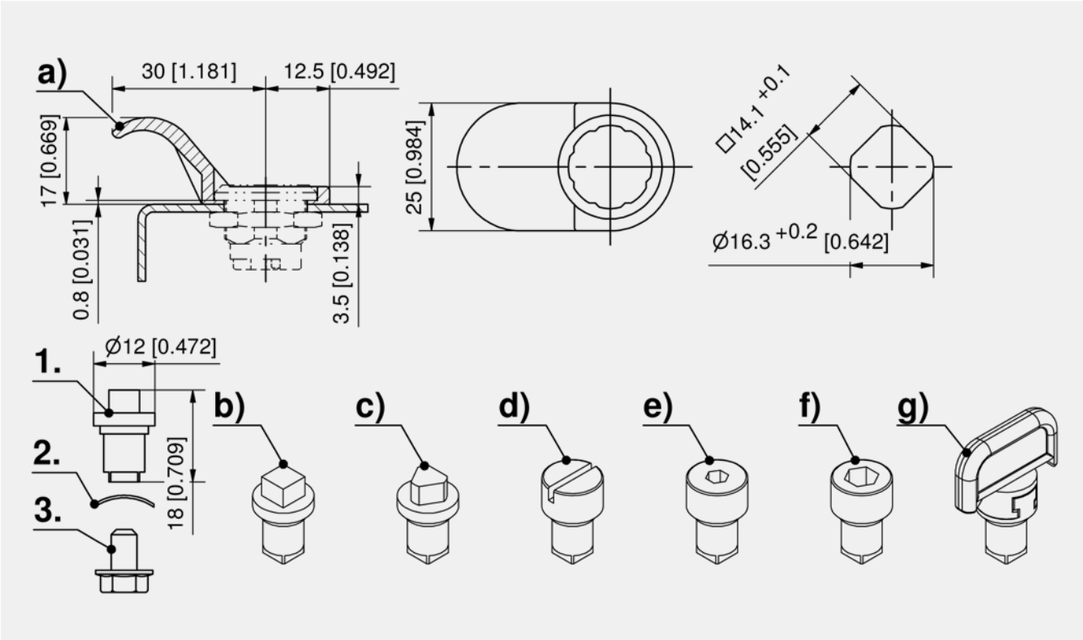

Finger pull and inserts

	Part Number	Name	Material	Surface	Delivery Unit
a)	220-1301.00-00000	Finger pull	PA	black	10 pcs.
b)	220-9102.00-00000	Insert Square 6mm	zinc die	chrome plated	10 pcs.
b)	220-9105.00-00000	Insert Square 6mm	zinc die	black	10 pcs.
c)	220-9101.00-00000	Insert Triangular 6.5mm	zinc die	chrome plated	10 pcs.
c)	220-9104.00-00000	Insert Triangular 6.5mm	zinc die	black	10 pcs.
d)	220-9103.00-00000	Insert Slotted 1.5mm	zinc die	chrome plated	10 pcs.
d)	220-9106.00-00000	Insert Slotted 1.5mm	zinc die	black	10 pcs.
e)	220-9118.00-00000	Insert Socket hex. SW 4mm (5/32")	zinc die	chrome plated	10 pcs.
e)	220-9119.00-00000	Insert Socket hex. SW 4mm (5/32")	zinc die	black	10 pcs.
f)	220-9107.00-00000	Insert Socket hex. SW 6mm	zinc die	chrome plated	10 pcs.
f)	220-9127.00-00000	Insert Socket hex. SW 6mm	PA	black	10 pcs.
g)	220-9117.00-00000	Wing Knob Insert	PA / zinc die core	black	10 pcs.

1-059

◂ all product details on DIRAK.com

Cams for Quarter-Turn Pr14.1

[1-058]

Advantages

- Cams, L- and H-dimension fixed.
- Special cams, L- and H-dimension variable.
- Special cams with star connection, L- and H-dimension variable.

Materials

- **Cams:** steel, zinc plated

Remarks

Please note: cams with star connection only for cylinder quarter-turns.

1. ramp 2mm
2. stop

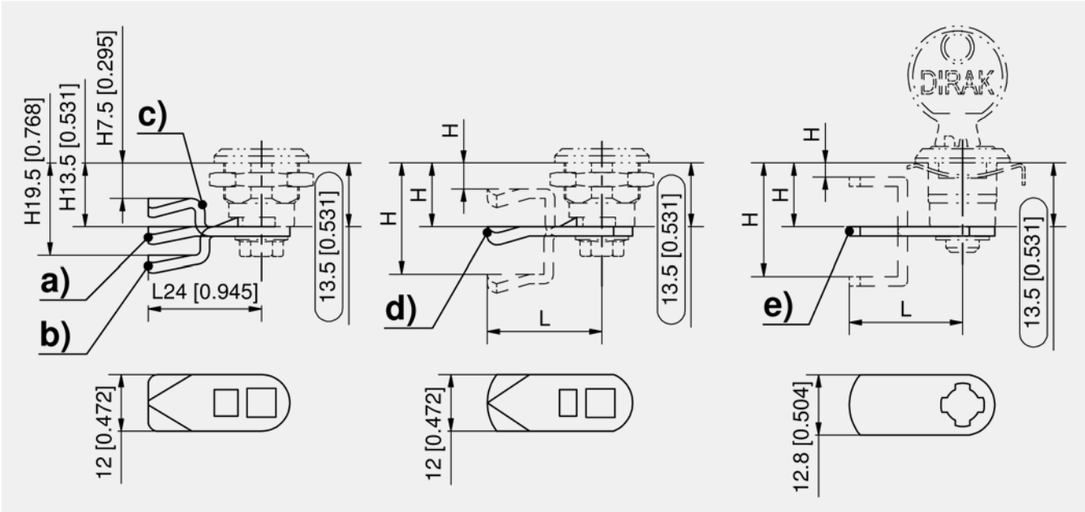

Cam, L-and H-dimension variable

	Part Number	Stop	H-dimension	Length	Delivery Unit
a)	220-0501.00-00000	Yes	13.5 mm	24 mm	10 pcs.
b)	220-0502.00-00000	Yes	19.5 mm	24 mm	10 pcs.
c)	220-0503.00-00000	Yes	7.5 mm	24 mm	10 pcs.
d)	220-10LL.00-Hxxmm	Yes			on request
e)	220-20LL.00-Hxxmm	No			on request

all product details ▸ on DIRAK.com

1-058

Inserts Pr20.1

[1-101]

20

R L

M6
4Nm

RoHS
WEEE

Advantages

- For quarter-turn cutout 20.1

Remarks

1. inserts zinc die, consisting of: insert, spring washer and self locking screw
2. inserts PA, consisting of: insert, spring washer and self-tapping screw

Suitable keys see product-system 6-100 and 6-101.

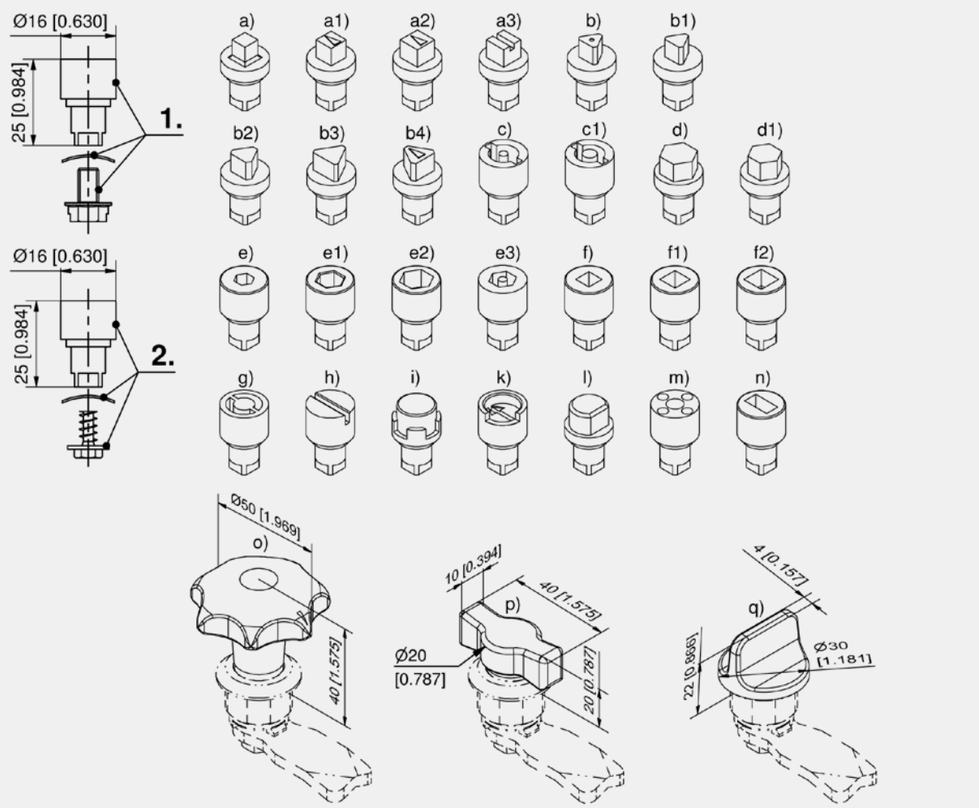

Insert, zinc die, matt chrome plated

	Part Number	Insert	Delivery Unit
a1)	200-9102.40-00000	Square 7mm	10 pcs.
a2)	200-9128.40-00000	Square 8mm	10 pcs.
b2)	200-9105.40-00000	Triangular 8mm	10 pcs.
c)	200-9131.40-00000	Double bit 3mm pin	10 pcs.
c1)	200-9132.40-00000	Double bit 5mm pin	10 pcs.

1-101

all product details
on DIRAK.com

Insert, zinc die, chrome plated glossy

	Part Number	Insert	Indicator	Delivery Unit
a)	200-9101.00-00000	Square 6mm		10 pcs.
a1)	200-9102.00-00000	Square 7mm	Yes	10 pcs.
a2)	200-9103.00-00000	Square 8mm	Yes	10 pcs.
a3)	200-9111.00-00000	Square 8mm, slotted		10 pcs.
b)	200-9106.00-00000	Triangular 6,5mm CNOMO Type 1		10 pcs.
b1)	200-9104.00-00000	Triangular 7mm		10 pcs.
b2)	200-9105.00-00000	Triangular 8mm		10 pcs.
b3)	200-9147.00-00000	Triangular 9mm EDF		10 pcs.
b4)	100-9166.00-00000	Triangular 9mm	Yes	10 pcs.
c)	200-9107.00-00000	Double bit 3mm pin		10 pcs.
c1)	200-9108.00-00000	Double bit 5mm pin		10 pcs.
d)	200-9171.00-00000	Hex. SW 7/16"		10 pcs.
d1)	200-9185.00-00000	Hex. SW10		10 pcs.
e)	200-9142.00-00000	Socket hex. 6mm		10 pcs.
e1)	200-9196.00-00000	Socket hex. SW 8mm		10 pcs.
e2)	200-9112.00-00000	Socket hex. 10mm		10 pcs.
e3)	200-9172.00-00000	Socket hex. 5/16" pin 3mm		10 pcs.
f)	200-9166.00-00000	Square socket 6mm		10 pcs.
f1)	200-9167.00-00000	Square socket 7mm		10 pcs.
f2)	200-9168.00-00000	Square socket 8mm		10 pcs.
g)	200-9109.00-00000	Daimler Benz pin		10 pcs.
h)	200-9113.00-00000	Slotted 2x4mm		10 pcs.
i)	200-9110.00-00000	Crown type		10 pcs.
k)	200-9164.00-00000	Slotted recessed coinproof		10 pcs.
l)	200-9154.00-00000	Half-round czech		10 pcs.
m)	200-9170.00-00000	FIAT		10 pcs.
n)	200-9141.00-00000	GDF 10 x 5mm France		10 pcs.

Insert, zinc die, black

	Part Number	Insert	Indicator	Delivery Unit
a)	200-9127.00-00000	Square 6mm		10 pcs.
a1)	200-9116.00-00000	Square 7mm	Yes	10 pcs.
a2)	200-9128.00-00000	Square 8mm	Yes	10 pcs.
b1)	200-9129.00-00000	Triangular 7mm		10 pcs.
b2)	200-9130.00-00000	Triangular 8mm		10 pcs.
b3)	200-9148.00-00000	Triangular 9mm EDF		10 pcs.
b4)	100-9167.00-00000	Triangular 9mm	Yes	10 pcs.
c)	200-9131.00-00000	Double bit 3mm pin		10 pcs.
c1)	200-9132.00-00000	Double bit 5mm pin		10 pcs.
d)	100-9127.00-00000	Hex. SW 7/16"		10 pcs.
e1)	200-9197.00-00000	Socket hex. SW 8mm		10 pcs.
e3)	200-9178.00-00000	Socket hex. 5/16" pin 3mm		10 pcs.
g)	200-9133.00-00000	Daimler Benz pin		10 pcs.
h)	200-9143.00-00000	Slotted 2x4mm		10 pcs.
k)	200-9169.00-00000	Slotted recessed coinproof		10 pcs.
q)	100-9115.00-00000	Wing knob (only for housings Ø28)		10 pcs.

Insert, PA / zinc die comb. black

	Part Number	Insert	Delivery Unit
c)	200-9117.00-00000	Double bit 3mm pin	10 pcs.
c1)	200-9118.00-00000	Double bit 5mm pin	10 pcs.
h)	200-9126.00-00000	Slotted 2x4mm	10 pcs.
o)	200-9114.00-00000	Star knob	10 pcs.
p)	200-9115.00-00000	Wing knob	10 pcs.

Insert, PA black

	Part Number	Insert	Delivery Unit
a1)	200-9155.00-00000	Square 7mm	10 pcs.
a2)	200-9156.00-00000	Square 8mm	10 pcs.
b2)	200-9158.00-00000	Triangular 8mm	10 pcs.
c)	200-9159.00-00000	Double bit 3mm pin	10 pcs.
c1)	200-9160.00-00000	Double bit 5mm pin	10 pcs.
h)	200-9161.00-00000	Slotted 2x4mm	10 pcs.
k)	200-9186.00-00000	Slotted recessed coinproof	10 pcs.
l)	200-9184.00-00000	Half-round czech	10 pcs.
p)	200-9173.00-00000	Wing knob	10 pcs.

	Accessories
768	6-100 **Wrench**
766	6-101 **Universal key**

Inserts Stainless Steel Pr20.1

[7-082]

20

M6
4Nm

RoHS
WEEE

Advantages

- Insert with screw, wave washer and o-ring.

Materials

- **Inserts:** AISI 316
- **Inserts f)+g):** PA with stainless steel insert

Remarks

1. insert
2. wave washer
3. screw
4. o-ring

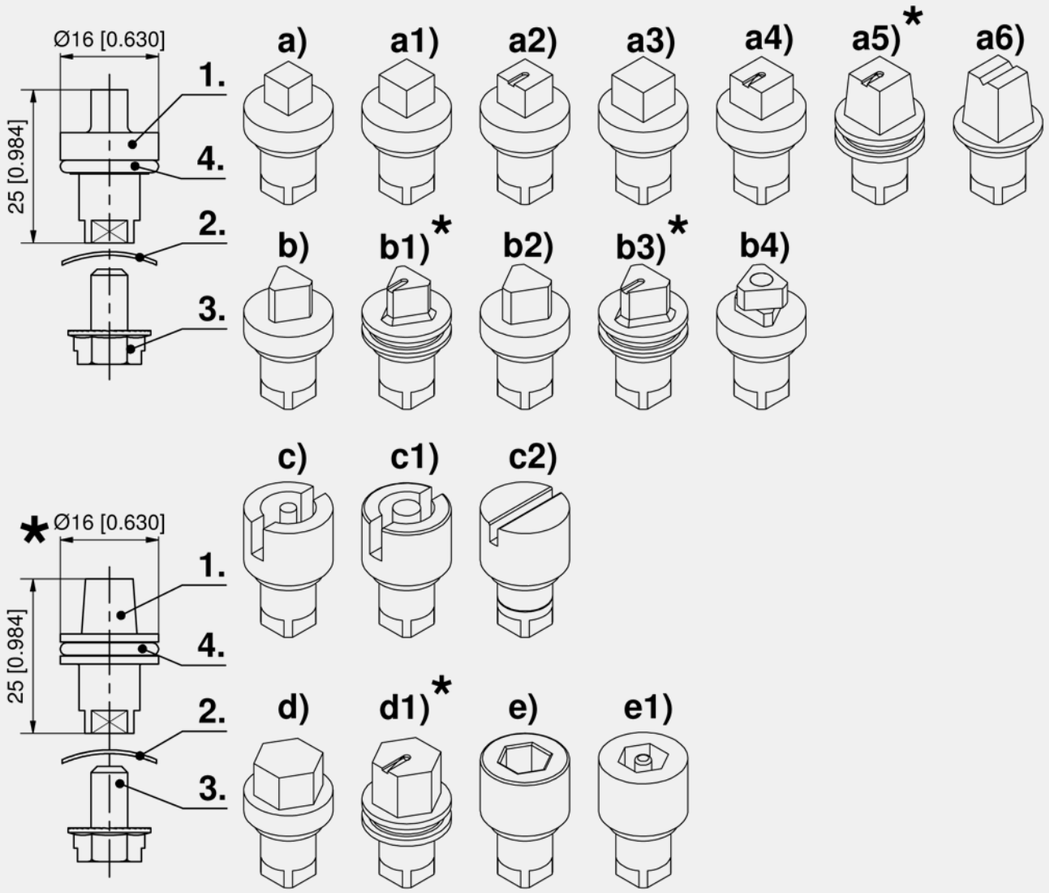

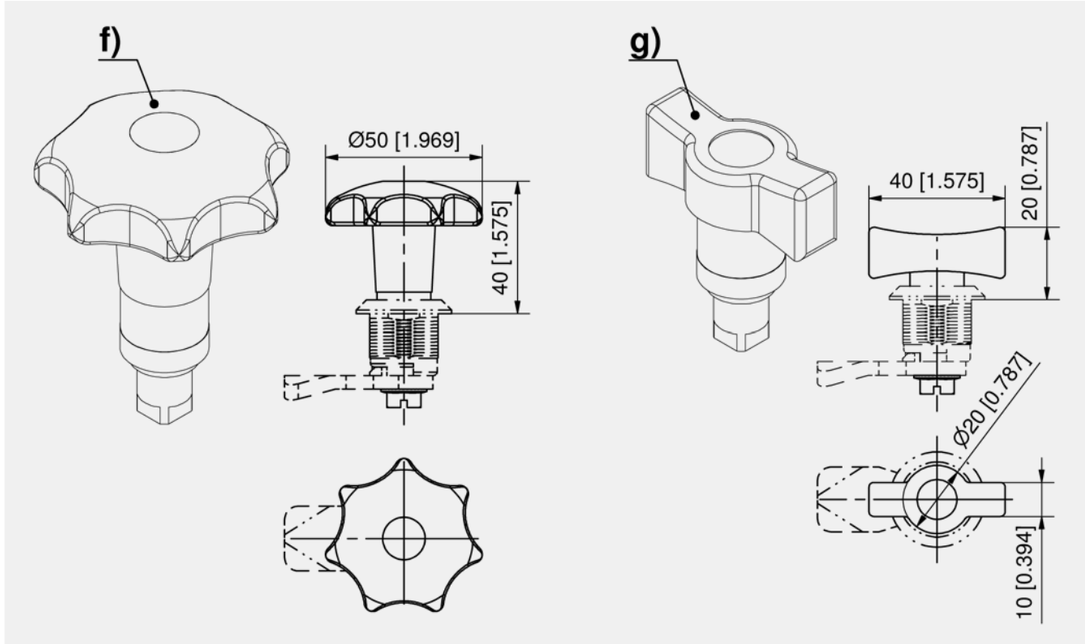

Inserts

	Part Number	Insert	Indicator	Delivery Unit
a)	200-9146.00-00000	Square 6mm		1 pc.
a1)	200-9119.00-00000	Square 7mm		1 pc.
a2)	100-9160.00-00000	Square 7mm	Yes	1 pc.
a3)	200-9120.00-00000	Square 8mm		1 pc.
a4)	100-9161.00-00000	Square 8mm	Yes	1 pc.
a5)	100-9165.00-00000	Conical square 9mm	Yes	1 pc.
a6)	200-9189.00-00000	Conical square 9mm		1 pc.
b)	200-9121.00-00000	Triangular 7mm		1 pc.
b1)	100-9162.00-00000	Triangular 7mm	Yes	1 pc.
b2)	200-9122.00-00000	Triangular 8mm		1 pc.
b3)	100-9163.00-00000	Triangular 8mm	Yes	1 pc.
b4)	100-9168.00-00000	Security insert with free rotating 8mm triangular front part		1 pc.
c)	200-9123.00-00000	Double bit 3mm pin		1 pc.
c1)	200-9124.00-00000	Double bit 5mm pin		1 pc.
c2)	200-9151.00-00000	Slotted 2x4mm		1 pc.
d)	200-9192.00-00000	Hex. 7/16"		1 pc.
d1)	100-9164.00-00000	Hex. SW 11	Yes	1 pc.
e)	200-9195.00-00000	Socket hex. 8mm (5/16")		1 pc.
e1)	100-9118.00-00000	Socket hex. 8mm (5/16")		1 pc.
f)	200-9125.00-00000	Star knob		1 pc.
g)	200-9179.00-00000	Wing knob		1 pc.

7-082

all product details
on DIRAK.com

Cams L35/45 Steel

[1-102]

RoHS
WEEE

Advantages

- Cams with ramp and stop with 35mm and 45mm length for 1-point locking.
- 3-Point cam for 3-point locking.
- Rod control for 2-point locking.

Materials

- **Cams:** steel, zinc plated

Remarks

1. ramp 3mm
2. stroke 18mm at 90° rotation
3. c-clips (are included)

Cams L45 and 3-point cams with marking **e)** are supplied in 2 parts.

Slide shoe for cams 35 and 45mm, see product system 1-103.

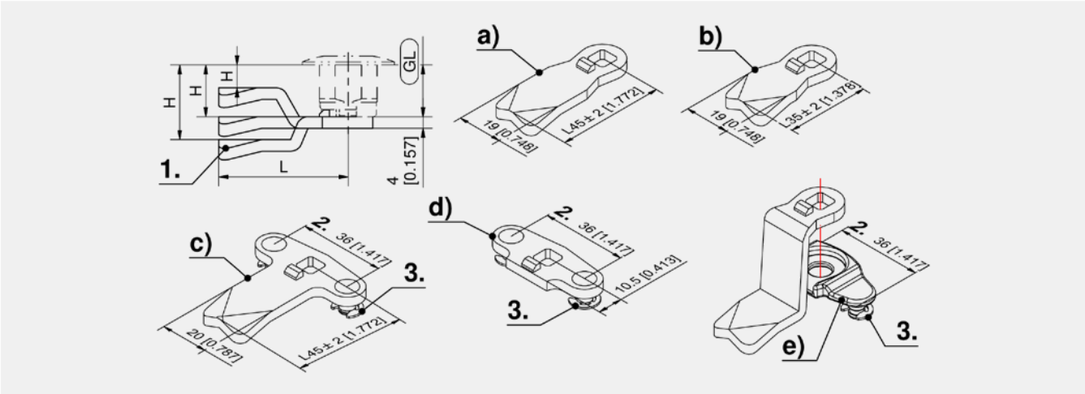

Cams, L45, H-dimensions

	Part Number	Gl12	Gl18	Gl20	Gl22	Gl30	Gl32	Gl36	Gl40	Gl42	Gl46	Gl50	Gl56	Gl60	Gl66	Delivery Unit
a)	200-0402.00-00000		2 mm	4 mm	6 mm	14 mm	16 mm	20 mm	24 mm	26 mm	30 mm	34 mm	40 mm	44 mm	50 mm	10 pcs.
a)	200-0404.00-00000		4 mm	6 mm	8 mm	16 mm	18 mm	22 mm	26 mm	28 mm	32 mm	36 mm	42 mm	46 mm	52 mm	10 pcs.
a)	200-0406.00-00000		6 mm	8 mm	10 mm	18 mm	20 mm	24 mm	28 mm	30 mm	34 mm	38 mm	44 mm	48 mm	54 mm	10 pcs.
a)	200-0408.00-00000		8 mm	10 mm	12 mm	20 mm	22 mm	26 mm	30 mm	32 mm	36 mm	40 mm	46 mm	50 mm	56 mm	10 pcs.
a)	200-0410.00-00000		10 mm	12 mm	14 mm	22 mm	24 mm	28 mm	32 mm	34 mm	38 mm	42 mm	48 mm	52 mm	58 mm	10 pcs.
a)	200-0413.00-00000	7 mm	13 mm	15 mm	17 mm	25 mm	27 mm	31 mm	35 mm	37 mm	41 mm	45 mm	51 mm	55 mm	61 mm	10 pcs.
a)	200-0414.00-00000	8 mm	14 mm	16 mm	18 mm	26 mm	28 mm	32 mm	36 mm	38 mm	42 mm	46 mm	52 mm	56 mm	62 mm	10 pcs.
a)	200-0416.00-00000	10 mm	16 mm	18 mm	20 mm	28 mm	30 mm	34 mm	38 mm	40 mm	44 mm	48 mm	54 mm	58 mm	64 mm	10 pcs.
a)	200-0418.00-00000	12 mm	18 mm	20 mm	22 mm	30 mm	32 mm	36 mm	40 mm	42 mm	46 mm	50 mm	56 mm	60 mm	66 mm	10 pcs.
a)	200-0420.00-00000	14 mm	20 mm	22 mm	24 mm	32 mm	34 mm	38 mm	42 mm	44 mm	48 mm	52 mm	58 mm	62 mm	68 mm	10 pcs.
a)	200-0422.00-00000	16 mm	22 mm	24 mm	26 mm	34 mm	36 mm	40 mm	44 mm	46 mm	50 mm	54 mm	60 mm	64 mm	70 mm	10 pcs.
a)	200-0424.00-00000	18 mm	24 mm	26 mm	28 mm	36 mm	38 mm	42 mm	46 mm	48 mm	52 mm	56 mm	62 mm	66 mm	72 mm	10 pcs.
a)	200-0425.00-00000	19 mm	25 mm	27 mm	29 mm	37 mm	39 mm	43 mm	47 mm	49 mm	53 mm	57 mm	63 mm	67 mm	73 mm	10 pcs.
a)	200-0426.00-00000	20 mm	26 mm	28 mm	30 mm	38 mm	40 mm	44 mm	48 mm	50 mm	54 mm	58 mm	64 mm	68 mm	74 mm	10 pcs.
a)	200-0428.00-00000	22 mm	28 mm	30 mm	32 mm	40 mm	42 mm	46 mm	50 mm	52 mm	56 mm	60 mm	66 mm	70 mm	76 mm	10 pcs.
a)	200-0430.00-00000	24 mm	30 mm	32 mm	34 mm	42 mm	44 mm	48 mm	52 mm	54 mm	58 mm	62 mm	68 mm	72 mm	78 mm	10 pcs.
a)	200-0432.00-00000	26 mm	32 mm	34 mm	36 mm	44 mm	46 mm	50 mm	54 mm	56 mm	60 mm	64 mm	70 mm	74 mm	80 mm	10 pcs.
a)	200-0434.00-00000	28 mm	34 mm	36 mm	38 mm	46 mm	48 mm	52 mm	56 mm	58 mm	62 mm	66 mm	72 mm	76 mm	82 mm	10 pcs.
a)	200-0435.00-00000	29 mm	35 mm	37 mm	39 mm	47 mm	49 mm	53 mm	57 mm	59 mm	63 mm	67 mm	73 mm	77 mm	83 mm	10 pcs.
a)	200-0436.00-00000	30 mm	36 mm	38 mm	40 mm	48 mm	50 mm	54 mm	58 mm	60 mm	64 mm	68 mm	74 mm	78 mm	84 mm	10 pcs.
a)	200-0438.00-00000	32 mm	38 mm	40 mm	42 mm	50 mm	52 mm	56 mm	60 mm	62 mm	66 mm	70 mm	76 mm	80 mm	86 mm	10 pcs.
a)	200-0440.00-00000	34 mm	40 mm	42 mm	44 mm	52 mm	54 mm	58 mm	62 mm	64 mm	68 mm	72 mm	78 mm	82 mm	88 mm	10 pcs.
a)	200-0442.00-00000	36 mm	42 mm	44 mm	46 mm	54 mm	56 mm	60 mm	64 mm	66 mm	70 mm	74 mm	80 mm	84 mm	90 mm	10 pcs.
a)	200-0444.00-00000	38 mm	44 mm	46 mm	48 mm	56 mm	58 mm	62 mm	66 mm	68 mm	72 mm	76 mm	82 mm	86 mm	92 mm	10 pcs.
e)	200-0445.00-00000	39 mm	45 mm	47 mm	49 mm	57 mm	59 mm	63 mm	67 mm	69 mm	73 mm	77 mm	83 mm	87 mm	93 mm	10 pcs.
e)	200-0447.00-00000	41 mm	47 mm	49 mm	51 mm	59 mm	61 mm	65 mm	69 mm	71 mm	75 mm	79 mm	85 mm	89 mm	95 mm	10 pcs.
e)	200-0450.00-00000	44 mm	50 mm	52 mm	54 mm	62 mm	64 mm	68 mm	72 mm	74 mm	78 mm	82 mm	88 mm	92 mm	98 mm	10 pcs.
a)	200-0453.00-00000	47 mm	53 mm	55 mm	57 mm	65 mm	67 mm	71 mm	75 mm	77 mm	81 mm	85 mm	91 mm	95 mm	101 mm	10 pcs.
a)	200-0455.00-00000	49 mm	55 mm	57 mm	59 mm	67 mm	69 mm	73 mm	77 mm	79 mm	83 mm	87 mm	93 mm	97 mm	103 mm	10 pcs.

1-102

all product details
on DIRAK.com

Cams, L35, H-dimensions

	Part Number	Gl12	Gl18	Gl20	Gl22	Gl30	Gl32	Gl36	Gl40	Gl42	Gl46	Gl50	Gl56	Gl60	Gl66	Delivery Unit
b)	200-0606.00-00000		6 mm	8 mm	10 mm	18 mm	20 mm	24 mm	28 mm	30 mm	34 mm	38 mm	44 mm	48 mm	54 mm	10 pcs.
b)	200-0608.00-00000		8 mm	10 mm	12 mm	20 mm	22 mm	26 mm	30 mm	32 mm	36 mm	40 mm	46 mm	50 mm	56 mm	10 pcs.
b)	200-0610.00-00000		10 mm	12 mm	14 mm	22 mm	24 mm	28 mm	32 mm	34 mm	38 mm	42 mm	48 mm	52 mm	58 mm	10 pcs.
b)	200-0613.00-00000	7 mm	13 mm	15 mm	17 mm	25 mm	27 mm	31 mm	35 mm	37 mm	41 mm	45 mm	51 mm	55 mm	61 mm	10 pcs.
b)	200-0614.00-00000	8 mm	14 mm	16 mm	18 mm	26 mm	28 mm	32 mm	36 mm	38 mm	42 mm	46 mm	52 mm	56 mm	62 mm	10 pcs.
b)	200-0616.00-00000	10 mm	16 mm	18 mm	20 mm	28 mm	30 mm	34 mm	38 mm	40 mm	44 mm	48 mm	54 mm	58 mm	64 mm	10 pcs.
b)	200-0618.00-00000	12 mm	18 mm	20 mm	22 mm	30 mm	32 mm	36 mm	40 mm	42 mm	46 mm	50 mm	56 mm	60 mm	66 mm	10 pcs.
b)	200-0620.00-00000	14 mm	20 mm	22 mm	24 mm	32 mm	34 mm	38 mm	42 mm	44 mm	48 mm	52 mm	58 mm	62 mm	68 mm	10 pcs.
b)	200-0622.00-00000	16 mm	22 mm	24 mm	26 mm	34 mm	36 mm	40 mm	44 mm	46 mm	50 mm	54 mm	60 mm	64 mm	70 mm	10 pcs.
b)	200-0624.00-00000	18 mm	24 mm	26 mm	28 mm	36 mm	38 mm	42 mm	46 mm	48 mm	52 mm	56 mm	62 mm	66 mm	72 mm	10 pcs.
b)	200-0625.00-00000	19 mm	25 mm	27 mm	29 mm	37 mm	39 mm	43 mm	47 mm	49 mm	53 mm	57 mm	63 mm	67 mm	73 mm	10 pcs.
b)	200-0626.00-00000	20 mm	26 mm	28 mm	30 mm	38 mm	40 mm	44 mm	48 mm	50 mm	54 mm	58 mm	64 mm	68 mm	74 mm	10 pcs.
a)	200-0628.00-00000	22 mm	28 mm	30 mm	32 mm	40 mm	42 mm	46 mm	50 mm	52 mm	56 mm	60 mm	66 mm	70 mm	76 mm	10 pcs.
b)	200-0630.00-00000	24 mm	30 mm	32 mm	34 mm	42 mm	44 mm	48 mm	52 mm	54 mm	58 mm	62 mm	68 mm	72 mm	78 mm	10 pcs.
b)	200-0635.00-00000	29 mm	35 mm	37 mm	39 mm	47 mm	49 mm	53 mm	57 mm	59 mm	63 mm	67 mm	73 mm	77 mm	83 mm	10 pcs.
a)	200-0638.00-00000	32 mm	38 mm	40 mm	42 mm	50 mm	52 mm	56 mm	60 mm	62 mm	66 mm	70 mm	76 mm	80 mm	86 mm	10 pcs.
b)	200-0640.00-00000	34 mm	40 mm	42 mm	44 mm	52 mm	54 mm	58 mm	62 mm	64 mm	68 mm	72 mm	78 mm	82 mm	88 mm	10 pcs.
b)	200-0642.00-00000	36 mm	42 mm	44 mm	46 mm	54 mm	56 mm	60 mm	64 mm	66 mm	70 mm	74 mm	80 mm	84 mm	90 mm	10 pcs.
b)	200-0644.00-00000	38 mm	44 mm	46 mm	48 mm	56 mm	58 mm	62 mm	66 mm	68 mm	72 mm	76 mm	82 mm	86 mm	92 mm	10 pcs.

3-point cams, H-dimensions

	Part Number	Gl12	Gl18	Gl20	Gl22	Gl30	Gl32	Gl36	Gl40	Gl42	Gl46	Gl50	Gl56	Gl60	Gl66	Delivery Unit
c)	200-9504.00-00000		4 mm	6 mm	8 mm	16 mm	18 mm	22 mm	26 mm	28 mm	32 mm	36 mm	42 mm	46 mm	52 mm	1 pc.
c)	200-9506.00-00000		6 mm	8 mm	10 mm	18 mm	20 mm	24 mm	28 mm	30 mm	34 mm	38 mm	44 mm	48 mm	54 mm	1 pc.
c)	200-9508.00-00000		8 mm	10 mm	12 mm	20 mm	22 mm	26 mm	30 mm	32 mm	36 mm	40 mm	46 mm	50 mm	56 mm	1 pc.
c)	200-9510.00-00000		10 mm	12 mm	14 mm	22 mm	24 mm	28 mm	32 mm	34 mm	38 mm	42 mm	48 mm	52 mm	58 mm	1 pc.
c)	200-9513.00-00000	7 mm	13 mm	15 mm	17 mm	25 mm	27 mm	31 mm	35 mm	37 mm	41 mm	45 mm	51 mm	55 mm	61 mm	1 pc.
c)	200-9514.00-00000	8 mm	14 mm	16 mm	18 mm	26 mm	28 mm	32 mm	36 mm	38 mm	42 mm	46 mm	52 mm	56 mm	62 mm	1 pc.
c)	200-9516.00-00000	10 mm	16 mm	18 mm	20 mm	28 mm	30 mm	34 mm	38 mm	40 mm	44 mm	48 mm	54 mm	58 mm	64 mm	1 pc.
c)	200-9518.00-00000	12 mm	18 mm	20 mm	22 mm	30 mm	32 mm	36 mm	40 mm	42 mm	46 mm	50 mm	56 mm	60 mm	66 mm	1 pc.
c)	200-9520.00-00000	14 mm	20 mm	22 mm	24 mm	32 mm	34 mm	38 mm	42 mm	44 mm	48 mm	52 mm	58 mm	62 mm	68 mm	1 pc.
c)	200-9522.00-00000	16 mm	22 mm	24 mm	26 mm	34 mm	36 mm	40 mm	44 mm	46 mm	50 mm	54 mm	60 mm	64 mm	70 mm	1 pc.
c)	200-9524.00-00000	18 mm	24 mm	26 mm	28 mm	36 mm	38 mm	42 mm	46 mm	48 mm	52 mm	56 mm	62 mm	66 mm	72 mm	1 pc.
c)	200-9525.00-00000	19 mm	25 mm	27 mm	29 mm	37 mm	39 mm	43 mm	47 mm	49 mm	53 mm	57 mm	63 mm	67 mm	73 mm	1 pc.
b)	200-9526.00-00000	20 mm	26 mm	28 mm	30 mm	38 mm	40 mm	44 mm	48 mm	50 mm	54 mm	58 mm	64 mm	68 mm	74 mm	1 pc.
c)	200-9528.00-00000	22 mm	28 mm	30 mm	32 mm	40 mm	42 mm	46 mm	50 mm	52 mm	56 mm	60 mm	66 mm	70 mm	76 mm	1 pc.
c)	200-9530.00-00000	24 mm	30 mm	32 mm	34 mm	42 mm	44 mm	48 mm	52 mm	54 mm	58 mm	62 mm	68 mm	72 mm	78 mm	1 pc.
c)	200-9532.00-00000	26 mm	32 mm	34 mm	36 mm	44 mm	46 mm	50 mm	54 mm	56 mm	60 mm	64 mm	70 mm	74 mm	80 mm	1 pc.
c)	200-9534.00-00000	28 mm	34 mm	36 mm	38 mm	46 mm	48 mm	52 mm	56 mm	58 mm	62 mm	66 mm	72 mm	76 mm	82 mm	1 pc.
c)	200-9535.00-00000	29 mm	35 mm	37 mm	39 mm	47 mm	49 mm	53 mm	57 mm	59 mm	63 mm	67 mm	73 mm	77 mm	83 mm	1 pc.
c)	200-9536.00-00000	30 mm	36 mm	38 mm	40 mm	48 mm	50 mm	54 mm	58 mm	60 mm	64 mm	68 mm	74 mm	78 mm	84 mm	1 pc.
c)	200-9538.00-00000	32 mm	38 mm	40 mm	42 mm	50 mm	52 mm	56 mm	60 mm	62 mm	66 mm	70 mm	76 mm	80 mm	86 mm	1 pc.
c)	200-9540.00-00000	34 mm	40 mm	42 mm	44 mm	52 mm	54 mm	58 mm	62 mm	64 mm	68 mm	72 mm	78 mm	82 mm	88 mm	1 pc.
c)	200-9542.00-00000	36 mm	42 mm	44 mm	46 mm	54 mm	56 mm	60 mm	64 mm	66 mm	70 mm	74 mm	80 mm	84 mm	90 mm	1 pc.
c)	200-9544.00-00000	38 mm	44 mm	46 mm	48 mm	56 mm	58 mm	62 mm	66 mm	68 mm	72 mm	76 mm	82 mm	86 mm	92 mm	1 pc.
e)	200-9545.00-00000	39 mm	45 mm	47 mm	49 mm	57 mm	59 mm	63 mm	67 mm	69 mm	73 mm	77 mm	83 mm	87 mm	93 mm	1 pc.
e)	200-9547.00-00000	41 mm	47 mm	49 mm	51 mm	59 mm	61 mm	65 mm	69 mm	71 mm	75 mm	79 mm	85 mm	89 mm	95 mm	1 pc.
e)	200-9550.00-00000	44 mm	50 mm	52 mm	54 mm	62 mm	64 mm	68 mm	72 mm	74 mm	78 mm	82 mm	88 mm	92 mm	98 mm	1 pc.

Rod control

	Part Number	Stop	Installation type	Delivery Unit
d)	200-9599.00-00000	Yes	screw-on	1 pc.

Accessories	
157	1-103 **Slide Shoe for Cams**
160	1-260 **Hooked Cam**
161	1-261 **Cams with Ramp**
161	1-262 **Cams variable**
294	2-150 **3-Point Cam L45, Rod Control**
175, 295	2-151 **2-, 3- and 4-Point Cam Adapter**
178, 298	2-151.01 **3-Point Adapter with Adjustment**
176, 296	2-151.04 **3-Point Cam Adapter**

Cams L35/45 Stainless Steel

[7-105]

Advantages

- Cams with ramp and stop with 35mm and 45mm length for 1-point locking.
- 3-point cam for 3-point locking.
- 2-point cam as rod control for 2-point locking.

Materials

- **Cams:** AISI 304

Remarks

Slide shoe for cams 35 and 45mm, see product system 1-103

1. ramp 3mm
2. stroke 18mm
3. stubs for c-clips included

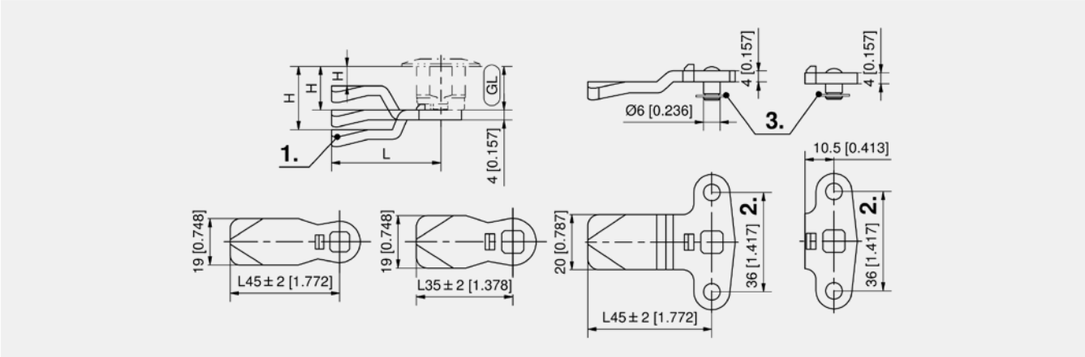

Cams, L45

Part Number	H-dimension GI18	H-dimension GI30	H-dimension GI36	H-dimension GI40	H-dimension GI50	H-dimension GI60	Delivery Unit
200-0506.00-00000	6 mm	18 mm	24 mm	28 mm	38 mm	48 mm	1 pc.
200-0508.00-00000	8 mm	20 mm	26 mm	30 mm	40 mm	50 mm	1 pc.
200-0510.00-00000	10 mm	22 mm	28 mm	32 mm	42 mm	52 mm	1 pc.
200-0514.00-00000	14 mm	26 mm	32 mm	36 mm	46 mm	56 mm	1 pc.
200-0516.00-00000	16 mm	28 mm	34 mm	38 mm	48 mm	58 mm	1 pc.
200-0518.00-00000	18 mm	30 mm	36 mm	40 mm	50 mm	60 mm	1 pc.
200-0520.00-00000	20 mm	32 mm	38 mm	42 mm	52 mm	62 mm	1 pc.
200-0522.00-00000	22 mm	34 mm	40 mm	44 mm	54 mm	64 mm	1 pc.
200-0524.00-00000	24 mm	36 mm	42 mm	46 mm	56 mm	66 mm	1 pc.
200-0526.00-00000	26 mm	38 mm	44 mm	48 mm	58 mm	68 mm	1 pc.
200-0528.00-00000	28 mm	40 mm	46 mm	50 mm	60 mm	70 mm	1 pc.
200-0532.00-00000	32 mm	44 mm	50 mm	54 mm	64 mm	74 mm	1 pc.
200-0540.00-00000	40 mm	52 mm	58 mm	62 mm	72 mm	82 mm	1 pc.
200-0542.00-00000	42 mm	54 mm	60 mm	64 mm	74 mm	84 mm	1 pc.
200-0550.00-00000	50 mm	62 mm	68 mm	72 mm	82 mm	92 mm	1 pc.

Cams, L35

Part Number	H-dimension GI18	H-dimension GI30	H-dimension GI36	H-dimension GI40	H-dimension GI50	H-dimension GI60	Delivery Unit
200-4535.00-00018	18 mm	30 mm	36 mm	40 mm	50 mm	60 mm	1 pc.
200-4535.00-00020	20 mm	32 mm	38 mm	42 mm	52 mm	62 mm	1 pc.
200-4535.00-00022	22 mm	34 mm	40 mm	44 mm	54 mm	64 mm	1 pc.

3-point cams

Part Number	Version	Delivery Unit
200-9845.00-00022	Bending A20	1 pc.
200-9845.00-00028	Bending A26	1 pc.

2-point cam

Part Number	Delivery Unit
200-9899.00-00000	1 pc.

7-105
◂ all product details on DIRAK.com

Slide Shoe for Cams

[1-103]

Advantages

- 2 parts.
- Tool-less assembly.
- Matching cams as of 35 mm, product system 1-102 and 7-105.
- No abrasion of the metal and therefore safety concerning electronic built-in components.
- Good gliding properties, therefore low friction coefficient.
- The assembly will be carried out with the already installed quarter-turn, it is possible to retrofit at any time.
- Vibration-proof according to DIN EN 61373.

Materials

- **Slide shoe:** POM, natural

Remarks

The slide shoe **cannot** be used with the following cams: 200-0606, 200-0608, 200-0610, 200-0613, 200-0614, 200-0402, 200-0404, 200-0406, 200-0408, 200-0410, 200-0506, 200-0508 and 200-0510 and **not** for 3-point cams of product system 2-150, 1-102 and 7-105.

1. ramp 3mm
2. place latch under the cam.
3. slide housing onto the cam and the latch.
4. latch must lock audibly into the window.

Note: the H-dimension diminishes by 2mm.

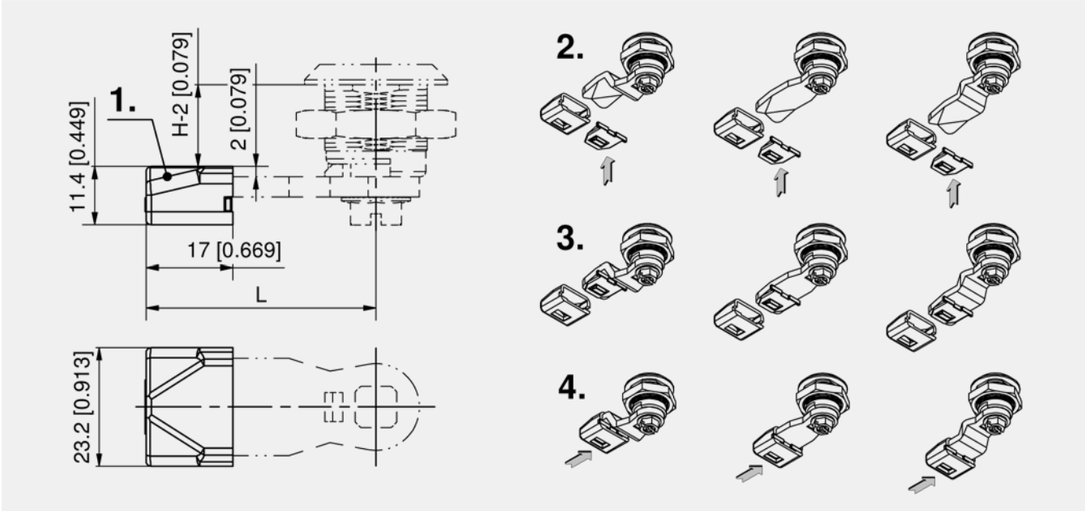

Slide shoe

Part Number	Delivery Unit
200-9622.00-00000	10 pcs.

all product details ▸ on DIRAK.com
1-103

Cams L45 Steel

[1-102.01]

RoHS WEEE

Advantages

- Cams without ramp and stop.
- **a)** = straight cam (XX)
- **(XX)** = housing length, measured from the upper edge of the panel to the upper edge of the cam.
- **b)** = negatively bent cam (upwards).
- **c)** = positively bent cam (downwards).

Materials

- **Cams:** steel, zinc plated

Remarks

Attention: please note that a collision with the fixing nut of negatively bent cams installed in thick doors might be possible. The functionality has to be checked in the individual case.

Formula for H-dimension:

for negatively bent cams K will be substracted from (XX), for positively bent cams K will be added to (XX).

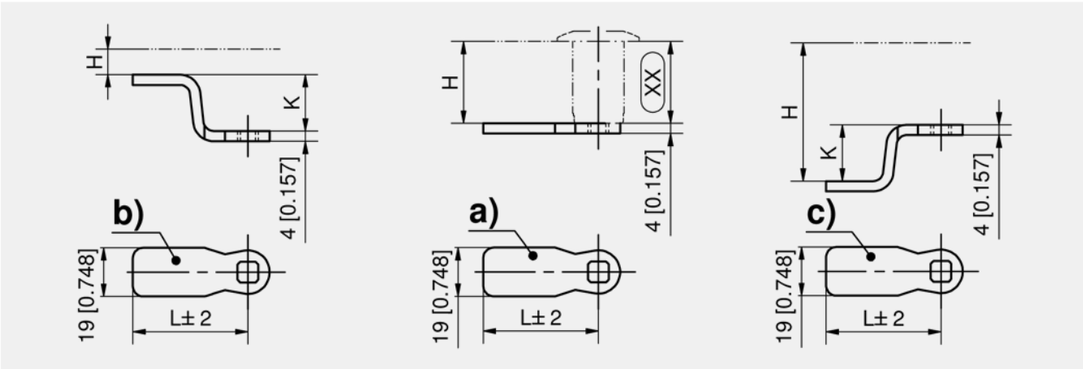

Cams, length 45mm, without stop

	Part Number	b) negatively bent K =	c) positively bent K =	Delivery Unit
	100-0545.15-00022	22 mm	22 mm	1 pc.
	100-0545.15-00020	20 mm	20 mm	1 pc.
	100-0545.15-00018	18 mm	18 mm	1 pc.
	100-0545.15-00016	16 mm	16 mm	1 pc.
	100-0545.15-00014	14 mm	14 mm	1 pc.
	100-0545.15-00012	12 mm	12 mm	1 pc.
	100-0545.15-00010	10 mm	10 mm	1 pc.
	100-0545.15-00008	8 mm	8 mm	1 pc.
	100-0545.15-00006	6 mm	6 mm	1 pc.
	100-0545.15-00004	4 mm	4 mm	1 pc.
	100-0545.15-00002	2 mm	2 mm	1 pc.
a)	100-0545.15-00000	00 mm	00 mm	1 pc.

1-102.01
◂ all product details on DIRAK.com

Cams L35/45 Stainless Steel

[7-105.01]

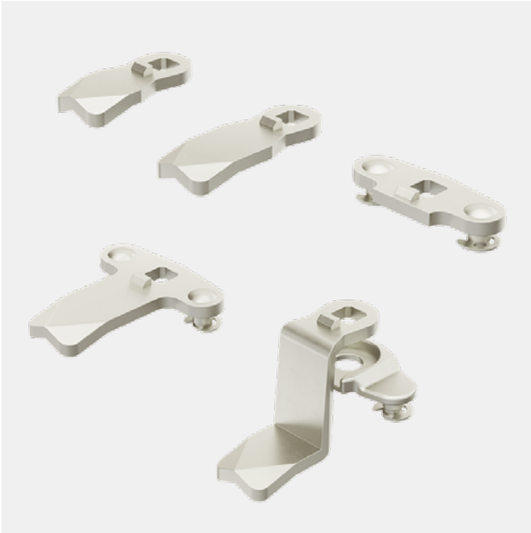

Advantages

- Cams without ramp and stop.
- **a), a1)** = straight cam (XX)
- (XX) = housing length, measured from the upper edge of the panel to the upper edge of the cam.
- **b), b1)** = negatively bent cam (upwards)
- **c), c1)** = positively bent cam (downwards)

Materials

- **Cams:** AISI 304

Remarks

Attention: please note that a collision with the fixing nut of negatively bent cams installed in thick doors might be possible. The functionality has to be checked in the individual case.

Formula for H-dimension:

for negatively bent cams K will be substracted from (XX), for positively bent cams K will be added to (XX)

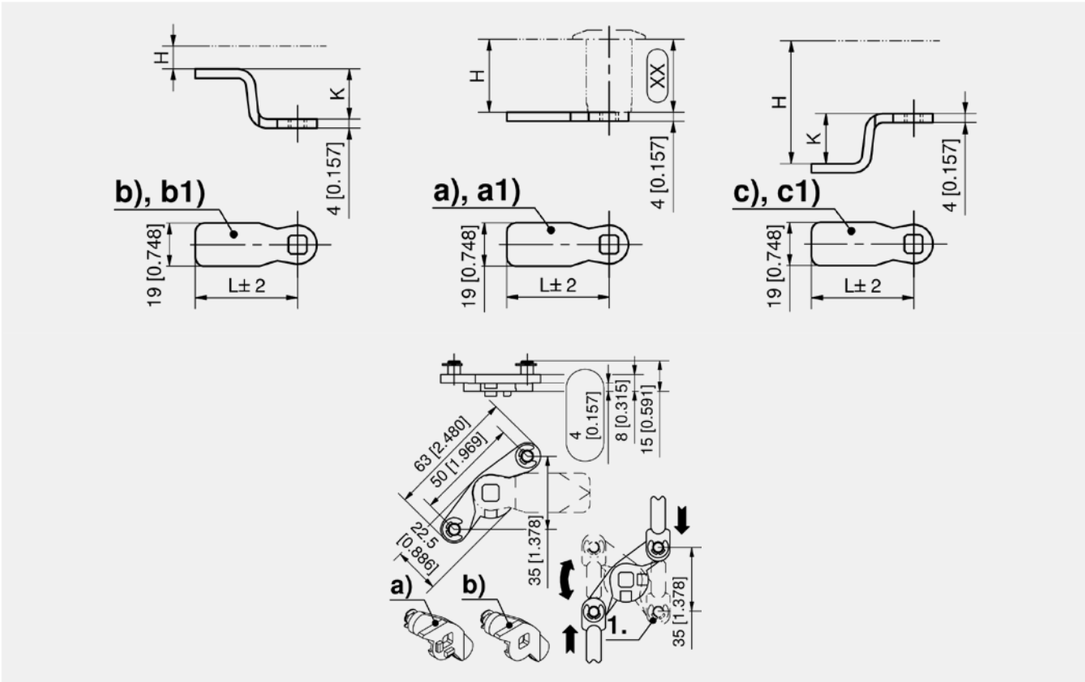

Cams, length 35mm, without stop

	Part Number	b) negatively bent K =	c) positively bent K =	Delivery Unit
	100-0535.80-00022	22 mm	22 mm	1 pc.
	100-0535.80-00020	20 mm	20 mm	1 pc.
	100-0535.80-00018	18 mm	18 mm	1 pc.
	100-0535.80-00016	16 mm	16 mm	1 pc.
	100-0535.80-00014	14 mm	14 mm	1 pc.
	100-0535.80-00012	12 mm	12 mm	1 pc.
	100-0535.80-00010	10 mm	10 mm	1 pc.
	100-0535.80-00008	8 mm	8 mm	1 pc.
	100-0535.80-00006	6 mm	6 mm	1 pc.
	100-0535.80-00004	4 mm	4 mm	1 pc.
	100-0535.80-00002	2 mm	2 mm	1 pc.
a)	100-0535.80-00000	00 mm	00 mm	1 pc.

Cams, length 45mm, without stop

	Part Number	b) negatively bent K =	c) positively bent K =	Delivery Unit
	100-0545.80-00022	22 mm	22 mm	1 pc.
	100-0545.80-00020	20 mm	20 mm	1 pc.
	100-0545.80-00018	18 mm	18 mm	1 pc.
	100-0545.80-00016	16 mm	16 mm	1 pc.
	100-0545.80-00014	14 mm	14 mm	1 pc.
	100-0545.80-00012	12 mm	12 mm	1 pc.
	100-0545.80-00010	10 mm	10 mm	1 pc.
	100-0545.80-00008	8 mm	8 mm	1 pc.
	100-0545.80-00006	6 mm	6 mm	1 pc.
	100-0545.80-00004	4 mm	4 mm	1 pc.
	100-0545.80-00002	2 mm	2 mm	1 pc.
a1)	100-0545.80-00000	00 mm	00 mm	1 pc.

all product details ▸ on DIRAK.com
7-105.01

Quarter-Turns Accessories

Hooked Cams

[1-260]

RoHS
WEEE

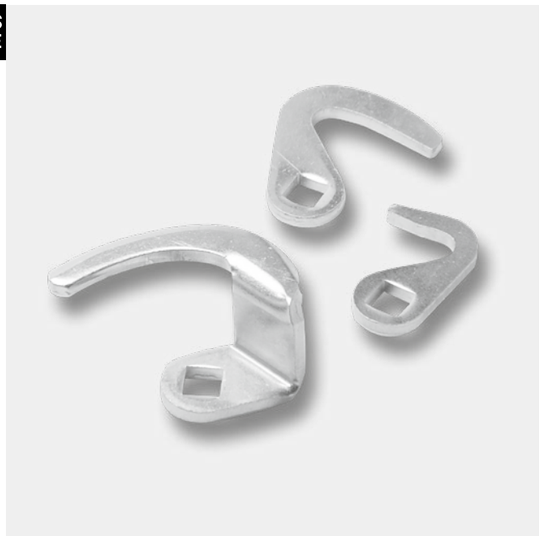

Advantages

- Hooked cams suitable for all 200-series latches and handles.

Materials

- **Hooked cam:** steel, zinc plated

Remarks

1. stop

Please note: when assembling 200-1701 or 200-1703 by DIRAK, please indicate the locking direction of the cam.

Cam 200-1702 only clockwise operation.

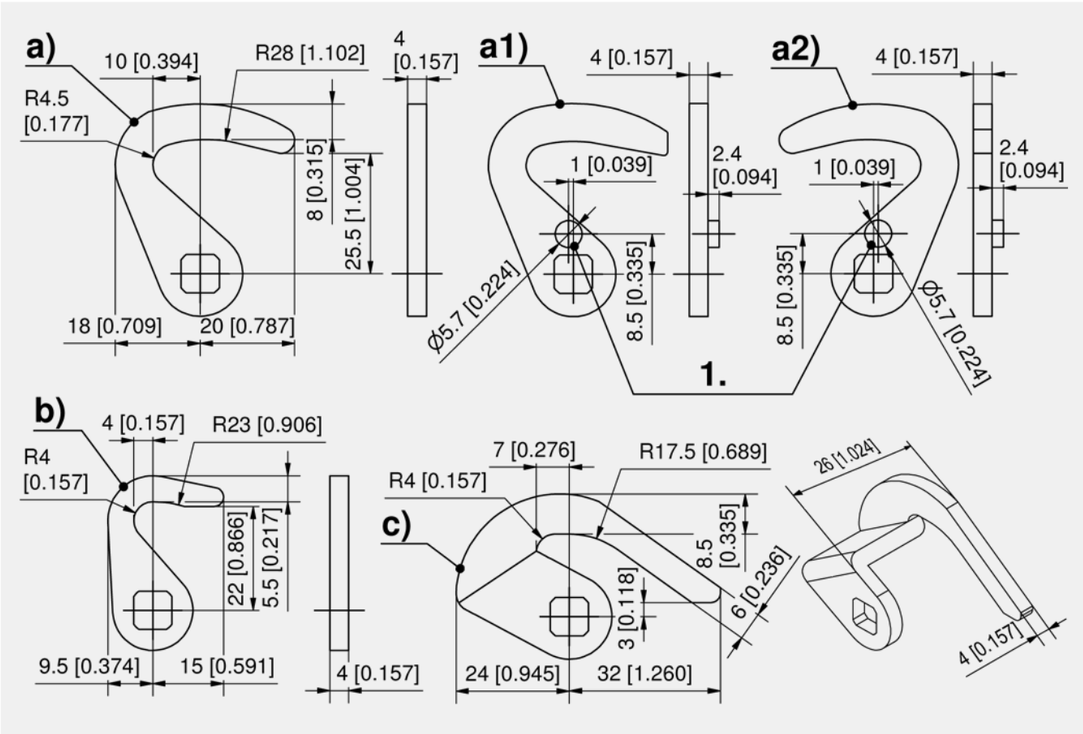

Hooked cams

	Part Number	Version	Stop	Delivery Unit
a)	200-1701.00-00000	RH / LH		10 pcs.
a1)	200-8143.00-00000	RH	Yes	10 pcs.
a2)	200-8144.00-00000	LH	Yes	10 pcs.
b)	200-1703.00-00000	RH / LH		10 pcs.
c)	200-1702.00-00000	RH		10 pcs.

all product details on DIRAK.com
1-260

Cams with Ramp

[1-261]

RoHS
WEEE

Advantages

- a) cam for quarter-turn series 200 with 25mm length.
- b) and c) cams for quarter-turn series 200 with 6mm ramp.

Materials

- **Cams:** steel, zinc plated

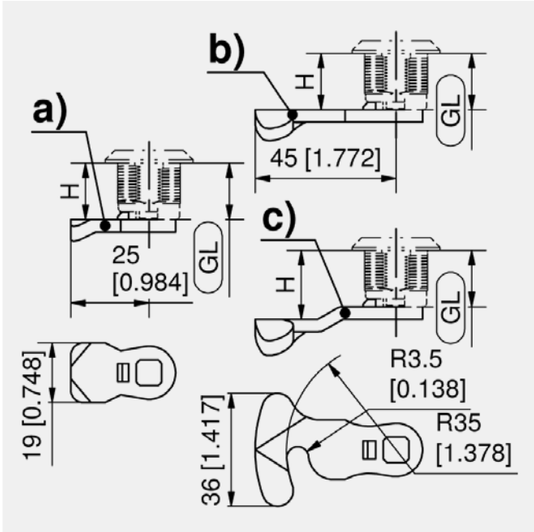

Cams with ramp

	Part Number	H-dimension	Ramp	Length	Stop	Delivery Unit
a)	200-5118.00-00000	18 mm	3mm	25 mm	Yes	10 pcs.
b)	200-4018.00-00000	18 mm	6mm	45 mm	Yes	10 pcs.
c)	200-4022.00-00000	22 mm	6mm	45 mm	Yes	10 pcs.

Cams variable

[1-262]

RoHS
WEEE

Advantages

- Special cams for quarter-turn series 200.

Materials

- **Cams:** steel, zinc plated

Remarks

Example for cam **with ramp**, with L=40 and H=20: 200-4440.00-00020

Example for cam **without ramp**, with L=40 and H=20: 200-5440.00-00020

Price and delivery time on request.

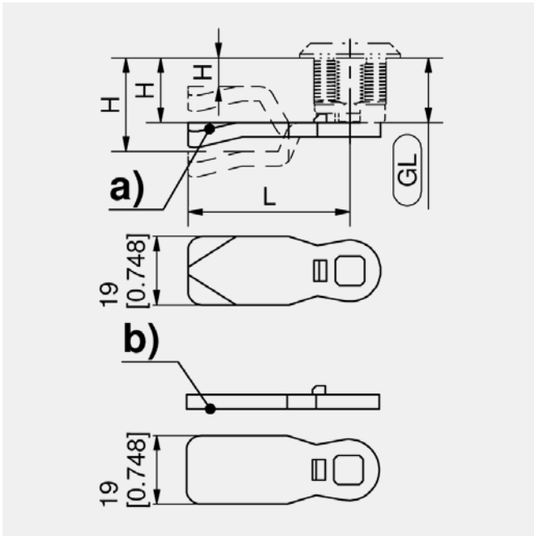

Cams, L-and H-dimension variable

	Part Number	Version	Stop	Delivery Unit
a)	200-44LL.00-Hxxmm	with ramp	Yes	on request
b)	200-54LL.00-Hxxmm	without ramp	Yes	on request

all product details on DIRAK.com
1-261
1-262

Slam-Cams [1-264]

Advantages

- Slam-cam for slam doors.
- Locking without key or tool.
- **To a):** the teflon washer replaces the wave washer underneath the insert.
- For use in combination with quarter-turns and inserts.
- **To b):** slam-cam with free-stroke for applications with cylinder locks and handles. For enclosure height 18mm.

Materials

- **Slam-cam:** zinc die, chrome plated
- **Spring:** steel, zinc plated
- **Spacer:** POM

Remarks

Please order quarter-turn completely pre-assembled by DIRAK.

For quarter-turns with longer housings, please contact DIRAK.

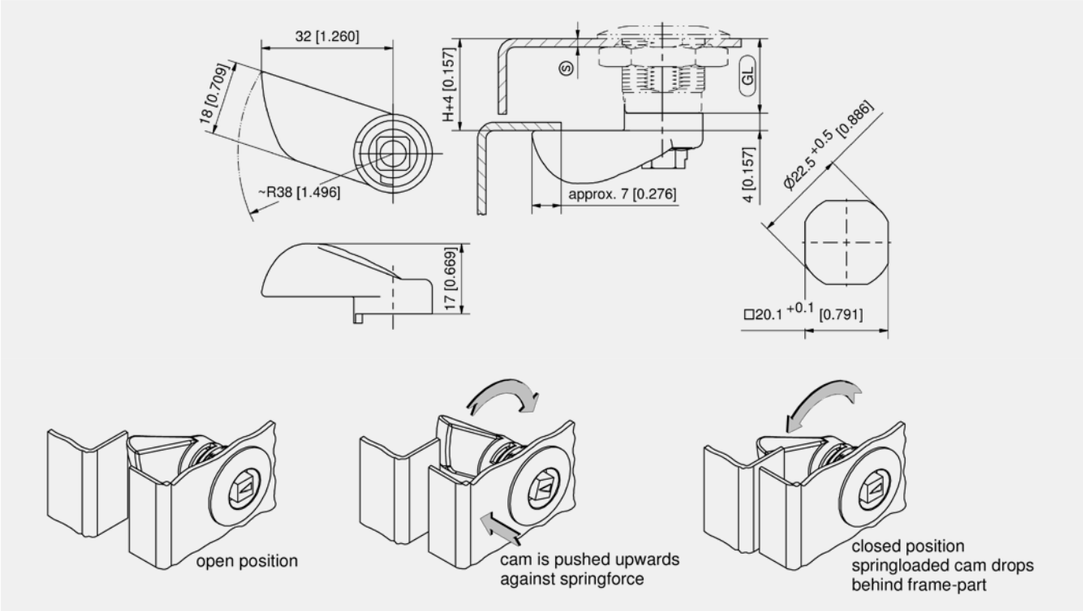

Slam-cams, length 32mm

	Part Number	Version	Type	Delivery Unit
a)	200-9605.00-00000	RH	for insert	10 pcs.
a)	200-9606.00-00000	LH	for insert	10 pcs.
b)	200-9607.00-00000	RH	for Cylinder Quarter-Turns and Handle variants	10 pcs.
b)	200-9608.00-00000	LH	for Cylinder Quarter-Turns and Handle variants	10 pcs.

	Accessories
76	1-100 **Quarter-Turn Pr20.1 L18**
150	1-101 **Inserts Pr20.1**
88	1-120 **Cylinder Quarter-Turn Pr20.1 L18**
91	1-120.01 **Cylinder Quarter-Turn Pr20.1 L30-50**
124	1-154 **L-Handle for Padlock Pr20.1 L18/40**
86	1-210 **Quarter-Turn with Conical Square Insert Pr20.1 L18**

1-264
all product details on DIRAK.com

Slam-Cams for Quarter-Turn Pr20.1 Stainless Steel [7-076]

Advantages

- Slam-cam for slam doors or flaps.
- Locking without key or tool.
- A slam-cam set consists of a cam, a spring and a serrated screw with self securing powder dot.
- This self securing powder dot is to tune / adjust the correct friction for the stroke.

Materials

- **Slam-cam:** AISI 316
- **Spring:** AISI 301
- **Serrated screw:** AISI 304

Remarks

Only for quarter-turns with insert.

On request, latch units with this cam should be assembled by DIRAK.

A pre-assembled quarter-turn can be installed through the cutout.

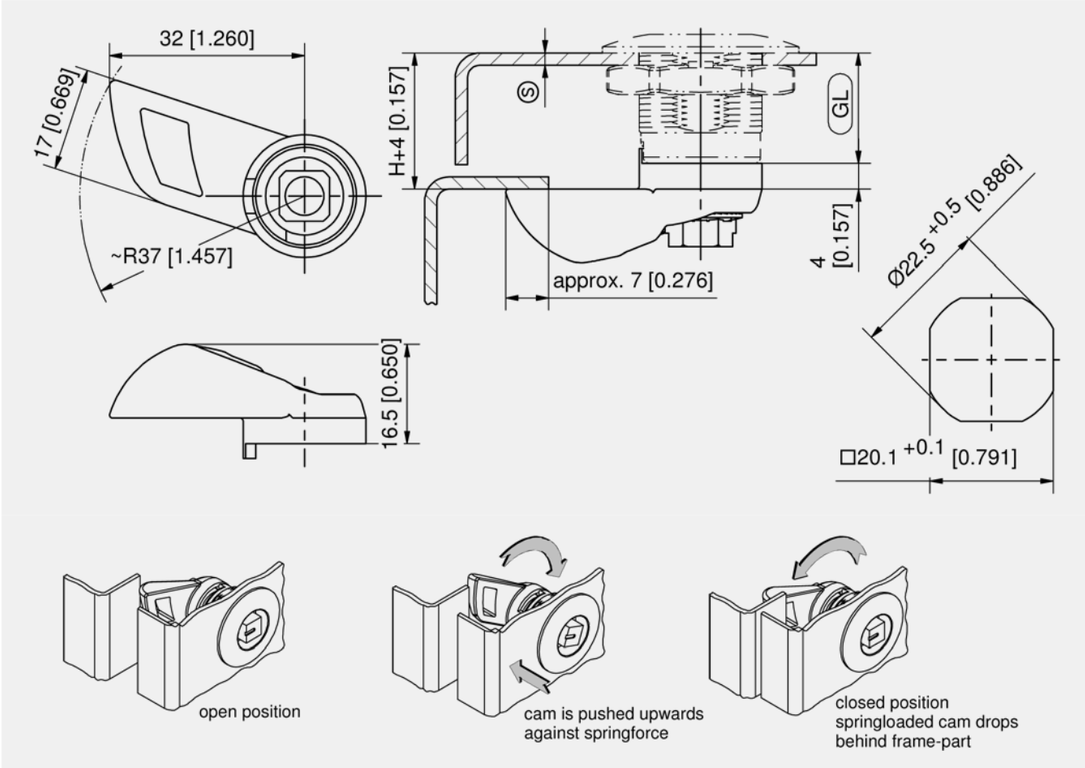

Slam-cams, length 32mm

Part Number	Version	Delivery Unit
200-9629.00-00000	RH	1 pc.
200-9630.00-00000	LH	1 pc.

	Accessories
83	7-080 **Quarter-Turn Pr20.1 L18 - L60 Stainless Steel**
78	7-080.01 **Quarter-Turn Pr20.1 L18 Stainless Steel**

all product details on DIRAK.com
7-076

Slam-Cam for Quarter-Turns Pr20.1

[1-265]

20

R L

RoHS WEEE

Advantages

- Slam-cam for slam doors. Locking without key or tool.
- The washer adjust the correct friction for the stroke.
- A pre-assembled quarter-turn can be installed through the cutout.

Materials

- **Slam-cam:** zinc die
- **Spring and countersunk screw:** steel, zinc plated
- **Stepped washer:** POM

Remarks

Only for quarter-turns with insert.

Please order quarter-turn completely pre-assembled by DIRAK.

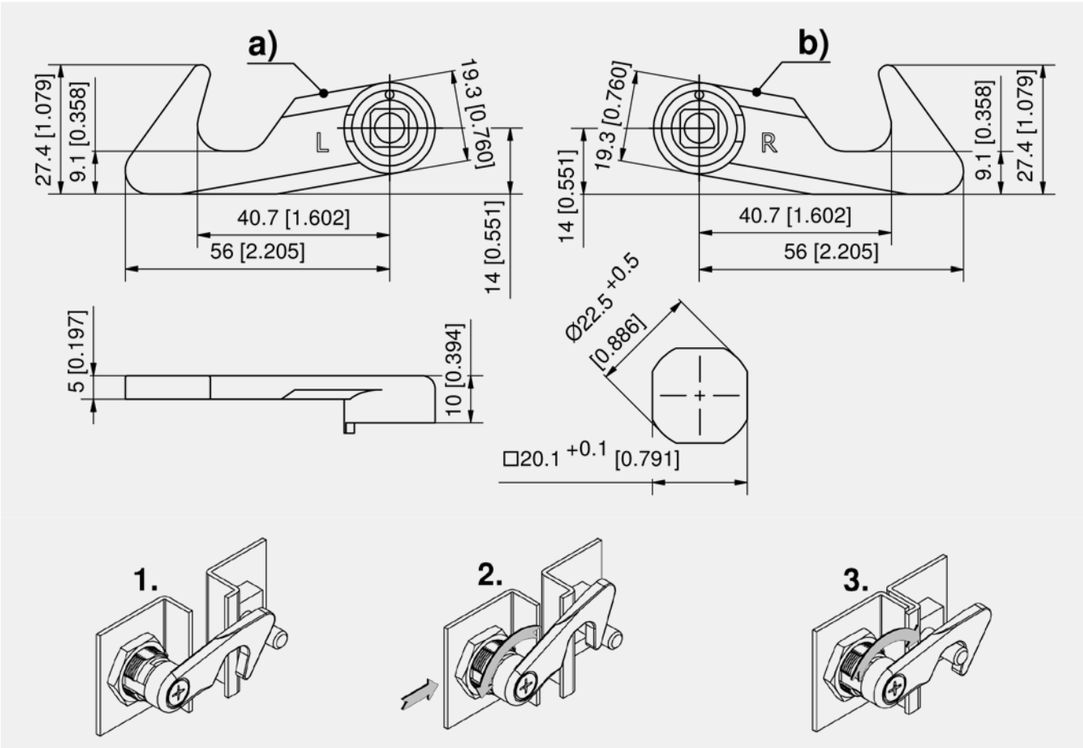

Slam-cam for inserts

	Part Number	Version	Installation type	Delivery Unit
a)	200-9639.00-00000	LH	screw-on	10 pcs.
b)	200-9638.00-00000	RH	screw-on	10 pcs.

	Accessories
76	1-100 **Quarter-Turn Pr20.1 L18**
150	1-101 **Inserts Pr20.1**
477	200-3704.00-00000 **Locking bolt for Pull and Lock Hook**

all product details on DIRAK.com
1-265

Roller Cam Height Adjustable

[1-105]

RoHS WEEE

Advantages

- The roller cam reduces the friction and eases the closing.
- No scratching or spalling of the paint at the inner part of the bending.
- Adjustable in height from H20 to H25.
- Suitable for all inserts, swing-handles and multipoint locking systems with square 8mm.
- H-dimension of the cam easy to adjust because of impressed height marks.

Materials

- **Cam:** zinc die, zinc plated
- **Roller:** PA, black
- **Tenon blocks, distance bushing:** zinc die, untreated
- **Socket head screw:** teel, zinc plated

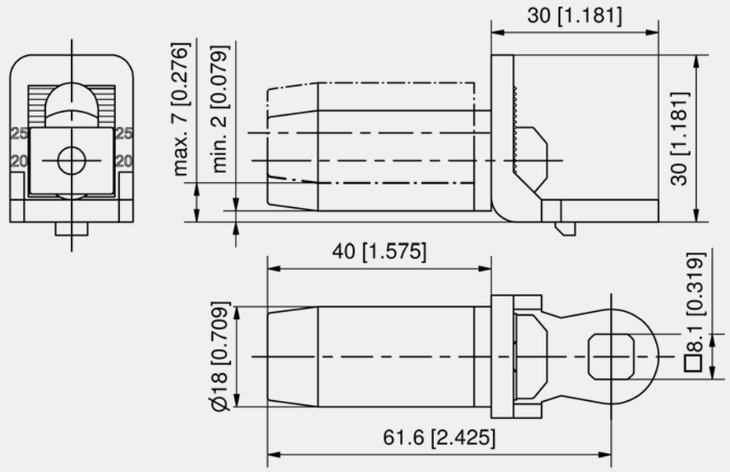

Roller cam

Part Number	variable H-dimension	Length	Diameter Ø	Delivery Unit
100-9755.00-00000	20 - 25 mm	61.6 mm	18 mm	10 pcs.

	Accessories
178, 298	2-151.01 **3-Point Adapter with Adjustment**
173, 300	2-151.02 **Adjustment**

all product details on DIRAK.com
1-105

DST Cam Catch

[1-050DST]

Advantages

- Concealed cam catch.
- RH / LH application.
- Tool-less clip-in assembly into a 30 x 10mm cutout in the frame.
- Available in 2 different heights, 10 and 16mm.
- IP65 according to DIN EN 60529 (optional).

Materials

- **Cam catch:** zinc die, black
- **Snap wedges:** sintered steel

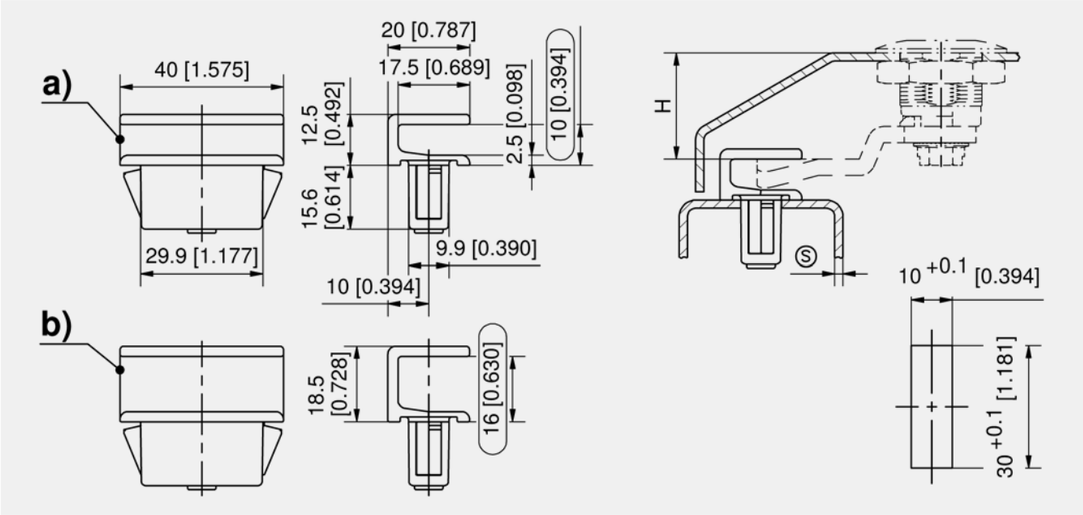

Cam catch

	Part Number	Clamping range (S)	Cam catch	Installation type	Delivery Unit
a)	408-9106.33-00010	0.7 - 1.2 mm	10mm	tool-less	10 pcs.
a)	408-9106.33-00015	1.2 - 1.7 mm	10mm	tool-less	10 pcs.
a)	408-9106.33-00020	1.7 - 2.2 mm	10mm	tool-less	10 pcs.
a)	408-9106.33-00025	2.2 - 2.7 mm	10mm	tool-less	10 pcs.
a)	408-9106.33-00030	2.7 - 3.2 mm	10mm	tool-less	10 pcs.
b)	408-9107.33-00010	0.7 - 1.2 mm	16mm	tool-less	10 pcs.
b)	408-9107.33-00015	1.2 - 1.7 mm	16mm	tool-less	10 pcs.
b)	408-9107.33-00020	1.7 - 2.2 mm	16mm	tool-less	10 pcs.
b)	408-9107.33-00025	2.2 - 2.7 mm	16mm	tool-less	10 pcs.
b)	408-9107.33-00030	2.7 - 3.2 mm	16mm	tool-less	10 pcs.

Accessories
762 292-0401.00-03010 **Cutout-cover**

Function extension
839-3770.00-02022 **O-ring 20 x 2.2mm**

1-050DST
all product details on DIRAK.com

Handles for Quarter-turns Pr20.1

[1-115]

Advantages

- Can be assembled afterwards for easier transport and packaging (flush).
- Inserts and screws are included.

Materials

- **Handle:** PA, black
- **Inserts:** zinc die, zinc plated

Remarks

Handles consist of:

1. cover
2. screw M6
3. handle element
4. insert with thread
5. spring washer
6. serrated screw

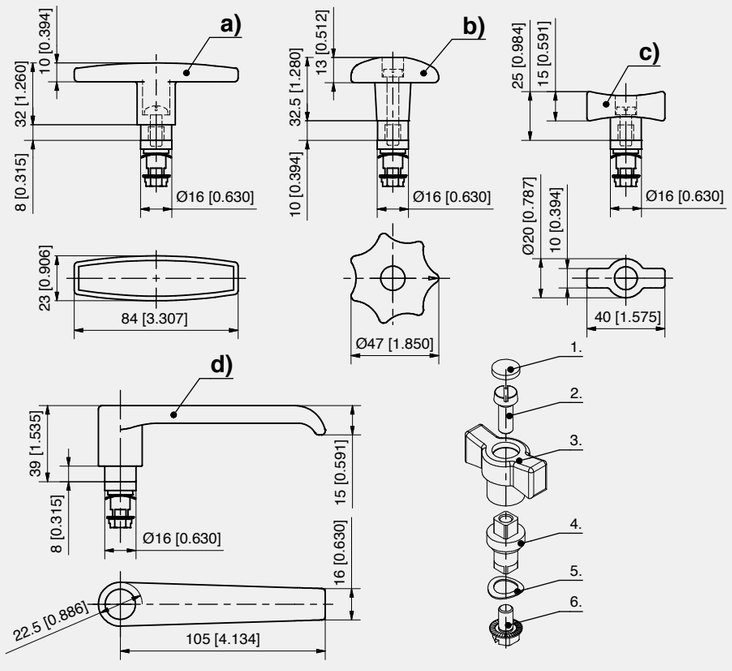

Handles for quarter-turns Pr20.1

	Part Number	Handle element	Delivery Unit
a)	200-9134.00-09137	T-handle with insert	1 pc.
b)	200-9135.00-09137	Star knob with insert	1 pc.
c)	200-9136.00-09137	Wing knob with insert	1 pc.
d)	200-9144.00-09137	L-handle with insert	1 pc.

all product details on DIRAK.com
1-115

Dish Pr20.1

[1-274]

20

RoHS
WEEE

Advantages

- Dish for quarter-turn installation in insulated doors.
- Decrease of the door-thickness of 21 mm.
- Expanded bearing face for fixing quarter-turns in insulated doors.

Materials

- **Dish:** steel, zinc plated

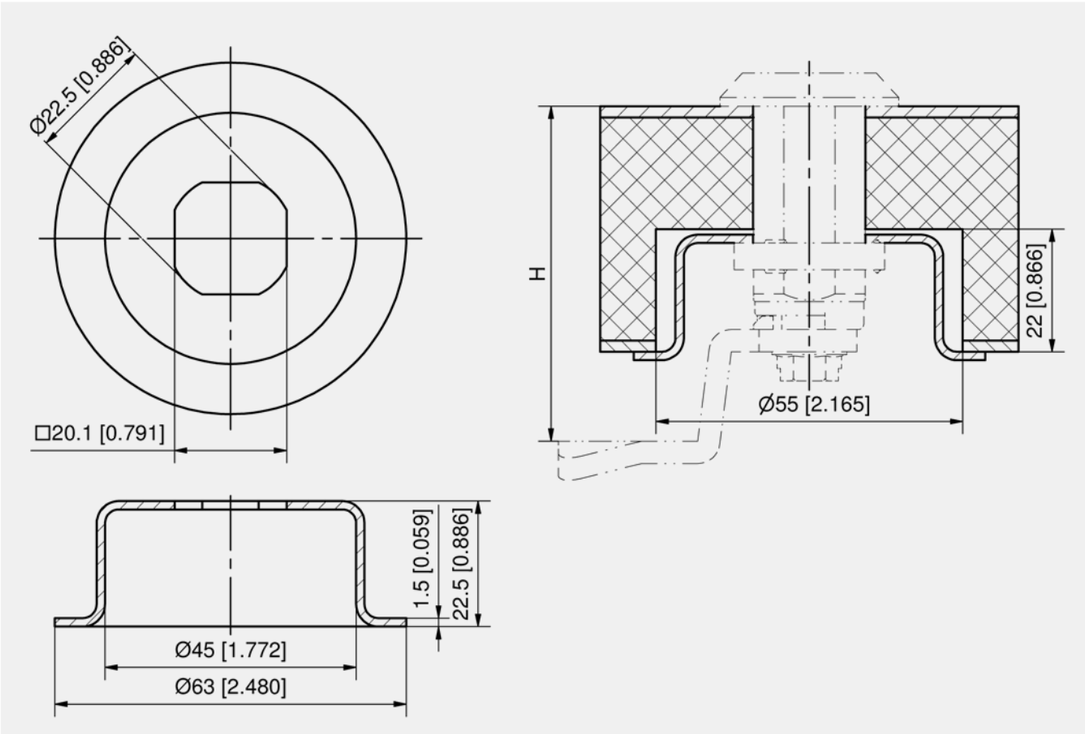

Dish

Part Number	Depth	Delivery Unit
200-3902.00-00000	21 mm	10 pcs.

1-274
◂ all product details on DIRAK.com

Emergency Handle + Accessories for Pr20.1

[1-275]

Quarter-Turns
Accessories

20

RoHS
WEEE

Advantages

- Emergency handle for internal unlocking for quarter-turns of the Pr20.1. Installation is with the cam.
- Anti-rotation device for all quarter-turns Pr20.1 with nut fastening.
- Distance ring to raise the quarter-turn heads Pr20.1
- Serrated lock washer as protection against the connection unintentionally coming loose due to vibrations.
- Quarter-turn extension for extending quarter-turns by 6.5mm Pr20.1. Screwed on under the housing with the cam.

Materials

- **Emergency handle:** zinc die, red
- **Anti-rotation device:** zinc die, zinc plated or black
- **Serrated lock washer:** steel, zinc plated or stainless steel
- **Spacer:** steel, black or chrome plated, or zinc die, chrome plated or black
- **Quarter-turn extension:** zinc die, zinc plated

Remarks

1. please note length of screw

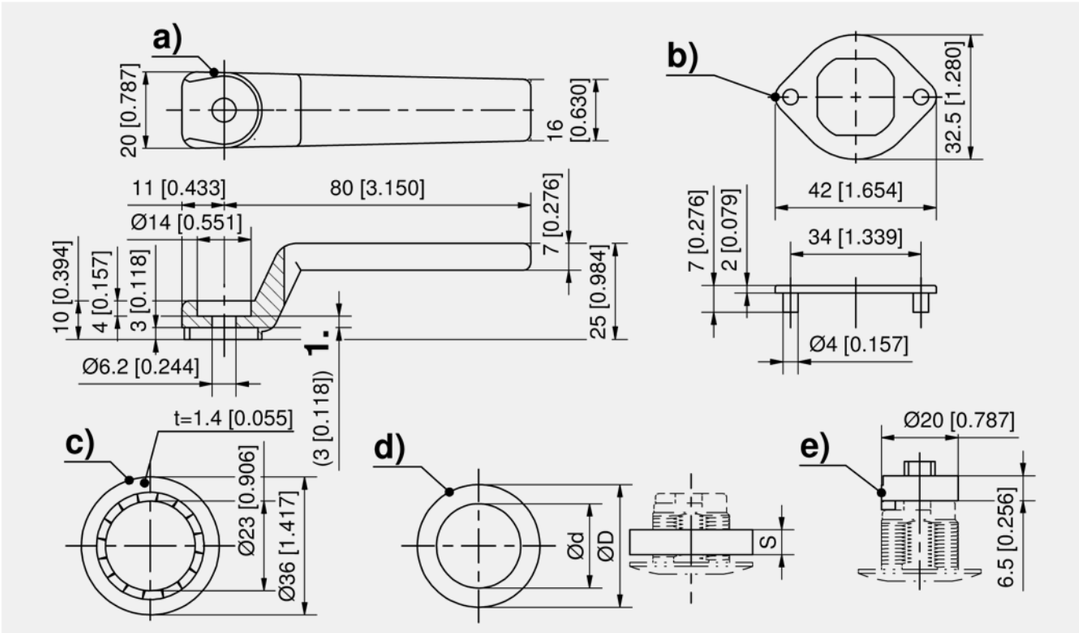

Accessories quarter-turn

	Part Number	Name	Material	Surface	D	d	S	Delivery Unit
a)	200-4701.00-00000	Emergency handle	zinc die	red				10 pcs.
b)	200-4601.00-00000	Anti-rotation device	zinc die	zinc plated				10 pcs.
b)	200-4601.02-00000	Anti-rotation device	zinc die	black				10 pcs.
c)	800-0064.00-00000	Serrated lock washer	steel	zinc plated				10 pcs.
c)	840-6798.00-00023	Serrated lock washer	stainless steel					10 pcs.
d)	200-4608.00-00000	Spacer	steel	black	28 mm	21.9 mm	4 mm	10 pcs.
d)	200-4610.00-00000	Spacer	steel	chrome plated	30 mm	21.9 mm	4 mm	10 pcs.
d)	200-4611.01-00000	Spacer	zinc die	chrome plated	32 mm	21.7 mm	6.6 mm	10 pcs.
d)	200-4611.02-00000	Spacer	zinc die	black	32 mm	21.7 mm	6.6 mm	10 pcs.
e)	200-2809.35-00000	Quarter-turn extension	zinc die	zinc plated	32 mm		6.5 mm	10 pcs.

all product details ▸ on DIRAK.com
1-275

Dust Caps and Sealing Plug Pr20.1

[1-270]

20

IP 65/67

IP 65

RoHS WEEE

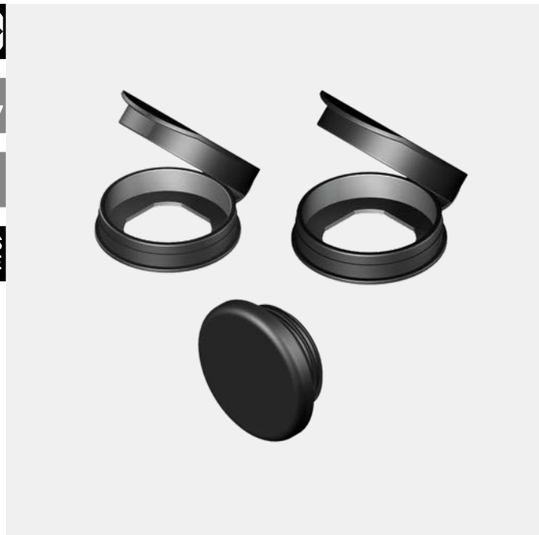

Advantages

- **Dust caps** for head Ø28mm - Ø32mm.
- **Material TPU: e**xcellent resistance to pure mineral oils and greases.
- **Sealing plugs** for inner diameter Ø16.1mm and Ø18.1mm.
- Tight according to DIN EN 60529.

Materials

- **Dust cap:** PP or TPU, black
- **Sealing plug:** NBR+PVC, black

Remarks

When using the dust cap a) the H-dimension changes by 1.2mm.

When using the dust cap b), the H-dimension changes by 2.8mm. (The dust cap is equipped with sealing ribs (t=3.2mm) which are compressed to t=2.8mm with a tightening torque of 15Nm.)

The sealing plug c) is only for out-side triangular respectively square insert!

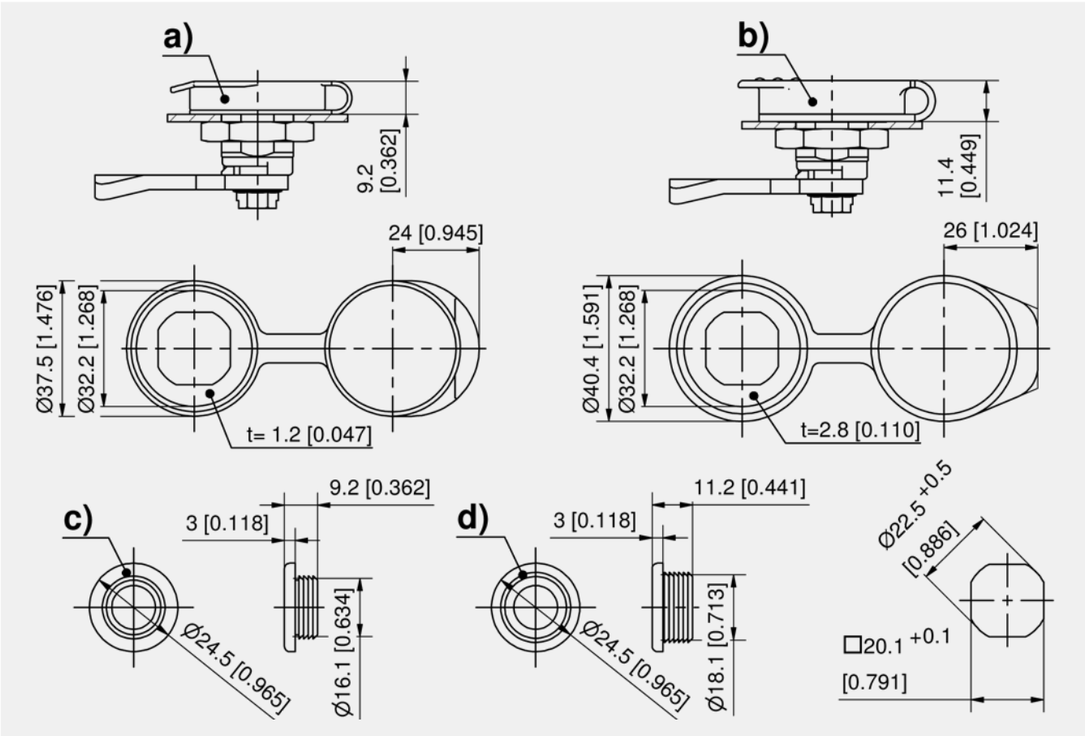

Accessories quarter-turn

	Part Number	Name	Diameter Ø	IP protection	Material	Temperature range	Delivery Unit
a)	200-4101.00-00000	Dust cap		IP65	PP	0° to +80°C	10 pcs.
b)	200-4103.00-00000	Dust cap		IP65/67	TPU	-40° to +100°C	10 pcs.
c)	292-0606.00-00000	Sealing plug	16.1 mm	IP65	NBR+PVC		10 pcs.
d)	292-0605.00-00000	Sealing plug	18.1 mm	IP65	NBR+PVC		10 pcs.

1-270
◂ all product details on DIRAK.com

Spring-Loaded Flap Lid Pr20.1

[1-270.02]

20

R L

RoHS WEEE

Advantages

- Enclosing flap provides protection against soiling.
- The spring-loaded, enclosing flap falls back into the closed position at any time after operation and thus reliably protects against dust and water.
- Retrofittable for quarter-turns with insert and cylinder quarter-turns.
- For head diameter max. 32mm and head height 6mm.
- 180° Opening angle.
- Integrated stop protects the quarter-turn surface from damages.
- Integrated finger pull enables easy handling even with work or safety gloves.

Materials

- **Lid and bottom:** PA, black
- **Knurled pin and leg spring:** stainless steel

Remarks

Complete tightness of the quarter-turn is **not achieved** with the spring-loaded flap lid alone!

When using the spring-loaded flap lid the H-dimension changes by 2mm!

- When using the spring-loaded flap lid, the flat external seal can be omitted (flap lid has sealing lips).

1. sealing lip

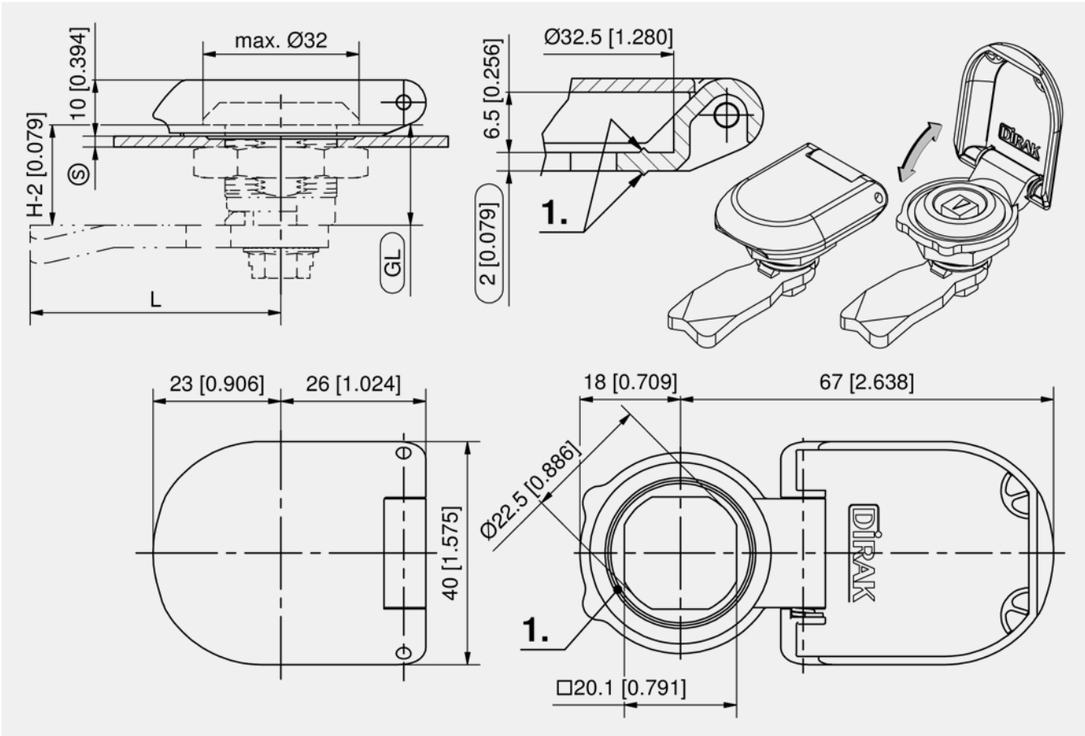

Accessories quarter-turn

Part Number	Name	Delivery Unit
237-9307.00-00000	Spring-Loaded Flap Lid Pr20.1	10 pcs.

all product details ▸ on DIRAK.com
1-270.02

Finger Pull for Quarter-Turn Pr20.1

[1-270.01]

20

RoHS WEEE

Advantages

- For head Ø28 mm see product system 1-083, 1-095, 1-100, 1-120, 1-121, 1-210, 7-080 and 7-082.
- For head Ø30/32 mm see product system 1-077, 1-081, 1-085, 1-086, 1-092, 1-100, 1-110, 1-120, 1-200, 7-080.01 and 7-084.

Materials

- **Finger pull:** PA, black

Remarks

1. area for company name or logo

With Logo on request.

By using a finger pull the H-dimension changes by 2mm.

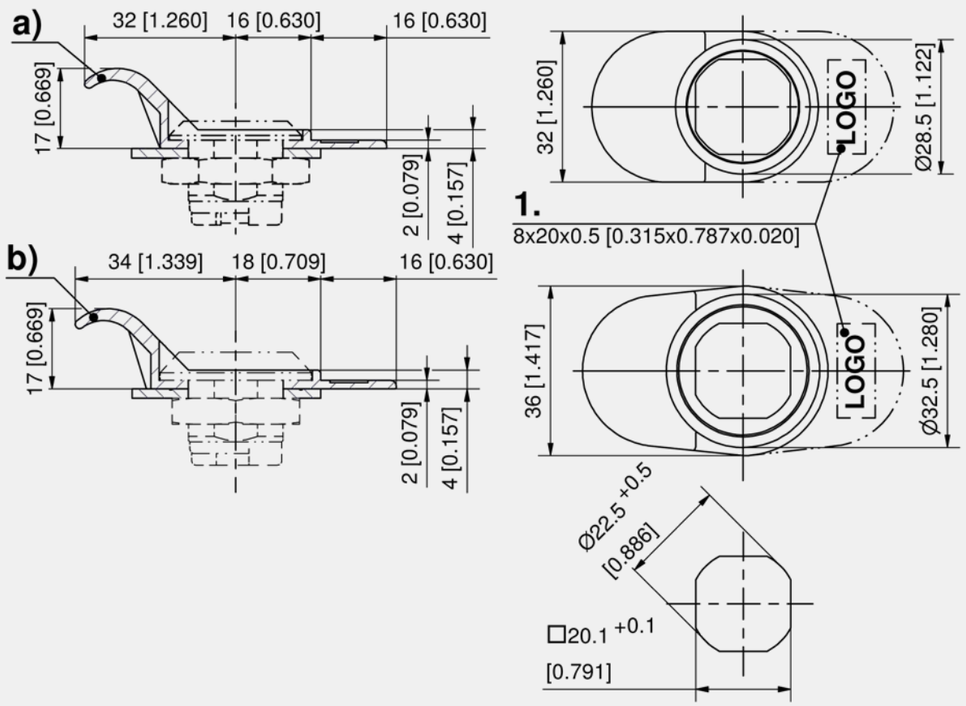

Accessories quarter-turn

	Part Number	Name	Recess for label	Delivery Unit
a)	200-4703.03-00000	Finger pull for Ø28	No	10 pcs.
a)	200-4704.03-00000	Finger pull for Ø28	Yes	10 pcs.
b)	200-4705.03-00000	Finger pull for Ø32	No	10 pcs.
b)	200-4706.03-00000	Finger pull for Ø32	Yes	10 pcs.

1-270.01

◂ all product details on DIRAK.com

H-Dimension Adjustment

[2-151.02]

Advantages

- Suitable for all M10 square threaded rods.
- Tool-less adjustment for standard cams 1-102.
- Variable and easy adjustment with knurled wheel.
- 0.25mm of adjustment per click.
- Vibration-proof.
- Readjustment possible at any time (e.g. compressed sealing).
- For cams with and without stop.

Materials

- **Catch:** PA, black
- **Knurled wheel:** zinc die, zinc plated

Remarks

1. recess for cams with stop
2. detent (6x)

b) quarter-turn PS 1-102

c) cams PS 1-102.01

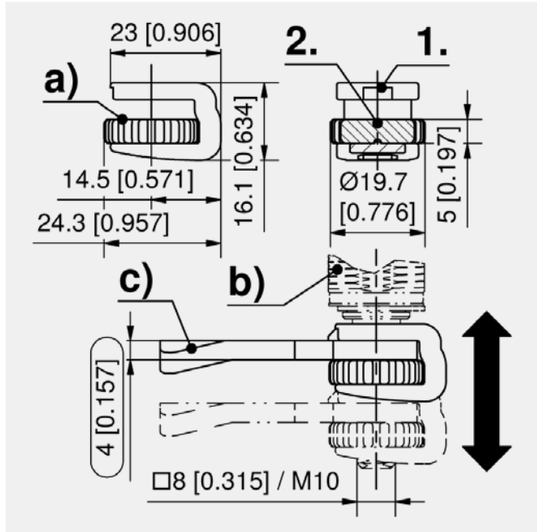

Catch with knurled wheel

	Part Number	Thread size	Installation type	Delivery Unit
a)	248-9901.00-00000	M10	tool-less	20 pcs.

H-Dimension Adjustment Stainless Steel

[7-077.02]

Advantages

- Suitable for all M10 square threaded rods.
- For tool-less adjustment of cams (with and without stop).
- Variable and easy adjustment with knurled wheel.
- 0.25mm of adjustment per click.
- Readjustment possible (e.g. compressed sealing).
- Vibration-proof.

Materials

- **Catch:** AISI 301
- **Knurled wheel:** AISI 316

Remarks

1. recess for cams with stop
2. detent

b) quarter-turn

c) cams PS 7-105 and PS 7-105.01

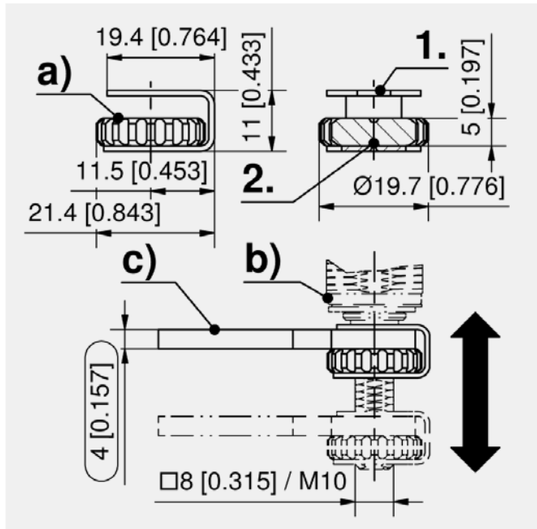

Catch with knurled wheel

	Part Number	Thread size	Installation type	Delivery Unit
a)	248-9904.00-00000	M10	tool-less	1 pc.

all product details ▸ on DIRAK.com

2-151.02

7-077.02

DIRAK

Cams Height Adjustable L45 Stainless Steel [7-077]

DIN 61373

RoHS WEEE

Advantages

- For quarter-turns and compression quarter-turns with square threaded rod.
- Seismic-proof according to GR-63-CORE, Issue 4.
- Vibration-proof according to DIN EN 61373.
- Tool-less adjustment.
- Variable adjustments can easily be made using knurled wheel.
- Adjustment range depending on the length of the square threaded rod.
- Can be readjusted at any time (compressed sealing).
- Each detent achieves 0.25mm adjustment.

Materials

- **Cam and knurled wheel:** AISI 316, untreated
- **Washer:** AISI 304, untreated
- **Compression spring:** AISI 301, untreated

Remarks

1. adjustment range of the cam with 30mm axis = 9mm

2. adjustment range of the cam with 40mm axis = 19mm

Included in delivery: cam, knurled wheel, spring and washer

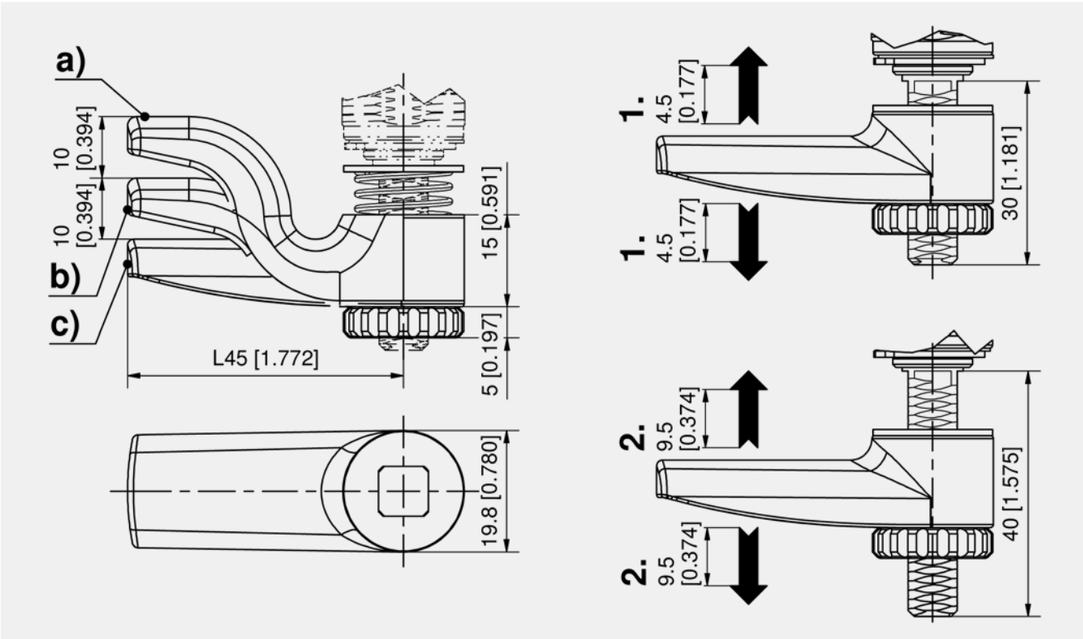

Height adjustable cams

	Part Number	variable H-dimension	Installation type	Delivery Unit
a)	100-9079.00-00002	20 - 29 mm	tool-less	10 pcs.
b)	100-9079.00-00001	30 - 39 mm	tool-less	10 pcs.
c)	100-9079.00-00000	40 - 49 mm	tool-less	10 pcs.

7-077
all product details on DIRAK.com

DIRAK

2-, 3- and 4-Point Cam Adapter [2-151]

RoHS WEEE

Advantages

- 3-point cam adapter for cams of product system 1-102.
- With and without 90° stop.
- The raised rod stub is necessary for swinghandles, enabling the lower rod passing over the lower cap.
- 4-Point cam adapter: with additional linkage.
- For those applications, where beyond the standard control of 2 locking-rods, an additional rod can be used. E.g. controlling a switch or defeater-mechanism.

Materials

- **3-point cam adapter and 4-point cam adapter:** zinc die, zinc plated

Remarks

Incl. 2 c-clips

Note: H-dimension of cam (C) increases by 4mm. E.g. cam 200-0418 results in an H-dimension of 22mm.

Please pay attention to the screw length: screw should enter at least 6mm.

1. with stop

2. wthout stop

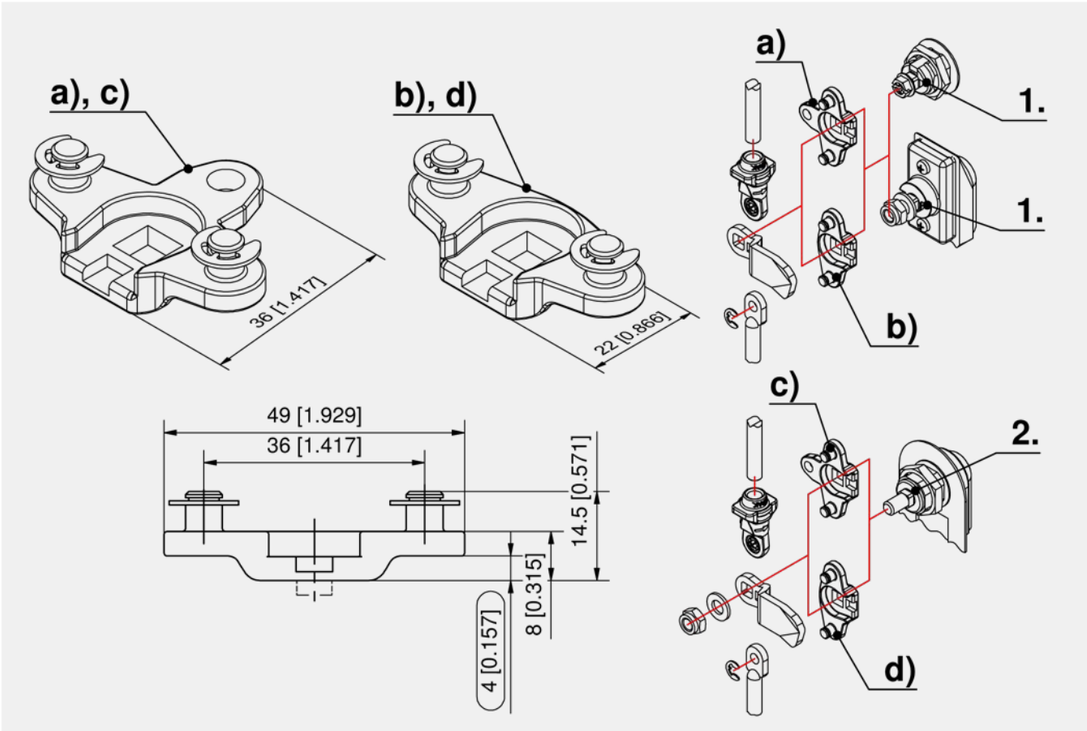

Adapter for 3-point cam

	Part Number	Stop	2-point locking	3-point locking	4-point locking	Installation type	Delivery Unit
a)	200-9595.00-00000	Yes	Yes	Yes	Yes	screw-on	1 pc.
b)	200-9596.00-00000	Yes	Yes	Yes	No	screw-on	1 pc.
c)	207-9595.00-00000	No	Yes	Yes	Yes	screw-on	1 pc.
d)	207-9596.00-00000	No	Yes	Yes	No	screw-on	1 pc.

	Accessories
154, 292	1-102 **Cams L35/45 Steel**

all product details on DIRAK.com
2-151

3-Point Cam Adapter

[2-151.04]

Advantages

- 3-point cam adapter for cams of product system 1-102.
- The adapter is attached to the back of the cam does not affect the H-dimension.

Materials

- **3-point cam adapter:** zinc die, zinc plated

Remarks

Incl. 2 c-clips

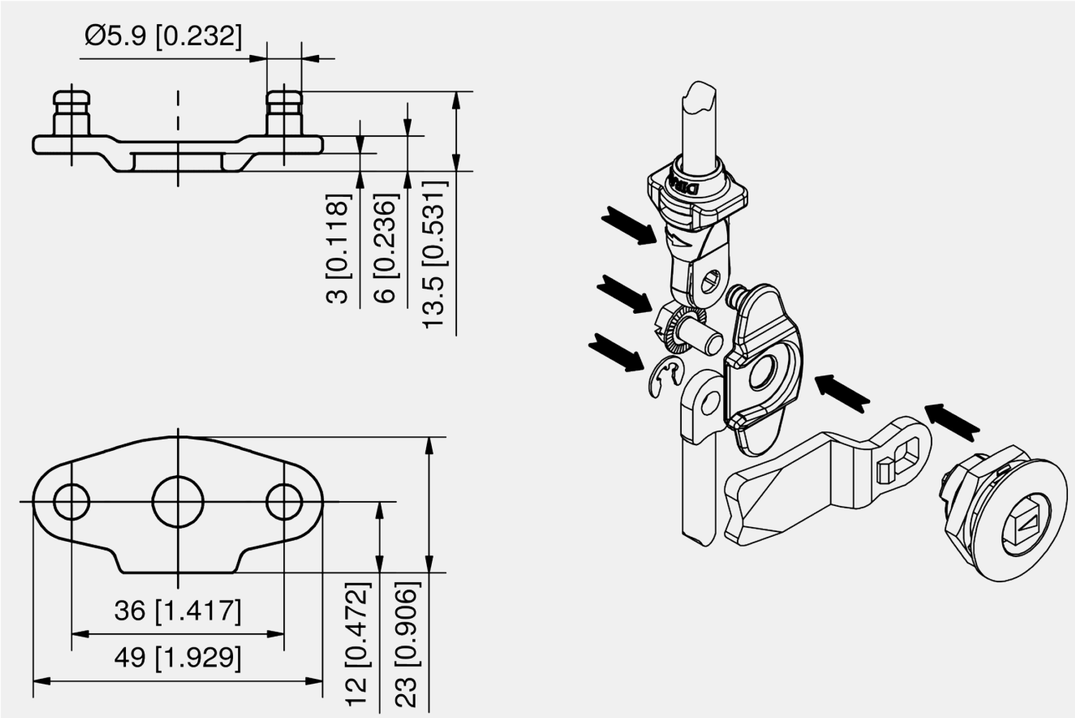

Cam adapter

Part Number	3-point locking	Installation type	Delivery Unit
207-9589.00-00000	Yes	screw-on	1 pc.

all product details on DIRAK.com
2-151.04

3- and 4-Point Cam Adapter Stainless Steel

[7-106.02]

Advantages

- For use in combination with standard cams see product system 1-102 and 7-080, used for 3- and 4-point latching applications.
- For 4-point application use additional link. For those applications, where beyond the standard control of 2 locking-rods, an additional rod can be used (e.g. controlling a switch or defeatermechanism).
- The adapter is attached to the back of the cam and does not affect the H-dimension!

Materials

- **Multipoint cam adapter:** AISI 304

Remarks

3- and 4-point cam adapter alternative to 2- or 3-point cam, see product system 7-105.

1. loop

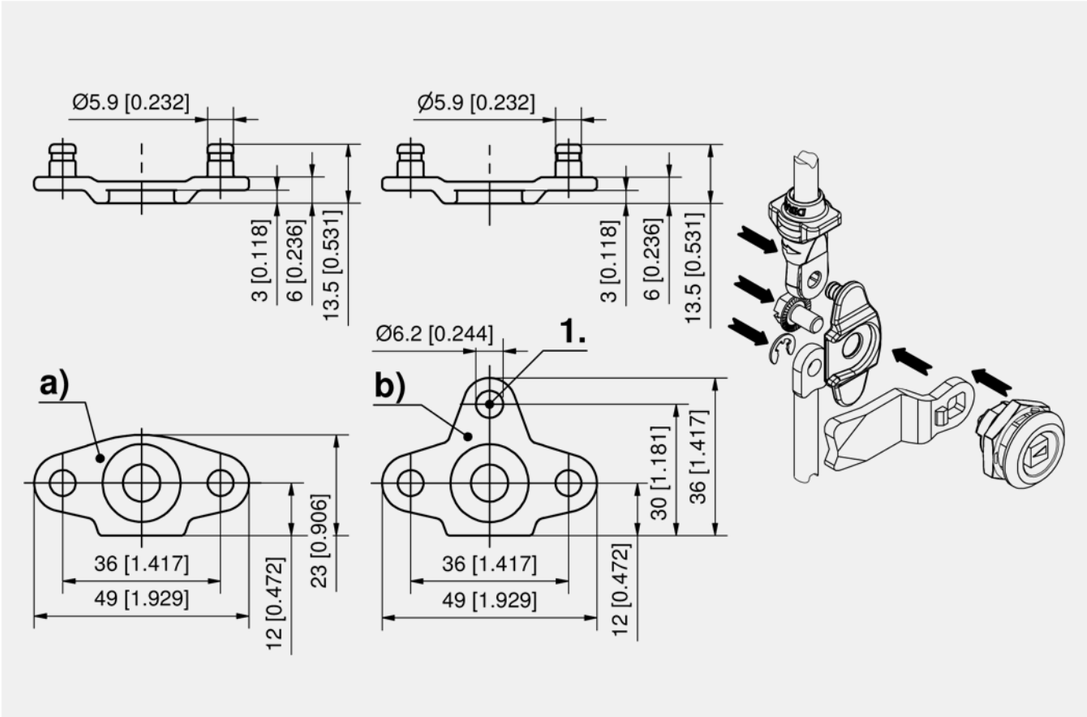

Cam adapter

	Part Number	3-point locking	4-point locking	Installation type	Delivery Unit
a)	207-9590.00-00000	Yes	No	screw-on	1 pc.
b)	207-9592.00-00000	Yes	Yes	screw-on	1 pc.

all product details on DIRAK.com
7-106.02

3-Point Adapter with H-Dimension Adjustment [2-151.01]

Advantages

- 3-point cam adapter for cams Pr20.1, tool-less adjustable.
- RH/ LH application.
- Axial adjustable.
- Usable with standard cams.
- Readjustable at any time.
- 3-point locking system.
- Knurled wheel with thread M10.

Materials

- **3-Point cam adapter:** zinc die, zinc plated

Remarks

Incl. 2 c-clips

1. recess for cams with stop

2. detent

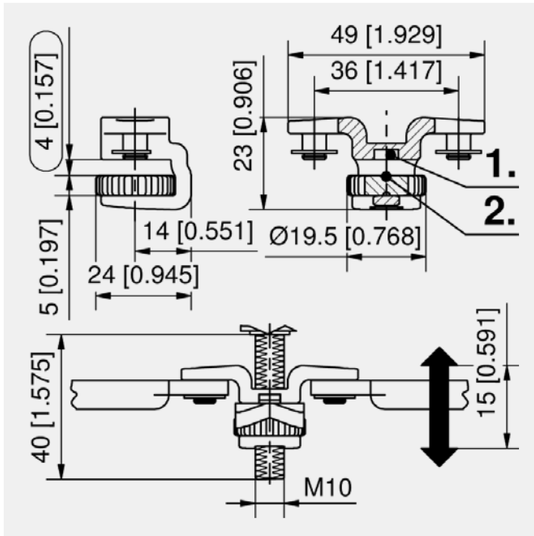

Cam adapter

	Part Number	Version	3-point locking	Installation type	Delivery Unit
	200-9632.00-00000	knurled wheel M10	Yes	tool-less	1 pc.

3-Point Cam Adapter 45° Zinc Die [2-151.03]

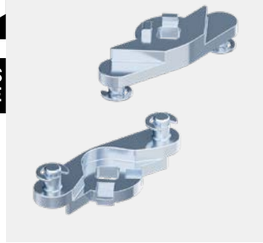

Advantages

- 3-point cam adapter with stop made of zinc die.

Materials

- **3-point cam adapter:** zinc die, zinc plated
- **Locking washer:** steel, zinc plated

Anmerkungen

All cams of product system 1-102 can be applied.

Note: H-dimension of cam increases by 4mm. E.g. cam 200-0418 results in a H-dimension of 22mm. See product system 2-151.

1. stroke 35mm

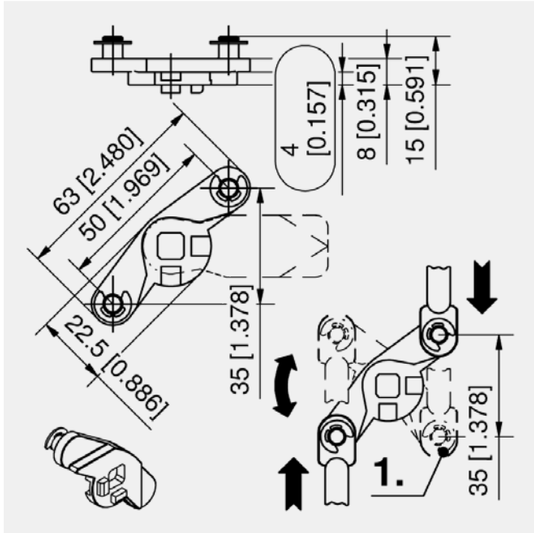

Cam adapter

Part Number	Stop	2-point locking	3-point locking	Delivery Unit
200-9594.00-00000	Yes	Yes	Yes	1 pc.

*	Function extension
179, 283	1-170 **Round Rods with Eye**

2-151.01

all product details on DIRAK.com

Round Rods with Eye [1-170]

Advantages

- Round rods in standard length and variable lengths with pressed eye.
- With a flat end.
- With chamfered end.
- Version c) for 3-point cams.
- Version d) for rod latches.
- With rollers, dimension L up to top of roller.

Materials

- **Round rods:** steel, zinc plated

Remarks

Round rods in standard length: from stock.

Bushing d) only suitable for round rod a) and b)

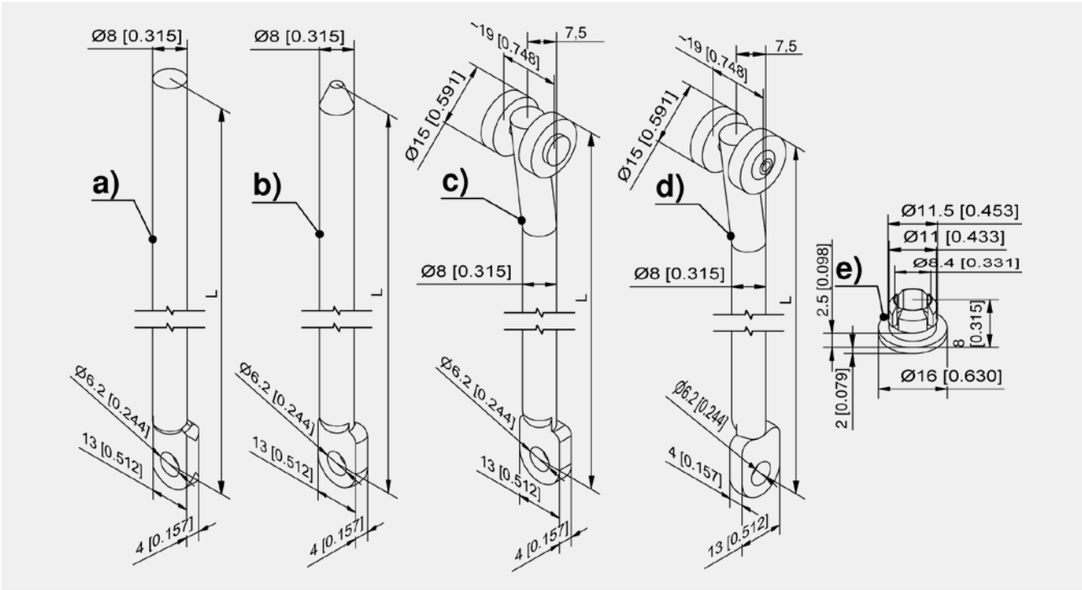

Round rods Ø 8mm

	Part Number	Version	Length	variable length	Delivery Unit
a)	201-0102.00-00000	with eye	400 mm		1 pc.
a)	201-0103.00-00000	with eye	500 mm		1 pc.
a)	201-0104.00-00000	with eye	600 mm		1 pc.
a)	201-0105.00-00000	with eye	700 mm		1 pc.
a)	201-0106.00-00000	with eye	800 mm		1 pc.
a)	201-0107.00-00000	with eye	900 mm		1 pc.
a)	201-0108.00-00000	with eye	1000 mm		1 pc.
a)	201-0109.00-00000	with eye	1100 mm		1 pc.
a)	201-0110.00-00000	with eye	1200 mm		1 pc.
a)	201-0112.00-Lxxmm	with eye		Yes	on request
b)	201-0111.00-Lxxmm	with eye and chamfered end		Yes	on request
c)	201-9006.00-Lxxmm	with eye and rollers		Yes	on request
d)	201-9021.00-Lxxmm	with eye and rollers, eye parallel to the roller		Yes	on request

+	Accessories
e)	203-0605.03-00000 **Bushing Ø8**

all product details on DIRAK.com

1-170

Round Rods for Adapter

[1-180]

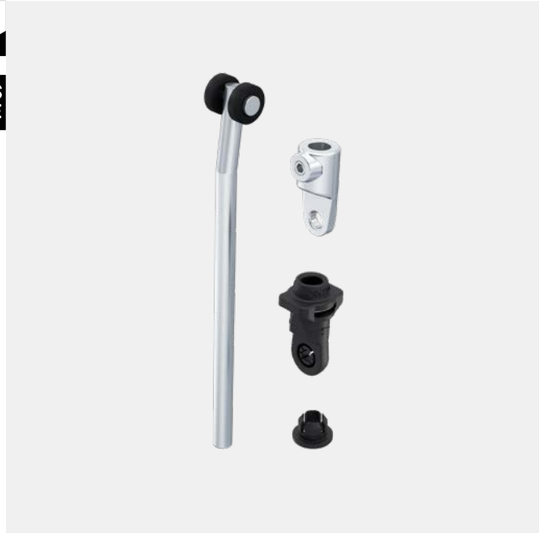

Advantages

- Round rods in standard length and variable lengths for adapter.
- With rollers, dimension L up to top of roller.

Materials

- **Round rods and rivet:** steel, zinc plated
- **Rollers:** PA, black

Remarks

Round rods in standard lengths: from stock

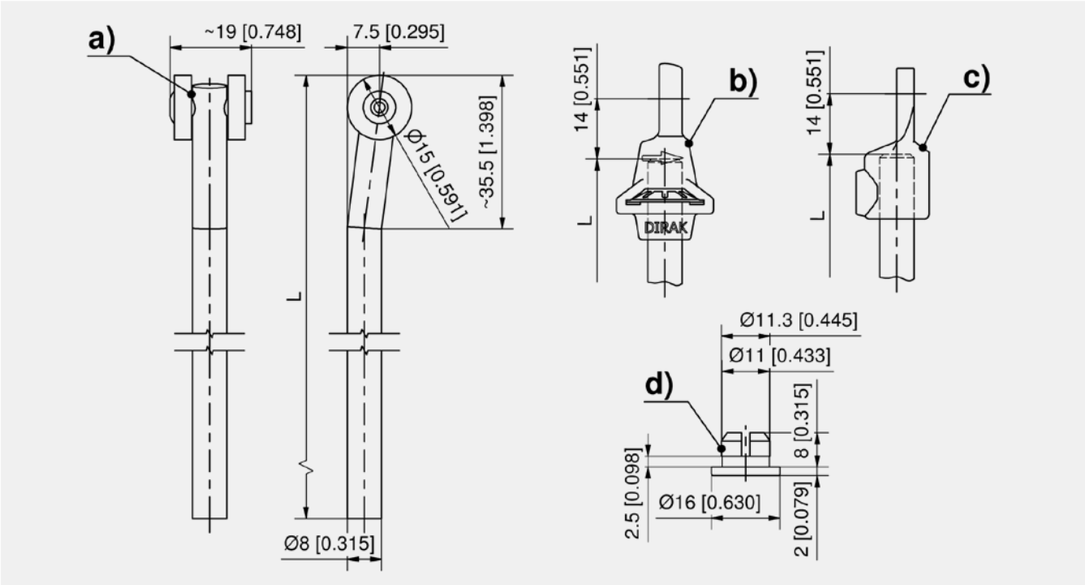

Round rods with rollers Ø 8mm

	Part Number	Length	variable length	Delivery Unit
a)	201-9001.00-00000	400 mm		1 pc.
a)	201-9020.00-00500	500 mm		1 pc.
a)	201-9002.00-00000	600 mm		1 pc.
a)	201-9020.00-00700	700 mm		1 pc.
a)	201-9003.00-00000	800 mm		1 pc.
a)	201-9020.00-00900	900 mm		1 pc.
a)	201-9004.00-00000	1000 mm		1 pc.
a)	201-9020.00-01100	1100 mm		1 pc.
a)	201-9005.00-00000	1200 mm		1 pc.
a)	201-9020.00-Lxxmm		Yes	on request

	Accessories
b)	181, 285 1-181 **Adapter for Round Rods Ø8mm PA**
c)	181, 285 1-181.01 **Adapter for Round Rods Ø8mm / Ø10mm Zinc Die**
d)	203-0605.03-00000 **Bushing Ø8**

all product details on DIRAK.com
1-180

Adapter for Round Rods Ø8mm PA

[1-181]

Advantages

- Tool-less installation.
- For 3-point cam adapter and 3-point cam.
- Rattle-free fastening.
- The rod is simply and non-detachably pressed into the adapter.
- No c-clips can be lost.
- For 90° rotation.

Materials

- **Adapter:** PA, black
- **Clamping ring:** spring steel

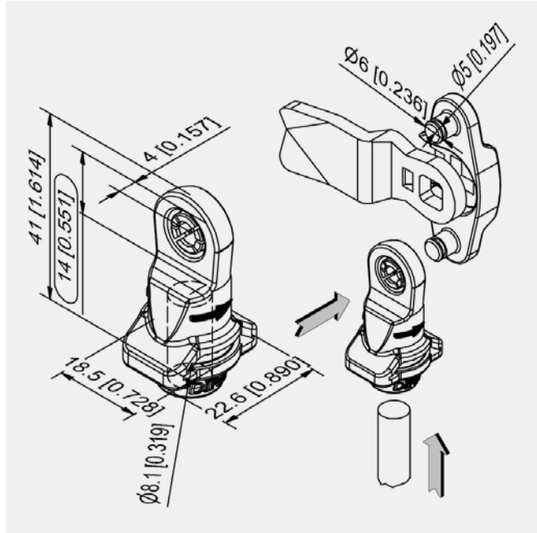

Adapter for round rods

Part Number	Rod diameter Ø	quick-fit	Installation type	Delivery Unit
200-9621.00-00000	8 mm	Yes	tool-less	1 pc.

Adapter for Round Rods Ø8mm / Ø10mm Zinc Die

[1-181.01]

Advantages

- For 3-point cam adapter and 3-point cams.
- Fastening of the round rod by set screw.
- The adapter is fixed with a c-clip to the 3-point cam adapter or 3-point cam.
- For 90° rotation.

Materials

- **Adapter:** zinc die
- **Set screw:** steel, zinc plated

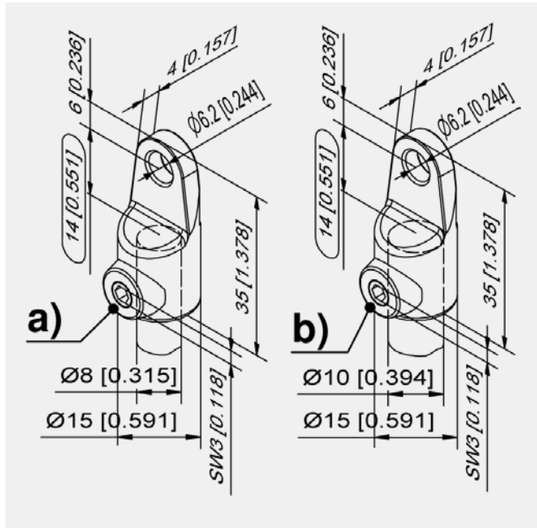

Adapter for round rods

	Part Number	Rod diameter Ø	Installation type	Delivery Unit
a)	200-9601.00-00000	8 mm	screw-on	1 pc.
b)	200-9604.00-00000	10 mm	screw-on	50 pcs.

all product details on DIRAK.com
1-181
1-181.01

Round Rods Stainless Steel

[7-106]

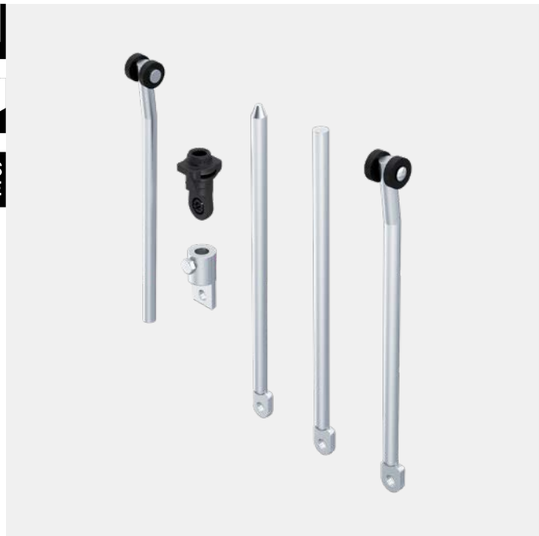

Advantages

- Round rods with standard or customized lengths, different versions.

Materials

- **Round rods and rivet:** AISI 304
- **Rollers:** PA, black

Remarks

Order example for round rods with eye and rollers, length L=840mm: 201-9026.00-00840

Bushing g) only for round rods a), b), c) and e)

Attention: dimension L measured to top of roller!

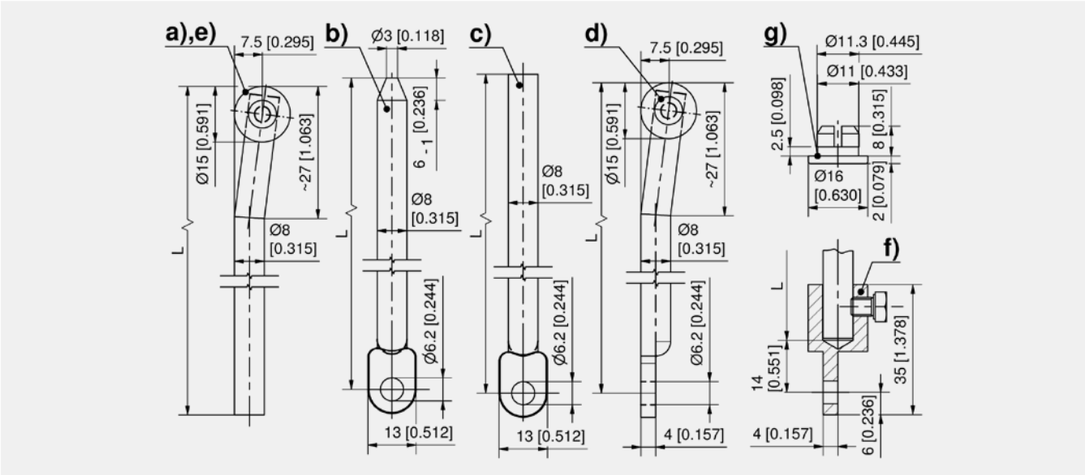

Round rods with rollers Ø 8mm for adapter

	Part Number	Length	Delivery Unit
a)	201-9010.00-00000	600 mm	1 pc.
a)	201-9011.00-00000	700 mm	1 pc.
a)	201-9012.00-00000	800 mm	1 pc.
a)	201-9013.00-00000	900 mm	1 pc.
a)	201-9014.00-00000	1000 mm	1 pc.
a)	201-9015.00-00000	1100 mm	1 pc.
a)	201-9016.00-00000	1200 mm	1 pc.

Round rods Ø 8mm, variable length

	Part Number	Version	Delivery Unit
b)	201-0111.04-Lxxmm	with eye and chamfered end	on request
c)	201-0112.04-Lxxmm	with eye and flat end	on request
d)	201-9026.00-Lxxmm	with eye and rollers	on request
e)	201-9037.00-Lxxmm	with rollers, for adapter	on request

Accessories
f) 183, 287 200-9603.00-00000 **Adapter for Round Rods Ø8mm Stainless Steel**
g) 203-0605.03-00000 **Bushing Ø8**
181, 285 200-9621.00-00000 **Adapter for Round Rods Ø8mm PA**

all product details on DIRAK.com
7-106

Adapter for Round Rods Ø8mm Stainless Steel

[7-106.03]

Advantages

- For 3-point cam adapter and 3-point cams.
- Fastening of the round rod by set screw.
- The adapter is fixed with a c-clip to the 3-point cam adapter or 3-point cam.
- For 90° rotation.

Materials

Adapter: AISI 303

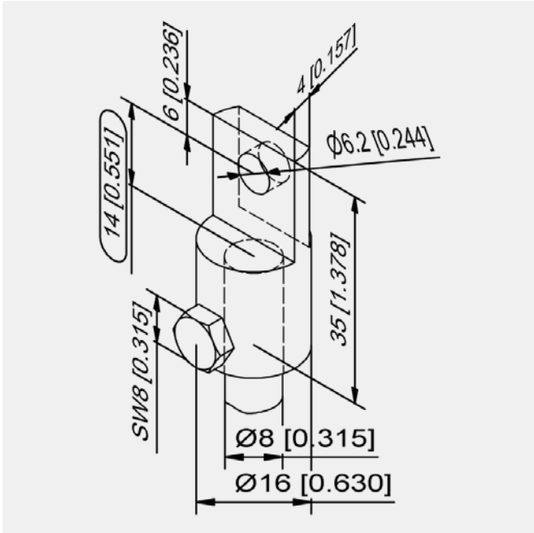

Adapter for round rods Ø 8mm

Part Number	Fastening type	Delivery Unit
200-9603.00-00000	screw-on	1 pc.

Rod Guide RS Height Adjustable Stainless Steel

[7-912]

Advantages

- Rod guide with adjustable height for 8 mm round rods, to compensate production tolerances, or if sealing has set.
- Slotted insert (max.12 x 2 mm).

Materials

- **Rod guide:** AISI 316
- **Adjusting screw:** AISI 303
- **C-clip and wave washer:** stainless steel

Remarks

Adjustment depending on the lenght of the weld stud:

M6 x 14 +5/-1 mm,

M6 x 16 +5/-3 mm,

M6 x 18 +5/-5 mm,

M6 x 20 +5/-7 mm

More information see product system 1-192.

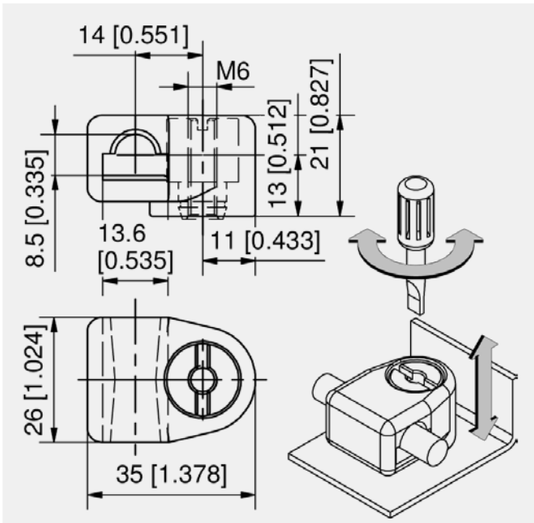

Rod guide

Part Number	Height adjustable	Adjustment range	Installation type	Delivery Unit
200-9623.00-00000	Yes	max. + 5 mm	screw-on	1 pc.

all product details on DIRAK.com
7-106.03
7-912

Rod Guide RS Height Adjustable

[1-191]

Advantages

- Rod guide is pushed onto the knurled nut and can be installed therefore pre-assembled.
- Tool-less adjustment with knurled nut.
- Readjustment possible at any time.
- Dismantling of the rod for height adjustment not necessary.
- Usable for studs M6 from 14 to 21mm.
- Adjustment range up to max. 8mm.
- RH / LH application.

Materials

- **Rod guide and knurled nut:** PA, black

Remarks

1. rod guide
2. knurled nut
3. stud
4. round rod

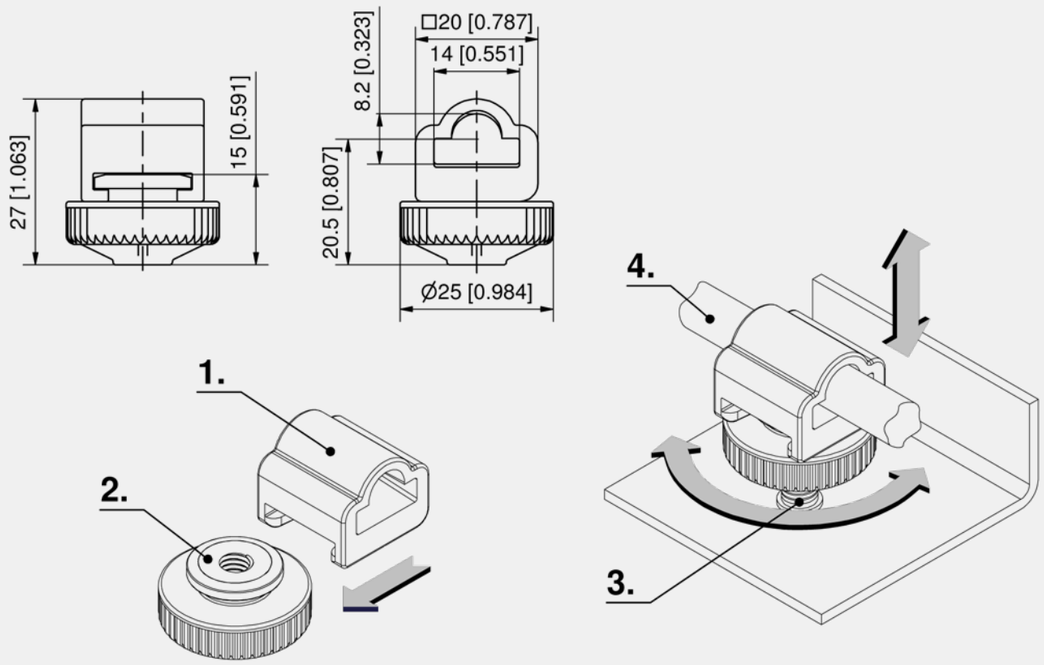

Rod guide

Part Number	Height adjustable	Adjustment range	Installation type	Delivery Unit
200-9633.00-00000	Yes	max. 8 mm	tool-less	10 pcs.

all product details on DIRAK.com
1-191

Rod Guides RS

[1-192]

Advantages

- Rod guides for 8mm round rods.
- Version a) adjustable in height to compensate production tolerances or if sealing has set.
- The rod guide can be adjusted in height by a slotted insert (max.12 x 2mm).
- With this rod guide even completely pre-assembled rod-latch systems can be installed, because the rod guide can be screwed onto the thread of the weld studs M6, by turning the threaded sleeve.
- The round shape of the hole allows free swivelling even with very short rods.

Materials

- **Rod guide:** PA, black
- **Adjusting Sleeve:** steel, zinc plated
- **Snap ring:** stainless steel

Remarks

Adjustment depending on the lenght of the weld stud:

M6 x 14 +5/-1mm,

M6 x 16 +5/-3mm,

M6 x 18 +5/-5mm,

M6 x 20 +5/-7mm

Stainless steel version see product system 7-912.

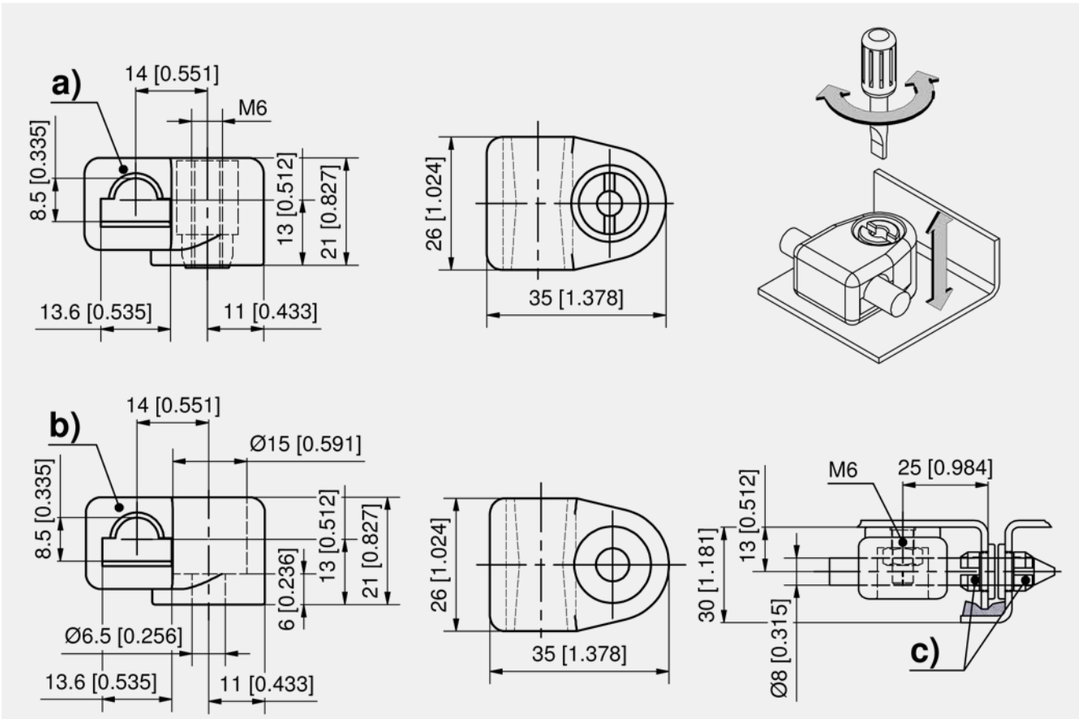

Rod guide

	Part Number	Height adjustable	Adjustment range	Installation type	Delivery Unit
a)	200-9615.00-00000	Yes	max. + 5 mm	screw-on	1 pc.
b)	200-3606.03-00000			screw-on	1 pc.

Accessories
c) 203-0605.03-00000 **Bushing Ø8**

all product details on DIRAK.com
1-192

Rod Guides RS

RoHS
WEEE

Advantages

- With molded thread.
- Screwed onto a weld stud or weld-on screw.
- The round shape of the hole allows free swivelling even with very short rods.

Materials

- **Rod guide:** PA, black

Remarks

1. length of the weld studs or screws M6:

16mm for A20

20mm for A24/A26

25mm for A28

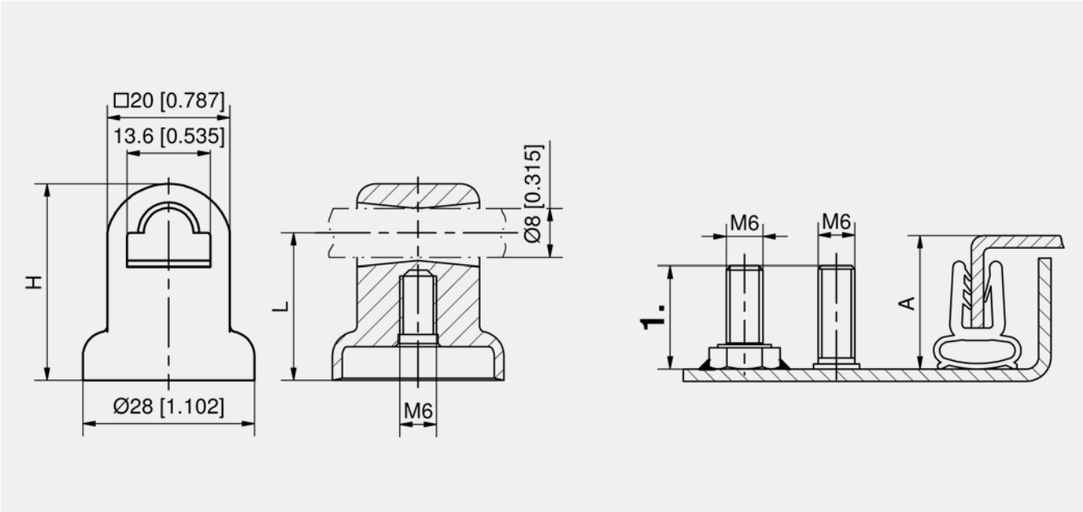

Rod guides

Part Number	Height H	A = bending	L	Installation type	Delivery Unit
200-3623.51-00000	32 mm	A20	24 mm	screw-on	1 pc.
200-3624.51-00000	36 mm	A24	28 mm	screw-on	1 pc.
200-3625.51-00000	38 mm	A26	30 mm	screw-on	1 pc.
200-3626.51-00000	40 mm	A28	32 mm	screw-on	1 pc.

all product details
on DIRAK.com
1-190

Rod Guides RS

RoHS
WEEE

Advantages

- For 8mm round rods for installation without tools on weld-stud M6x20mm.
- The rod guide has to be placed over the weld stud and then pushed onto the thread until a "click" is audible. It is locked now in the final position.
- Visual inspection possible from above through openings.
- The rod guide can be removed from the threaded stud by inserting a flat head screwdriver, pushing the jaws apart and sliding the rod guide out.

Materials

- **Rod guide:** PA6, black

Remarks

Completely pre-assembled rod latches (including 3-point cam, round rod, rollers and rod guide) can also be mounted with this rod guide, as the rod guide is simply pushed over the weld stud.

The rod guide must be installed as shown in the figure.

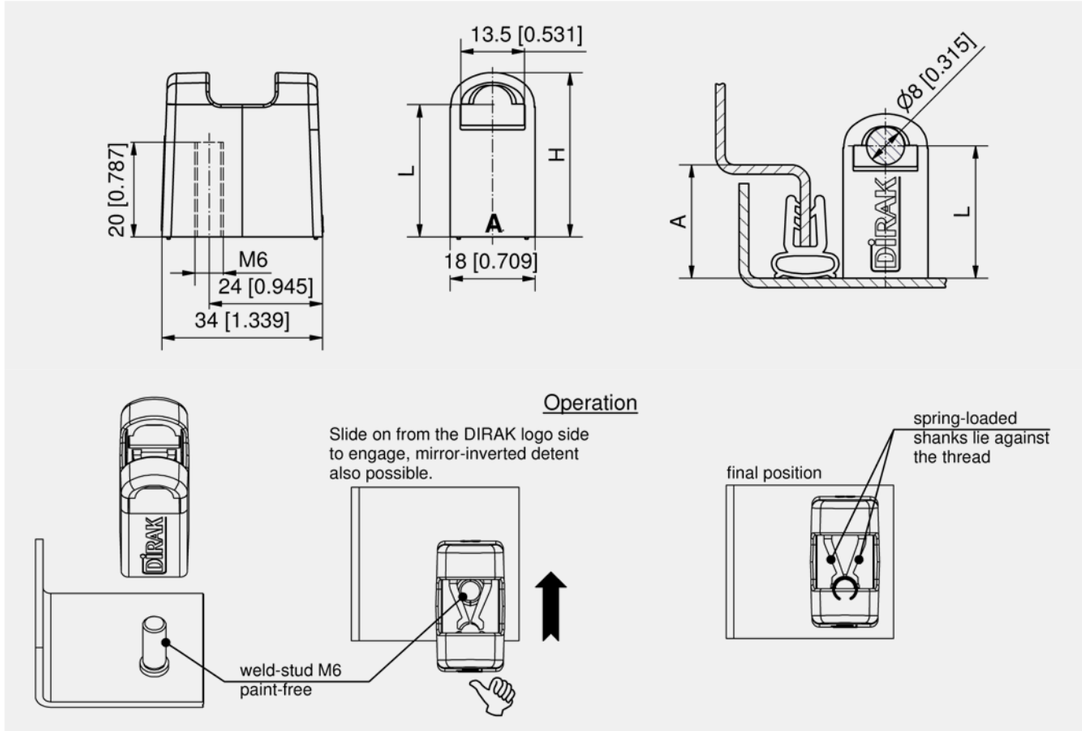

Rod guides

Part Number	Height H	A = bending	L	Installation type	Delivery Unit
200-3616.54-00000	35 mm	A24	28 mm	tool-less	1 pc.
200-3617.54-00000	37 mm	A26	30 mm	tool-less	1 pc.
200-3618.54-00000	39 mm	A28	32 mm	tool-less	1 pc.

all product details
on DIRAK.com
1-193

Adapter and Spacer

[1-263]

Advantages

- For designing multipoint locking systems.
- RH / LH application.
- Flexible use on quarter-turns with 18mm housings or swinghandles.
- As the examples show, the controlling quarter-turn (2.) can be installed in different positions.

Materials

- **Adapter and spacer:** zinc die, zinc plated
- **C-clip:** steel, zinc plated

Remarks

1. weld-stud M6x32

e) and f): for flat rods please contact DIRAK.

H-dimension (18) only for sheet thickness 2mm.

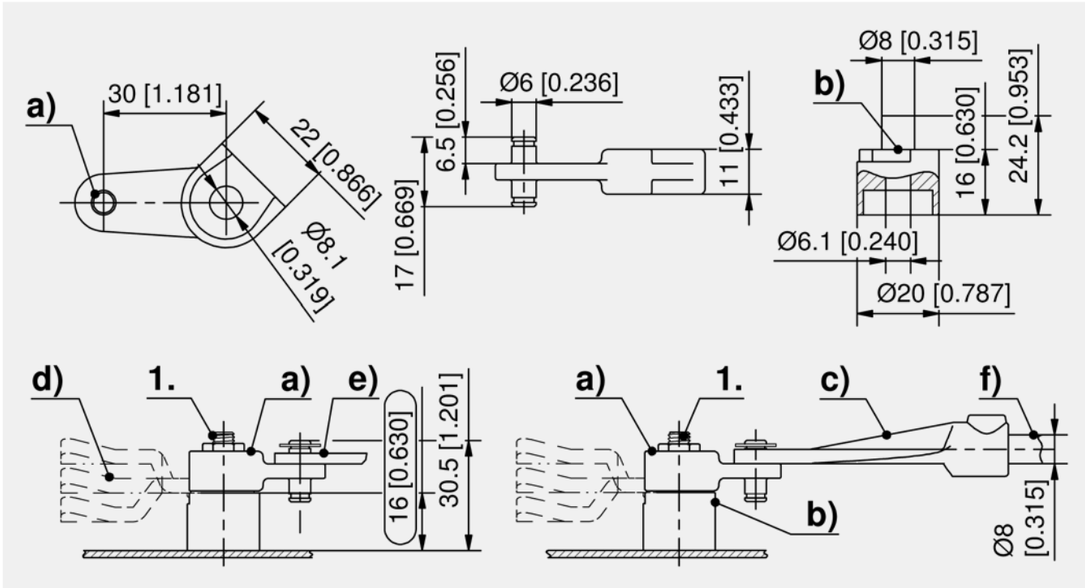

all product details on DIRAK.com
1-263

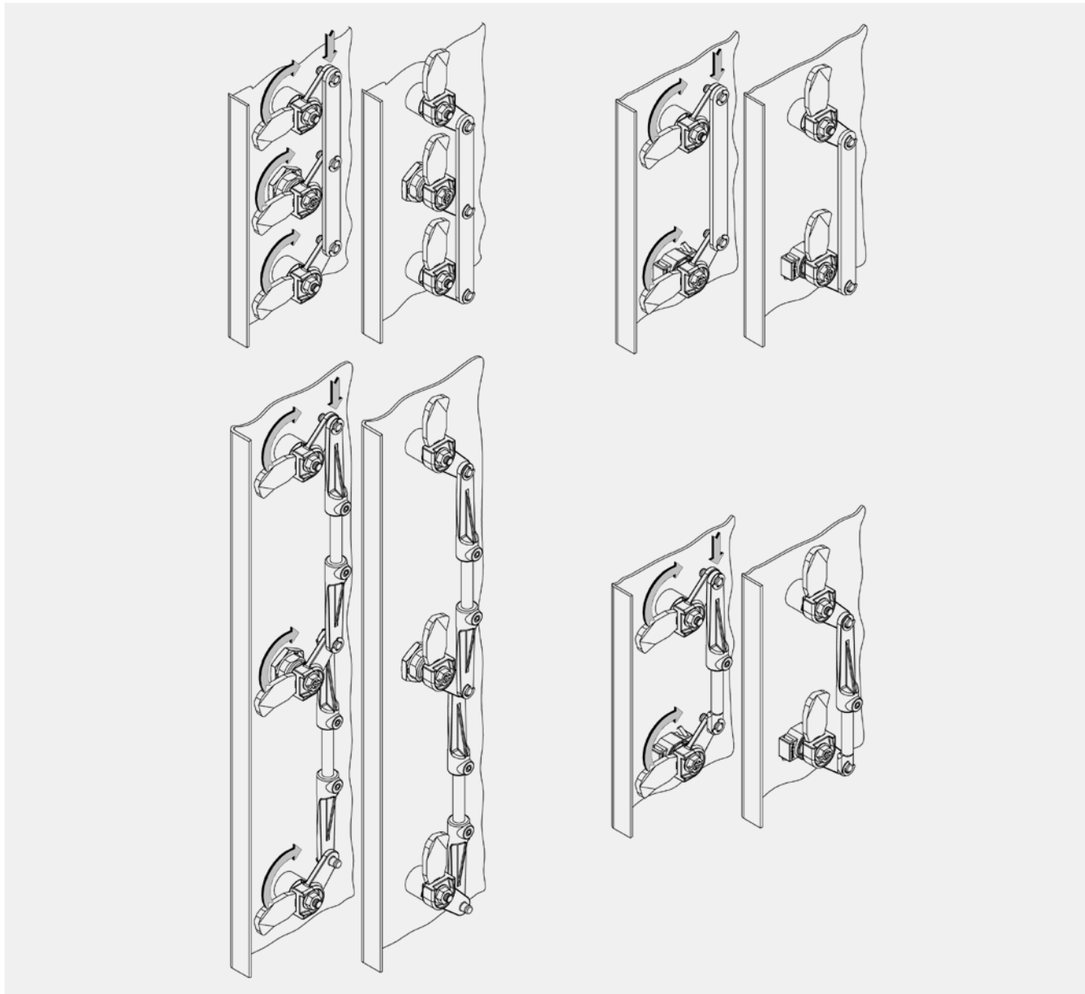

Adapter and spacer

	Part Number	Name	Delivery Unit
a)	100-9033.00-00000	Cam adapter (incl. 2 c-clips)	10 pcs.
b)	200-2811.35-00000	Spacer	10 pcs.

	Accessories
d)	154, 292 1-102 **Cams L35/45 Steel**
d)	161 1-261 **Cams with Ramp**
d)	161 1-262 **Cams variable**
e)+f)	3-221 **Rods for Compression Rod Latch**
f)	179, 283 201-0112.00-Lxxmm **Round rod, variable length**
f)	179, 283 201-0111.00-Lxxmm **Round rod, variable length**
f)	179, 283 201-0110.00-00000 **Round rod 1200mm**
f)	179, 283 201-0109.00-00000 **Round rod 1100mm**
f)	179, 283 201-0108.00-00000 **Round rod 1000mm**
f)	179, 283 201-0107.00-00000 **Round rod 900mm**
f)	179, 283 201-0106.00-00000 **Round rod 800mm**
f)	179, 283 201-0105.00-00000 **Round rod 700mm**
f)	179, 283 201-0104.00-00000 **Round rod 600mm**
f)	179, 283 201-0103.00-00000 **Round rod 500mm**
f)	179, 283 201-0102.00-00000 **Round rod 400mm**

	Function extension
c)	191 200-9637.00-00000 **Adapter for round rods**

90° Redirect for Multi-Point Locking System [1-263.01]

Advantages

- Using for optimal latchting point.
- For quarter-turns with insert GL 18mm and swinghandles for round rods Ø8mm.
- RH and LH version.

Materials

- **Redirect:** zinc die, zinc plated
- **C-clip and setscrew:** steel, zinc plated

Remarks

1. cam position

2. on the back side of the redirect cam positon turned 90°

3. assembly spacer on weld-stud M6x32

c) adapter for round rods (must be ordered by using round rods)

d) H-dimension 18mm only for sheet thickness 2mm

f) for the use of flat rods please contact us

Attention: can only be used for straight cams.

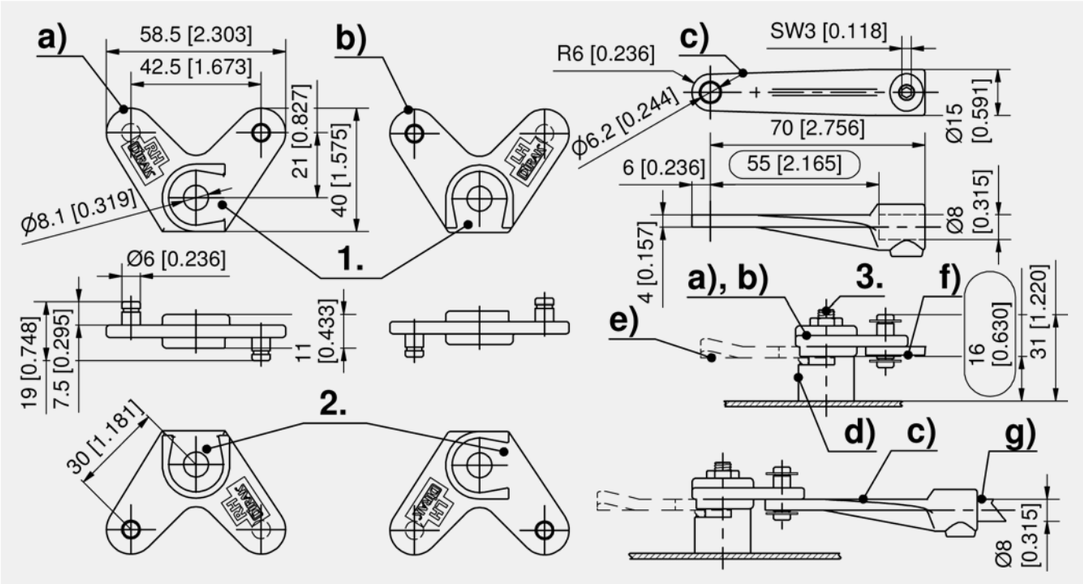

1-263.01

all product details on DIRAK.com

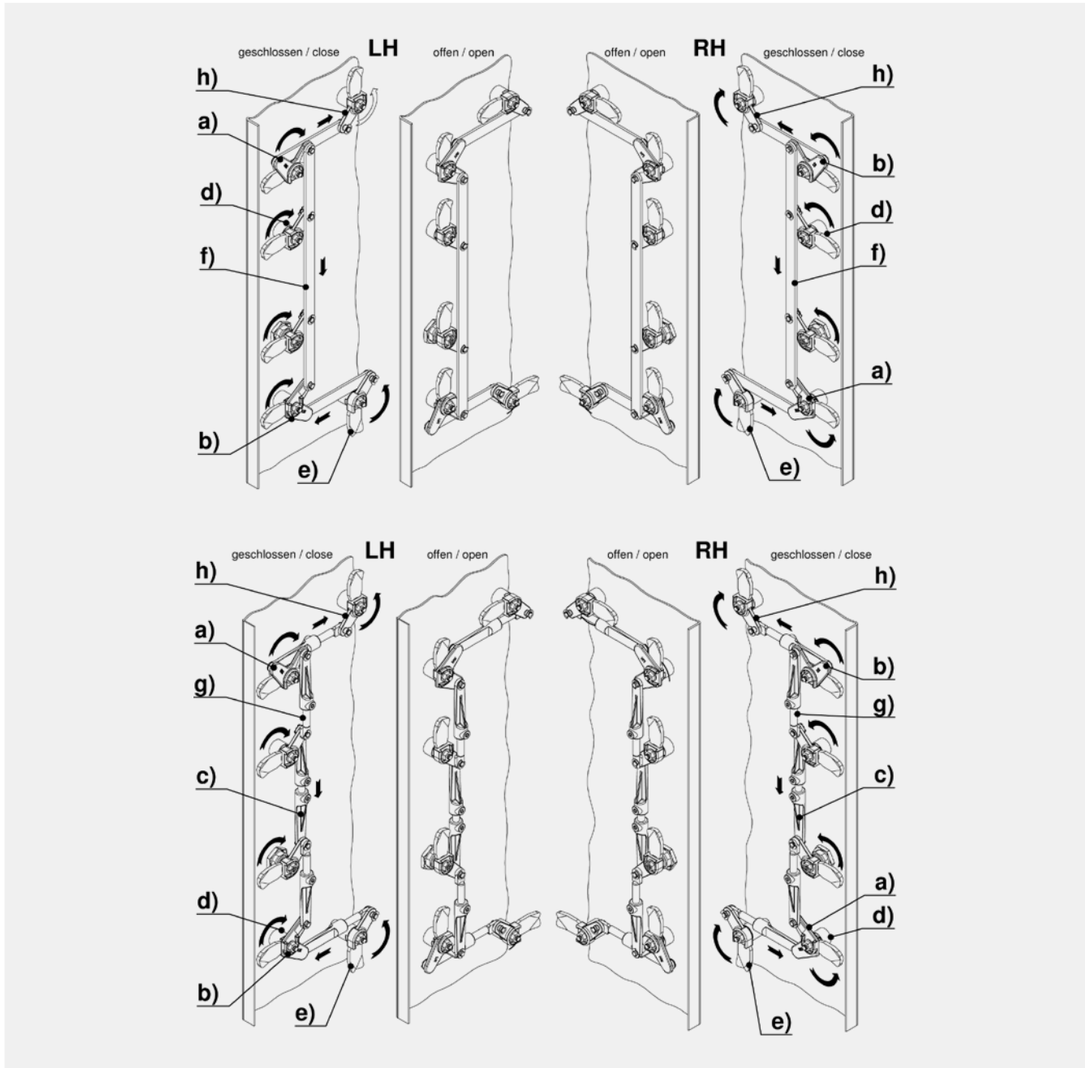

Redirect for multi-point locking system

	Part Number	Version	Installation position	Delivery Unit
a)	100-9613.00-00001	RH version	LH door top/RH door bottom	10 pcs.
b)	100-9613.00-00002	LH version	LH door bottom/RH door top	10 pcs.

Adapter for round rods

	Part Number	for round rod	Delivery Unit
c)	200-9637.00-00000	Ø8	10 pcs.

Accessories
e) 154, 292 200-0418.00-00000 **Cam**
e) 161 200-4018.00-00000 **Cam with ramp**
g) 179, 283 1-170 **Round Rods with Eye**
h) 189 100-9033.00-00000 **Cam adapter (incl. 2 c-clips)**

Specific accessories
d) 189 200-2811.35-00000 **Spacer**

Rod Latch for Quarter-Turns Pr20.1 L18 RS/FS [1-350]

Advantages

- Installation within the sealed area of enclosures.
- Rod latch applicable for round or flat rods.
- Applicable for quarter-turns with housing length 18mm.
- Dual rod holder.
- Quick assembly of the rods.
- RH / LH application.
- At 90° operation - stroke 20mm.
- At 120° operation - stroke 27.5mm (Use of cams without stop, the end stop is fixed by the rack).

Materials

Base plate: PA, black

Driving rods, pinon: zinc die, untreated

Washer: steel, zinc plated

Remarks

Mountable only with cam.

Use of negatively bended cams not possible.

Grounding of the quarter-turn with grounding nut possible.

1. stroke

2. Round rod 201-9006.00-Lxxmm **not** usable.

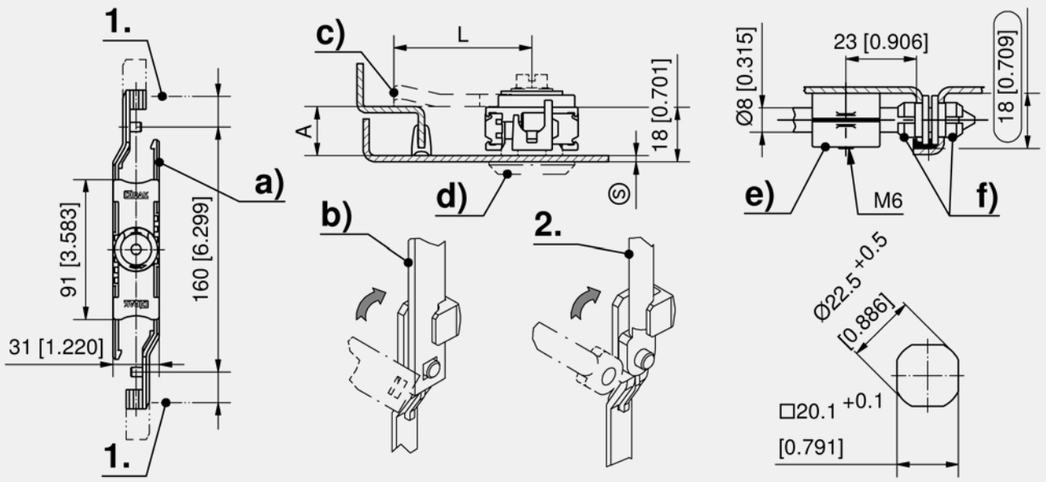

Formula for rods:
cutout in the door center

$$L = \frac{\text{clearance - 10mm [0.394] (tolerance) - Rod Latch System in retraced condition}}{2}$$

1-350
all product details on DIRAK.com

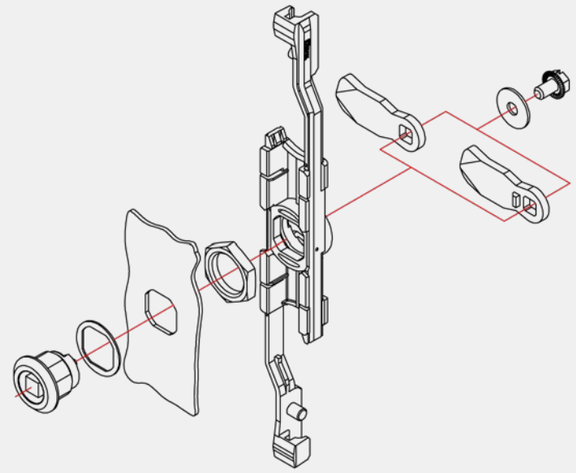

Rod latch for quarter-turns L18

	Part Number	Rod fastening	Installation type	Delivery Unit
a)	200-9947.00-00000	quick-fit	snap-fit	1 pc.

	Accessories
b) 367	3-160 **Flat Rod FS with Rollers**
b) 368	3-161 **Flat Rod FS**
c) 154, 292	1-102 **Cams L35/45 Steel**
76	1-100 **Quarter-Turn Pr20.1 L18**
75	1-100.01 **Quarter-Turn Pr20.1 L18**
378	3-910 **Rod Guide FS 23mm**
379	3-911 **Rod Guide FS 23mm**
179, 283	201-0111.00-Lxxmm **Round rod, variable length**
179, 283	201-0112.00-Lxxmm **Round rod, variable length**
179, 283	201-9021.00-Lxxmm **Round rod, variable length**
185, 289	1-192 **Rod Guides RS**
187, 291	1-193 **Rod Guide RS**
186, 290	1-190 **Rod Guides RS**
184, 288	1-191 **Height-adjustable Rod Guide RS**

Rod Latch with Quarter-Turn L12 Pr20.1 FS

[1-351]

Advantages

- For installation outside of the sealed area of enclosures.
- Space requirement inside of the door bending 18mm.
- Quarter-turn L12 included.
- Quick assembly of the flat rods.
- RH / LH application.
- 90° operation - stroke 20mm.
- Quarter-turn screw-on, rod latch snap-fit.

Materials

- **Base plate:** PA, black
- **Driving rods and pinon:** zinc die, untreated
- **Housing and insert:** zinc die, chrome plated or black
- **Washer:** Steel, zinc plated

Remarks

1. stroke
2. open state
3. closed state
4. grounding is possible with single-sided grounding nut of the quarter-turn
5. weld stud M6x18 mm, nut DIN439 M6, washer DIN125 6,5

Y. dual rollers

Z. rod in rod reception of rod latch

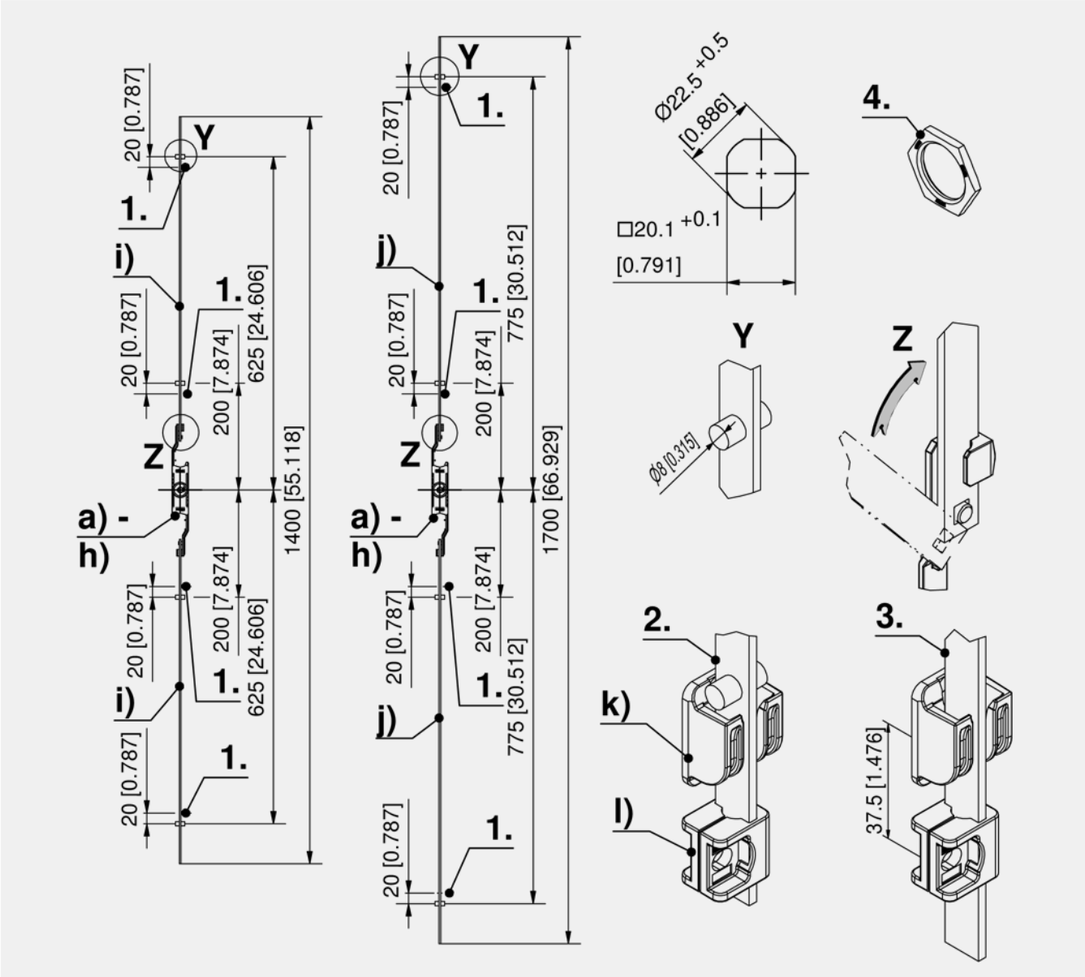

1-351

all product details on DIRAK.com

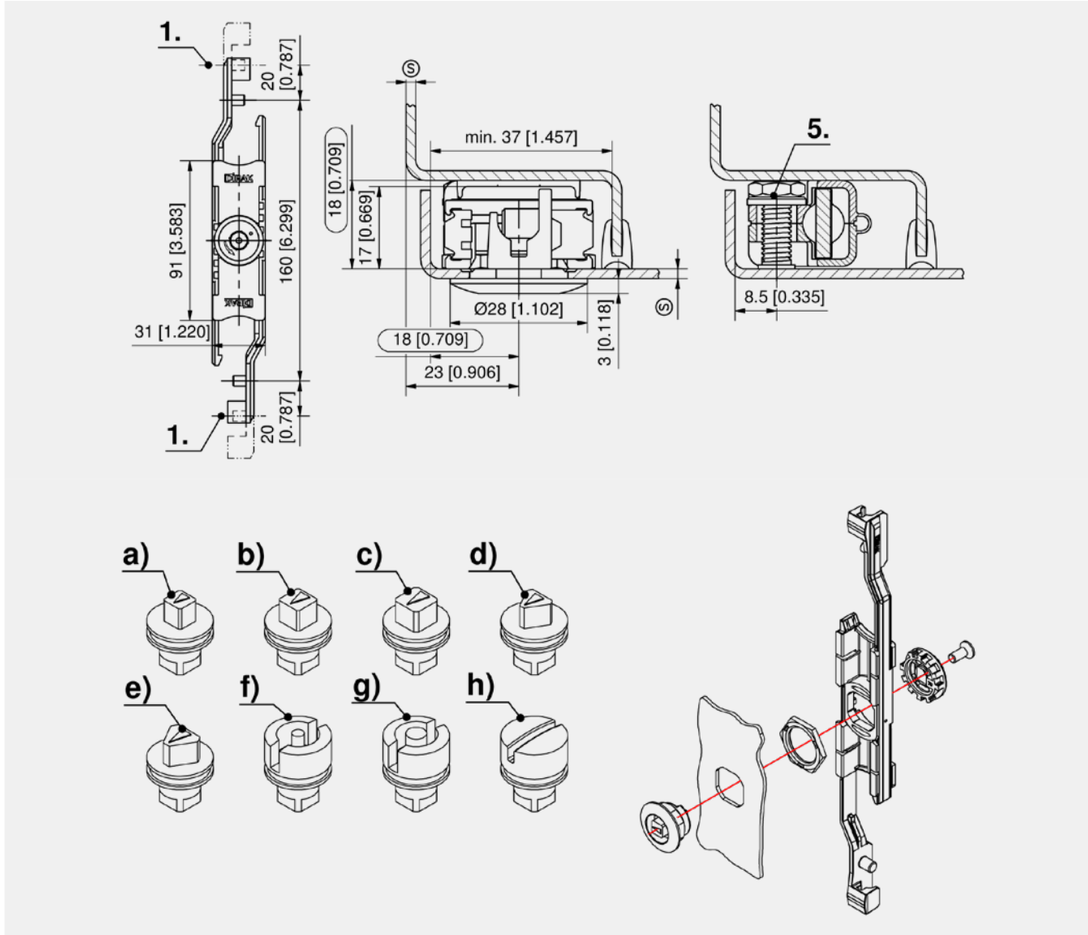

Rod latch with quarter-turn

	Part Number	Insert	Surface quarter-turn	Delivery Unit
a)	200-9948.00-SQ6CH	Square 6mm	chrome plated	1 pc.
b)	200-9948.00-SQ7CH	Square 7mm	chrome plated	1 pc.
c)	200-9948.00-SQ8CH	Square 8mm	chrome plated	1 pc.
d)	200-9948.00-TR7CH	Triangular 7mm	chrome plated	1 pc.
e)	200-9948.00-TR8CH	Triangular 8mm	chrome plated	1 pc.
f)	200-9948.00-DB3CH	Double bit 3mm pin	chrome plated	1 pc.
g)	200-9948.00-DB5CH	Double bit 5mm pin	chrome plated	1 pc.
h)	200-9948.00-SLOCH	Slotted 2x4mm	chrome plated	1 pc.
a)	200-9948.00-SQ6BL	Square 6mm	black	1 pc.
b)	200-9948.00-SQ7BL	Square 7mm	black	1 pc.
c)	200-9948.00-SQ8BL	Square 8mm	black	1 pc.
d)	200-9948.00-TR7BL	Triangular 7mm	black	1 pc.
e)	200-9948.00-TR8BL	Triangular 8mm	black	1 pc.
f)	200-9948.00-DB3BL	Double bit 3mm pin	black	1 pc.
g)	200-9948.00-DB5BL	Double bit 5mm pin	black	1 pc.
h)	200-9948.00-SLOBL	Slotted 2x4mm	black	1 pc.

Rods with dual rollers

Part Number	Door height Th	Locking points	Dual rollers A	Dual rollers B	Total dimension extended	Delivery Unit
208-9801.00-00000	1400 - 1700 mm	4 pcs.	200	625	1400	1 pc.
208-9802.00-00000	1700 - 2000 mm	4 pcs.	200	775	1700	1 pc.

	Specific accessories
197	208-1453.50-00000 **Dual Hook FS 18mm**
196	208-1528.54-00000 **Dual Rod Guide FS/RS 18mm**

Dual Rod Guide FS/RS 18mm

[3-904]

Advantages

- For flat rods 14x3mm.
- For round rods 8mm.
- Divided in two parts.

Materials

- **Rod guide:** PA, black

Remarks

For rod latch 1-351

Required space inside the bend 18mm

1. weld stud M6 x 18mm, nut DIN 439 M6, washer DIN 125 6,4

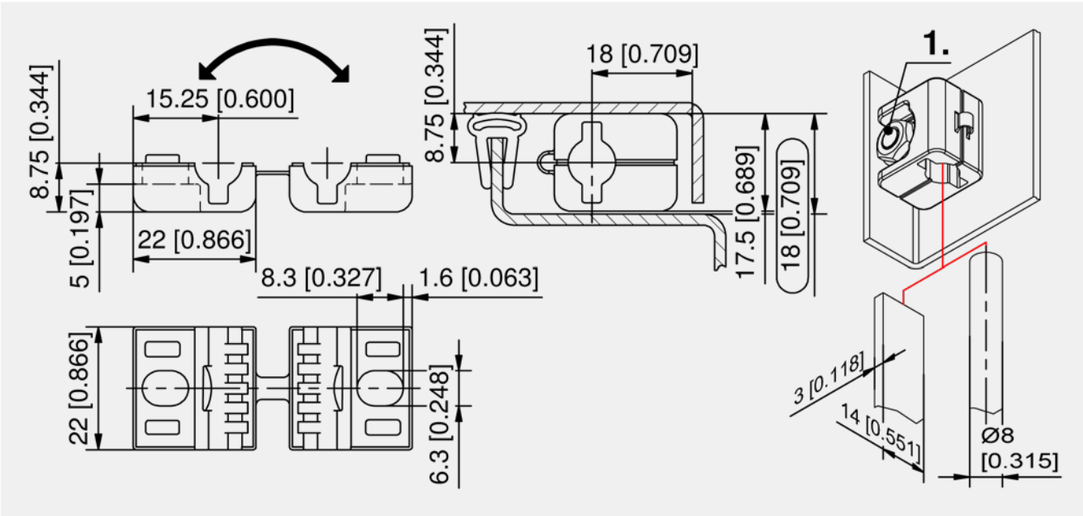

Rod guide FS/RS

Part Number	Fastening type	Installation type	Delivery Unit
208-1528.54-00000	M6	screw-on	1 pc.

Dual Hook FS 18mm

[3-905]

Advantages

- Dual hook for flat rods with dual rollers.

Materials

Dual hook: PA, black

Remarks

For rod latch 1-351

Required space inside the bend 18mm

1. flat rod
2. dual rollers
3. stroke 24mm

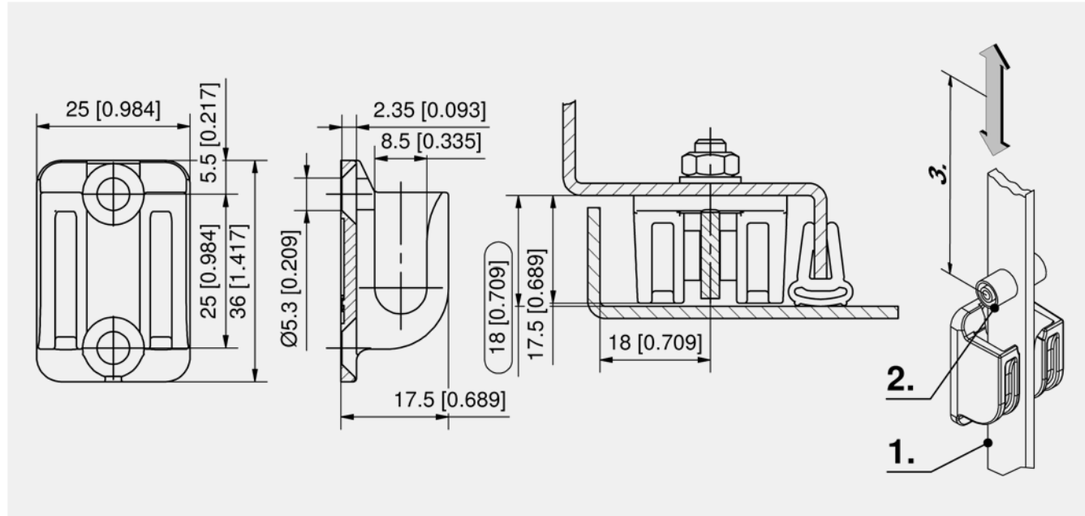

Dual hook FS

Part Number	Version	Installation type	Delivery Unit
208-1453.50-00000	with countersunk holes for M5	screw-on	1 pc.

3-904
all product details on DIRAK.com

all product details on DIRAK.com
3-905

Pressure-Tight Fitting for 24mm Stroke FS

[1-451]

RoHS
WEEE

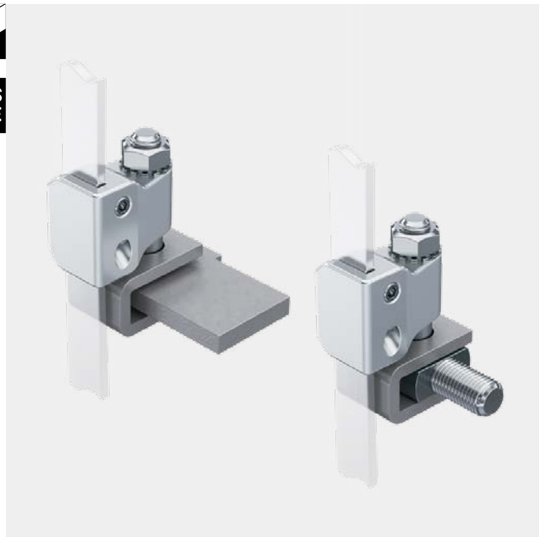

Advantages

- Fitting for pressure-tight doors.
- Positive-locking between fitting and flat rod 14x3mm.
- For high and medium voltage distribution boards.
- Suitable with standard rod latches.

Materials

- **Connector:** zinc die, untreated
- **Set screws, locking pin, serrated lock washer and hexagon nut:** steel, zinc plated
- **U-bracket:** steel, untreated

Remarks

U-bracket weld-on included with delivery

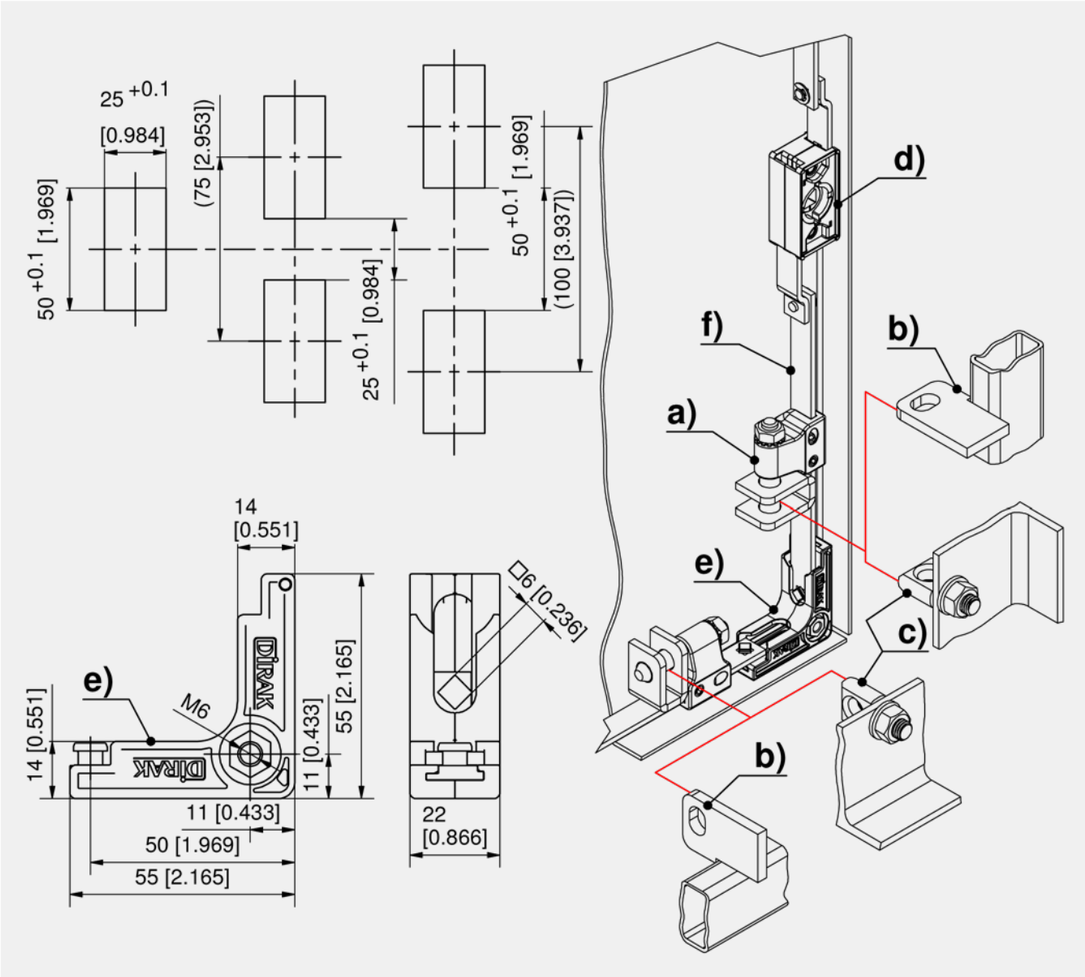

1-451

all product details
on DIRAK.com

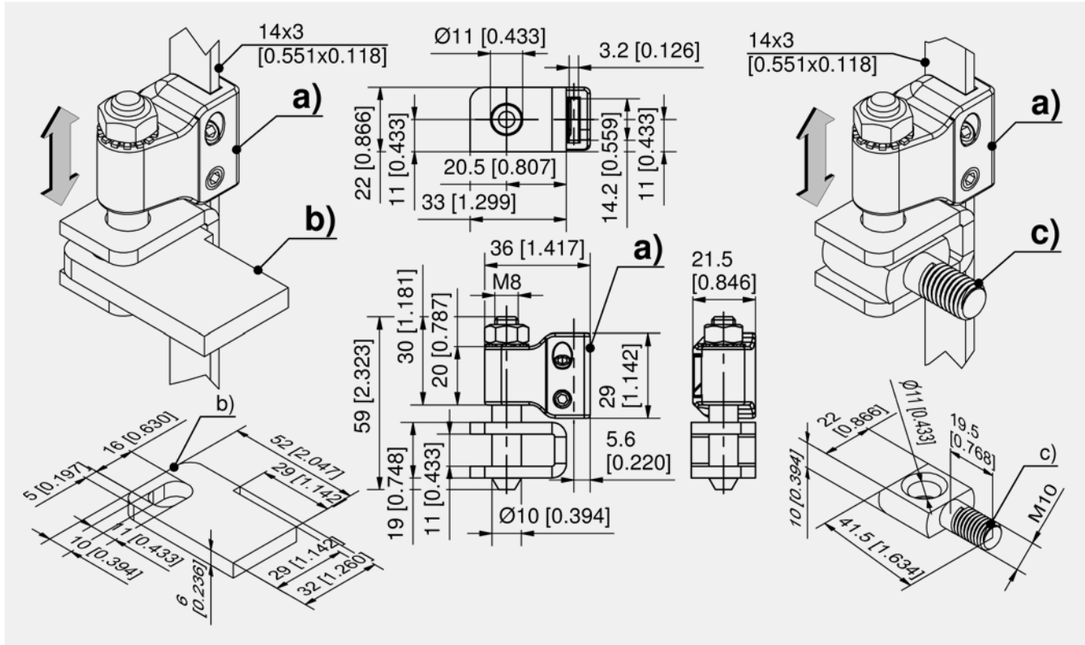

Pressure-tight fitting

	Part Number	Installation type	Delivery Unit
a)	215-9201.00-00000	screw-on	1 pc.

Frame-part eye

	Part Number	Thread size	Installation type	Delivery Unit
b)	215-0213.00-00000		weld-on	1 pc.
c)	215-0406.00-00000	M10	screw-on	1 pc.

	Accessories
d)	352 3-100 **Rod Latch RS/FS PrA**
d)	360 3-130 **Rod Latch FS PrC**
e)	372 3-166 **90° Redirect FS**
f)	368 3-161 **Flat Rod FS**
	378 3-910 **Rod Guide FS 23mm**
	379 3-911 **Rod Guide FS 23mm**

Pressure-Tight Fitting for 18mm Stroke RS

[1-450]

RoHS
WEEE

Advantages

- Fitting for pressure-tight doors.
- For high and medium voltage distribution boards.
- Controlled by a rod latch 18mm stroke.
- For insert, T- and L-handle and swinghandle RS 130.
- Suitable for round rods Ø 8mm.
- Redirect usable.

Materials

- **Locking pin, fixing pieces, redirect, spacer, carrier, securing nut, c-clip, frame-part eye screw-on:** steel, zinc plated
- **Connector:** zinc die
- **Weld-on U-bracket, frame-part eye weld-on:** steel, untreated

Remarks

1. stroke

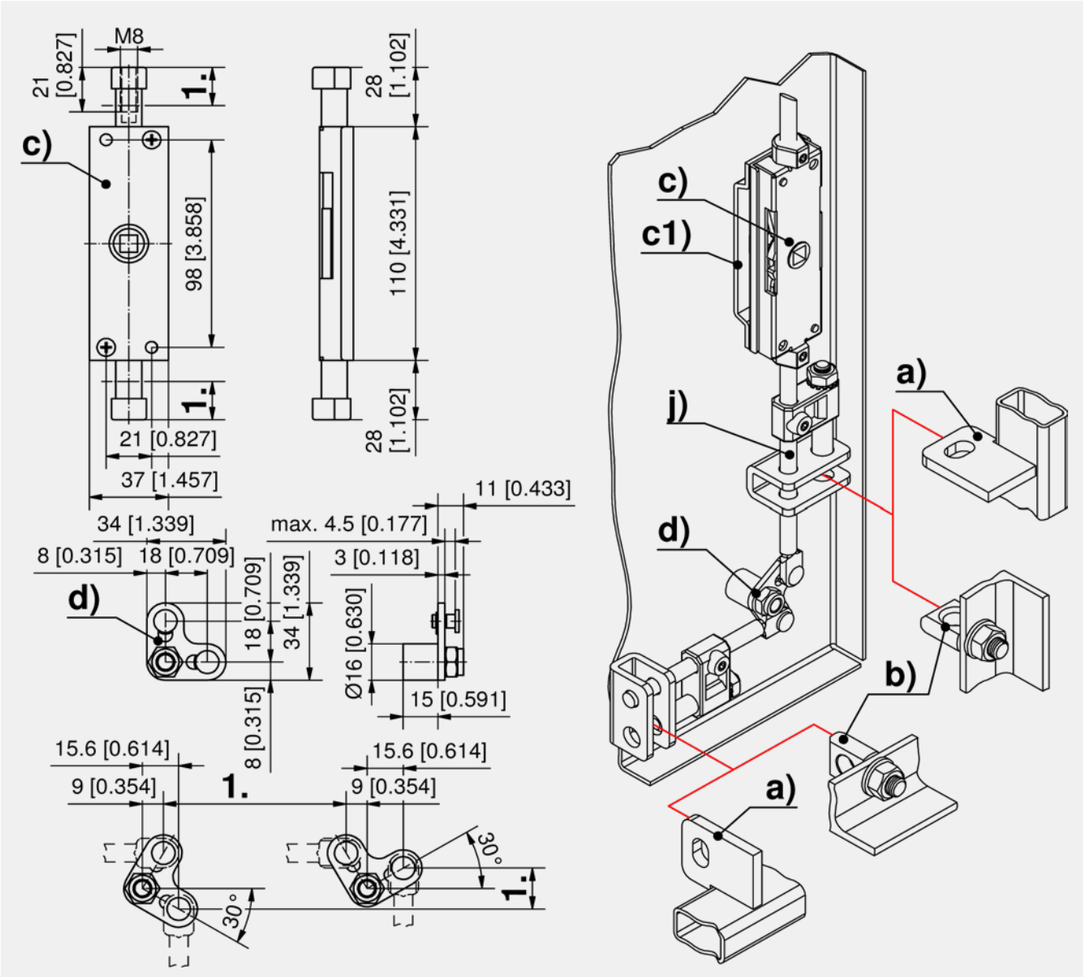

1-450

all product details
on DIRAK.com

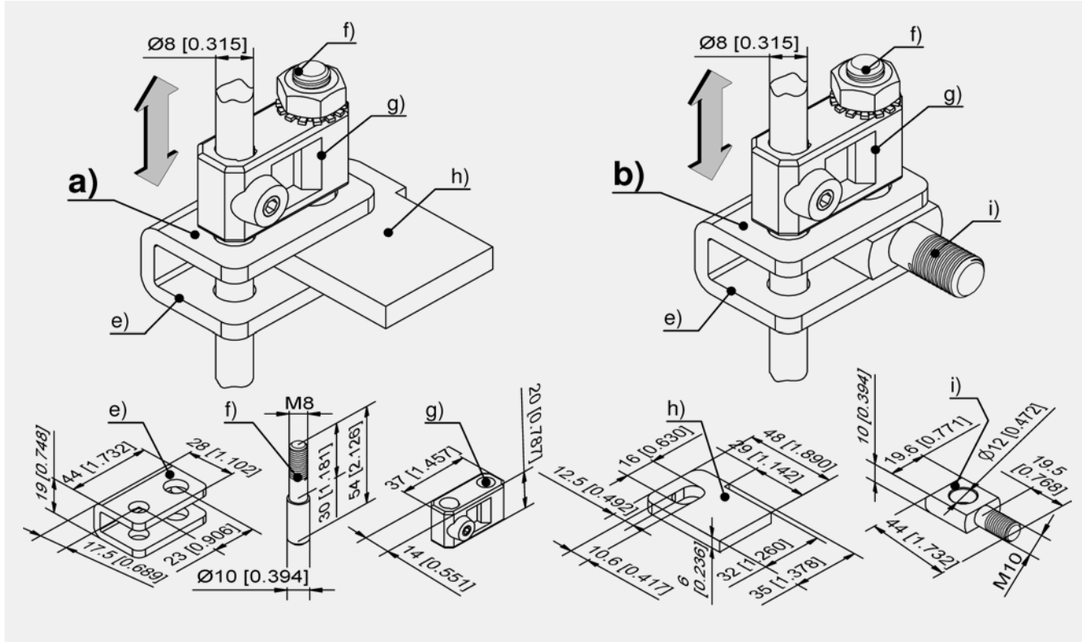

Pressure-tight fitting complete

	Part Number	Installation type	Delivery Unit
a)	215-9001.00-00000	weld-on	1 pc.
b)	215-9002.00-00000	screw-on	1 pc.

Single parts

	Part Number	Name	Material	Surface	Fastening type	Delivery Unit
d)	215-9005.00-00000	Redirect for pressure-tight door furniture	steel	zinc plated	screw-on	1 pc.
e)	215-0101.00-00000	U-bracket, series 235	steel	untreated	weld-on	1 pc.
f)	215-0501.00-00000	Locking bolt	steel	zinc plated	screw-on	1 pc.
g)	215-9101.00-00000	Connector for housing	zinc die	untreated	screw-on	1 pc.
h)	215-0201.00-00000	Frame-part eye	steel	untreated	weld-on	1 pc.
i)	215-0401.00-00000	Frame-part eye	steel	zinc plated	screw-on	1 pc.

	Accessories
212	1-430.01 **Escutcheon and Inserts**

	Specific accessories
a); c)	206 235-9013.00-00000 **Rod Latch, RH version**
a); c)	206 235-9014.00-00000 **Rod Latch, LH version**
c1)	205, 206 235-1001.00-00000 **Lock support A20**
j)	307 201-0801.00-01000 **Round rod, M8 x 1000mm**

Pressure-Tight Fitting for 24mm Stroke RS [1-450.01]

RoHS
WEEE

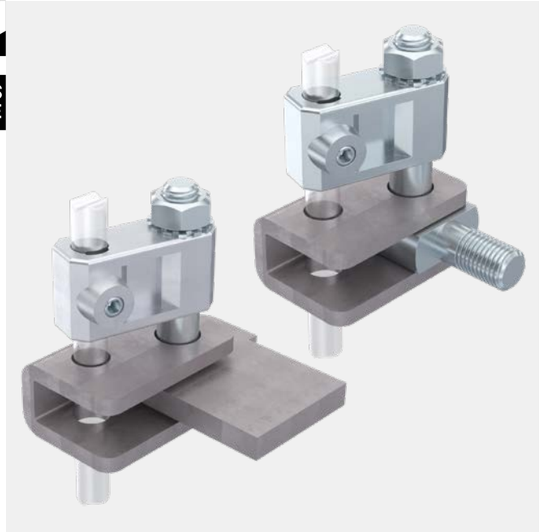

Advantages

- Fitting for pressure-tight doors.
- For high and medium voltage distribution boards.
- Controlled with rod latch 24mm stroke.
- For insert, T- and L-handle and swinghandle.
- Suitable for round rods Ø 8mm.

Materials

- **Locking pin and fixing pieces:** steel, zinc plated
- **Weld-on U-bracket:** steel, untreated

Remarks

1. stroke

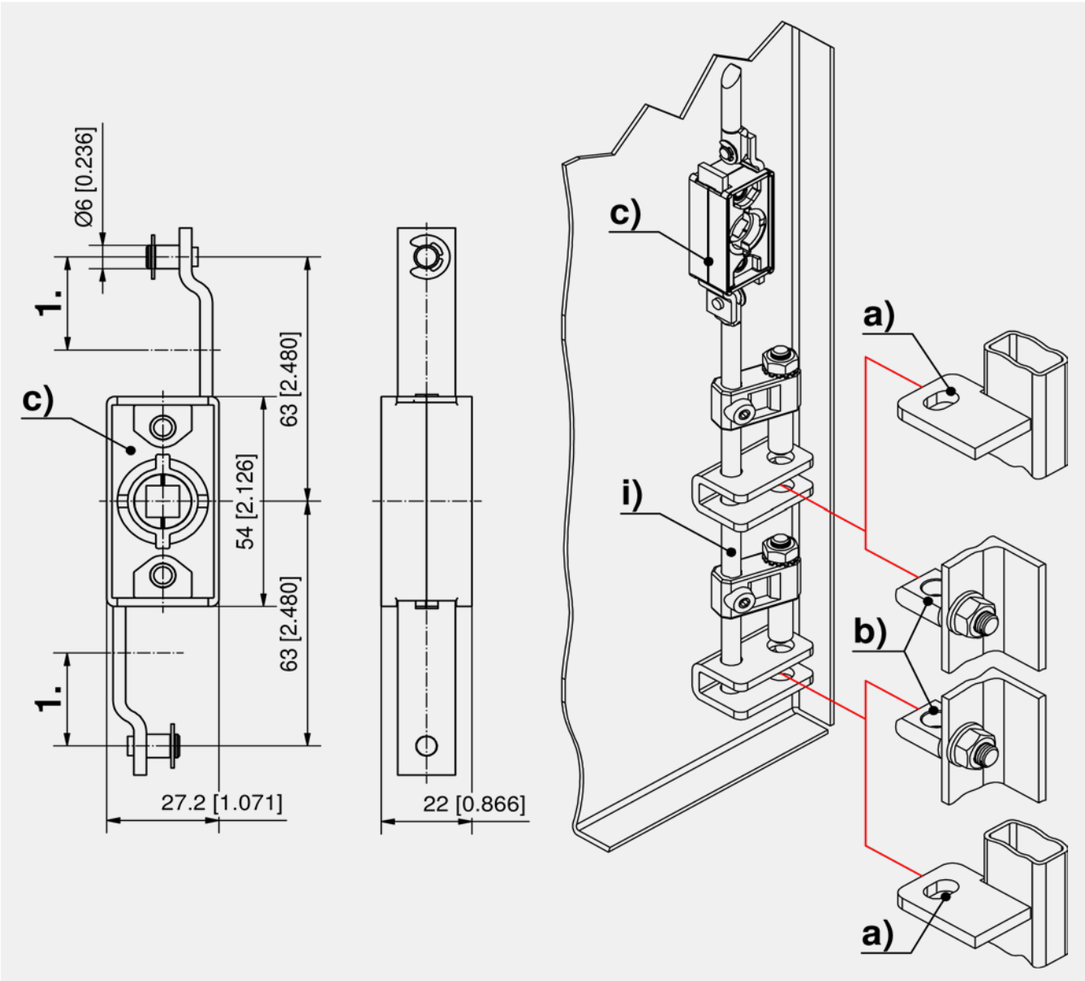

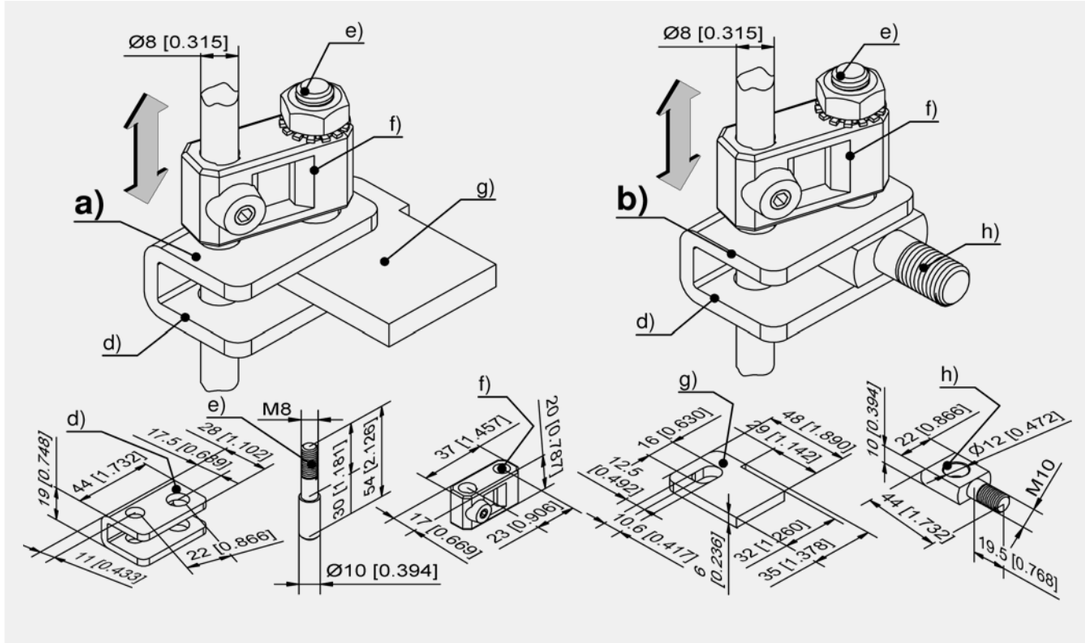

Pressure-tight fitting complete

	Part Number	Installation type	Delivery Unit
a)	215-9003.00-00000	weld-on	1 pc.
b)	215-9004.00-00000	screw-on	1 pc.

Single parts

	Part Number	Name	Fastening type	Delivery Unit
d)	215-0101.00-00001	U-bracket, series 208	weld-on	1 pc.

	Accessories
c)	353 208-9001.00-00000 **Rod latch**
e)	201 215-0501.00-00000 **Locking bolt**
f)	201 215-9101.00-00000 **Connector for housing**
g)	201 215-0201.00-00000 **Frame-part eye**
h)	201 215-0401.00-00000 **Frame-part eye**
i)	179, 283 1-170 **Round Rods with Eye**
i)	180, 284 1-180 **Round Rods for Adapter**
	318 3-101 **Escutcheons and Inserts**

1-450.01

all product details
on DIRAK.com

3-Point Rod Latch RS

[1-400]

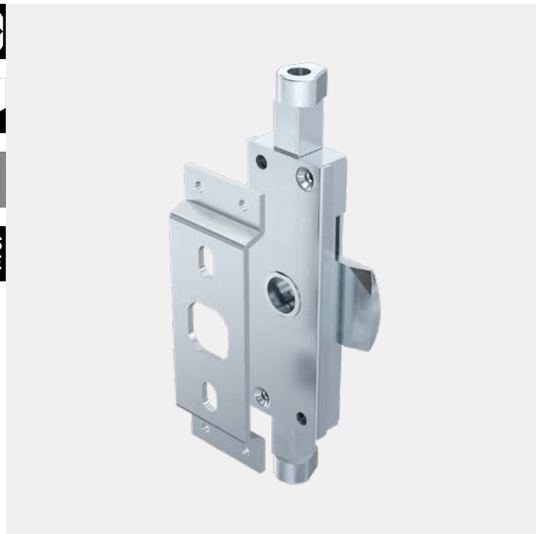

Advantages

- For quarter-turn cutout Pr20.1.
- For round rods Ø 8mm.
- Heavy duty version.
- RH and LH version.
- In combination with lock support for bending 20 or 26mm.

Materials

- **Rod latch:** steel, zinc plated and zinc die
- **Lock support:** steel, zinc plated

Remarks

1. stroke
2. for painted doors and bolted lock, an M6x8 weld-stud with nut is required for the earthing.
3. length
4. clearance

Escutcheon with insert PS 1-430.01.

T- and L-handles PS 1-430.

Swinghandles PS 2-300.

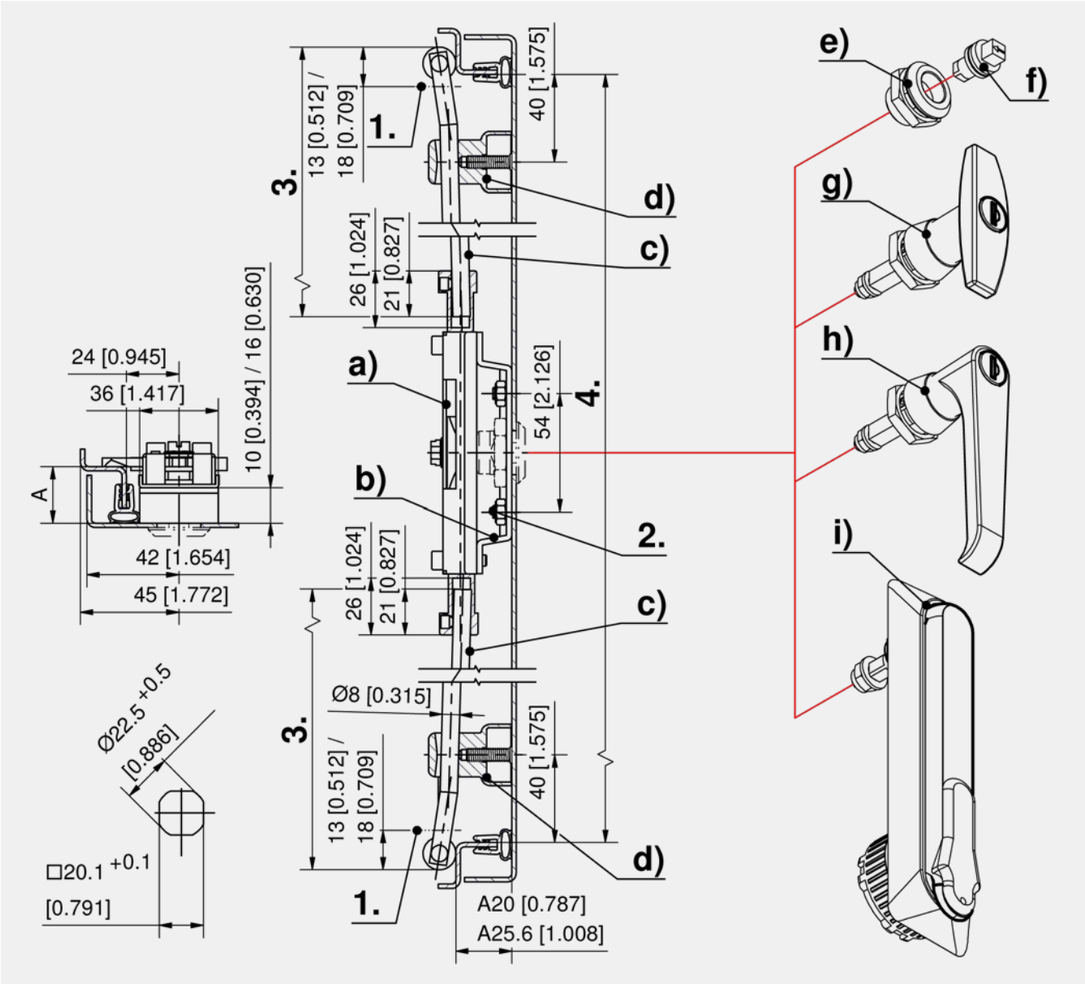

1-400

all product details on DIRAK.com

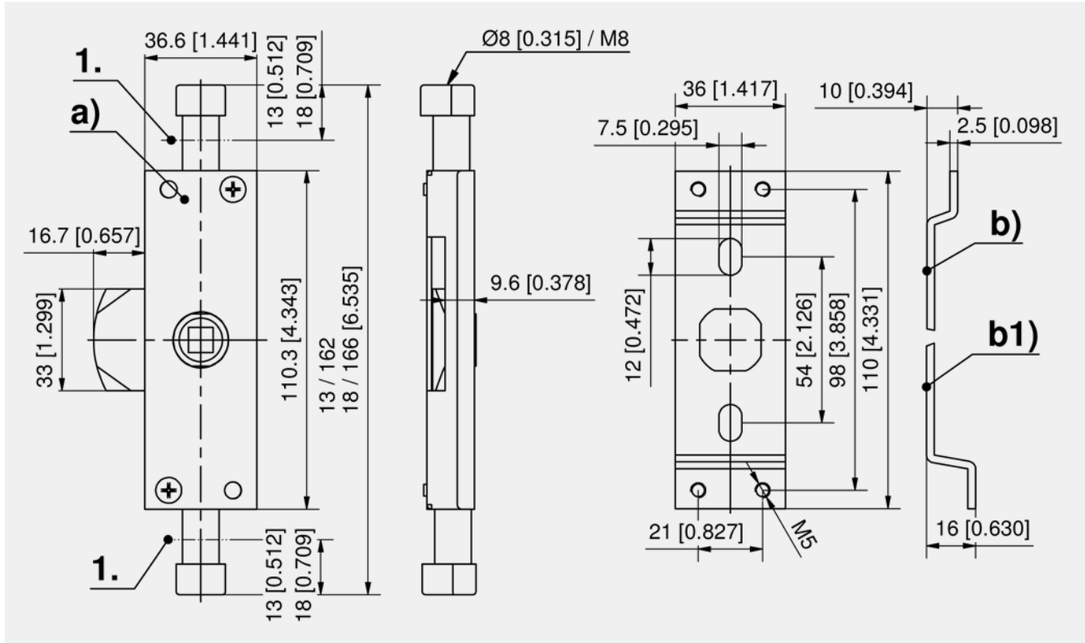

Rod latch for round rods

	Part Number	Version	Stroke	Threaded size rod latch	Installation type	Delivery Unit
a)	235-9001.00-00000	RH version	13 mm		screw- / weld-on	1 pc.
a)	235-9002.00-00000	LH version	13 mm		screw- / weld-on	1 pc.
a)	235-9003.00-00000	RH version	18 mm		screw- / weld-on	1 pc.
a)	235-9004.00-00000	LH version	18 mm		screw- / weld-on	1 pc.
a)	235-9005.00-00000	RH version	13 mm	M8	screw- / weld-on	1 pc.
a)	235-9006.00-00000	LH version	13 mm	M8	screw- / weld-on	1 pc.
a)	235-9007.00-00000	RH version	18 mm	M8	screw- / weld-on	1 pc.
a)	235-9008.00-00000	LH version	18 mm	M8	screw- / weld-on	1 pc.

Lock support for rod latch

	Part Number	Name	Delivery Unit
b)	235-1001.00-00000	Lock support A20	1 pc.
b1)	235-1002.00-00000	Lock support A26	1 pc.

	Accessories
c)	307 201-0801.00-01000 **Round rod, M8 x 1000mm**
c)	180, 284 1-180 **Round Rods for Adapter**
d)	186, 290 1-190 **Rod Guides RS**
d)	184, 288 1-191 **Height-adjustable Rod Guide RS**
d)	185, 289 1-192 **Rod Guides RS**
d)	187, 291 1-193 **Rod Guide RS**
e)-f)	212 1-430.01 **Escutcheon and Inserts**
g)-h)	210 1-430 **T- and L-Handles for Rod Latches**
i)	268 2-300 **Swinghandle RS 130 for Rod Latch**
	203-0605.03-00000 **Bushing Ø8**

2-Point Rod Latch RS

[1-400.01]

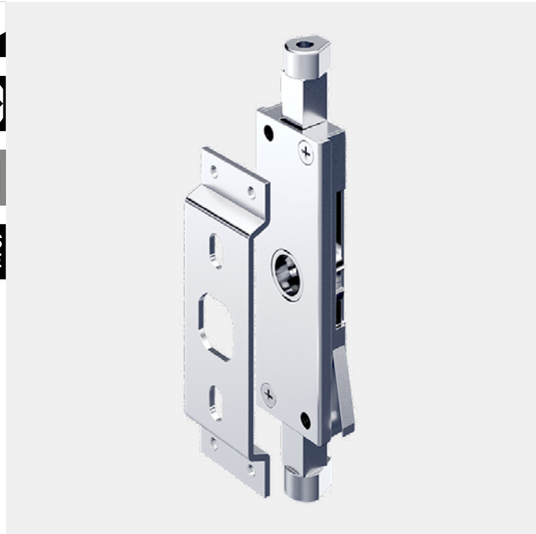

Advantages

- For quarter-turns cutout Pr20.1.
- For round rods threaded connection M8.
- Heavy duty.
- RH and LH version.
- In combination with lock support for bending 20 or 26mm.

Materials

- **Rod latch:** steel, zinc plated and zinc die
- **Lock support:** steel, zinc plated

Remarks

Escutcheon with insert PS 1-430.01.

T- and L-handle PS 1-430.

Swinghandle PS 2-300.

1. stroke 18mm

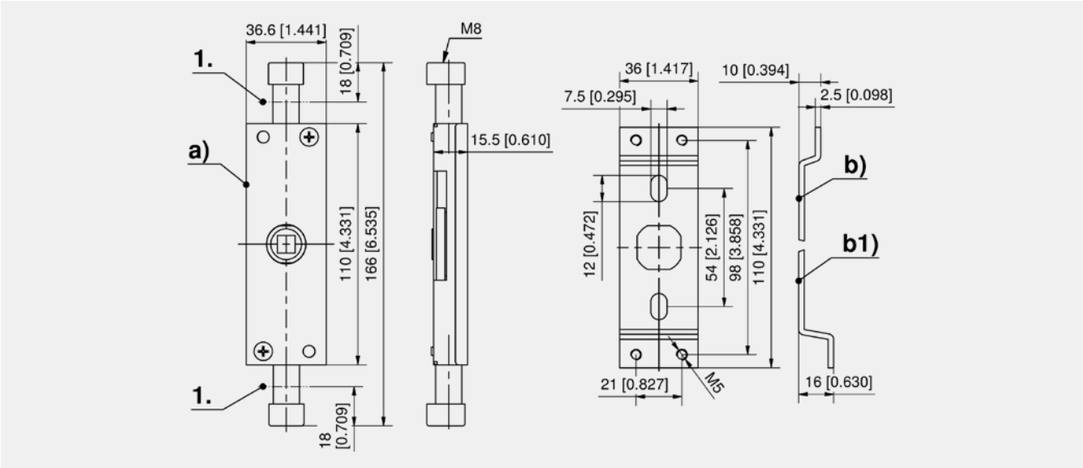

Rod latch for round rods

	Part Number	Rod diameter Ø	Version	Installation type	Delivery Unit
a)	235-9013.00-00000	8mm	RH version	screw-on	1 pc.
a)	235-9014.00-00000	8mm	LH version	screw-on	1 pc.

Lock support for rod latch

	Part Number	Name	Delivery Unit
b)	235-1001.00-00000	Lock support A20	1 pc.
b1)	235-1002.00-00000	Lock support A26	1 pc.

Accessories
186, 290 1-190 **Rod Guides RS**
184, 288 1-191 **Height-adjustable Rod Guide RS**
185, 289 1-192 **Rod Guides RS**
187, 291 1-193 **Rod Guide RS**
210 1-430 **T- and L-Handles for Rod Latches**
212 1-430.01 **Escutcheon and Inserts**
200 1-450 **Pressure-Tight Fitting for 18mm Stroke**
268 2-300 **Swinghandle RS 130 for Rod Latch**
203-0605.03-00000 **Bushing Ø8**
201-0801.00-01000 **Round rod, M8 x 1000mm**

1-400.01
all product details on DIRAK.com

2-Point Rod Latch RS

[1-410]

Advantages

- For cutout Pr20.1.
- For rods with thread M8/M10.
- Closing rotation 180°.
- RH and LH version.
- In combination with lock support for bending 20 or 26mm.

Materials

- **Housing:** steel, zinc plated
- **Gear and connectors:** zinc die, chrome plated

Remarks

(S) Door-thickness 1.5 - 2.5mm

1. stroke 31.4mm

2. for painted doors and bolted lock, an M6 x 8 weld stud with nut is required for the earthing.

Escutcheon with insert PS 1-430.01.

T- und L-handles PS 1-430.

Swinghandles RS 130 see PS 2-300.

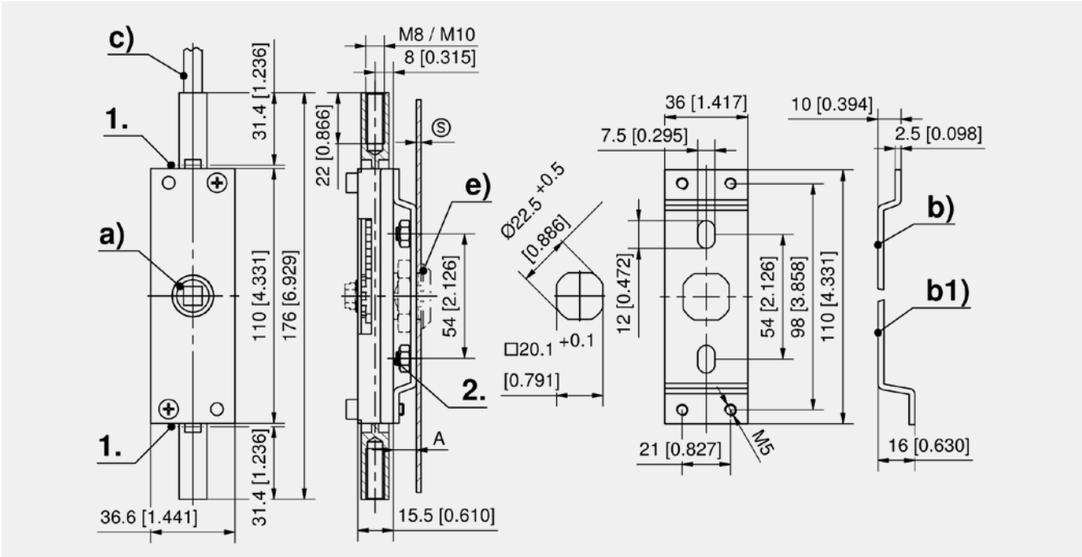

Rod latch for round rods

	Part Number	Rod diameter Ø	Version	Installation type	Delivery Unit
a)	235-9009.00-00000	8 mm	RH version	screw-on	1 pc.
a)	235-9010.00-00000	8 mm	LH version	screw-on	1 pc.
a)	235-9011.00-00000	10 mm	RH version	screw-on	1 pc.
a)	235-9012.00-00000	10 mm	LH version	screw-on	1 pc.

Accessories
b) 205, 206 235-1001.00-00000 **Lock support A20**
b1) 205, 206 235-1002.00-00000 **Lock support A26**
d) 186, 290 1-190 **Rod Guides RS**
d) 184, 288 1-191 **Height-adjustable Rod Guide RS**
d) 185, 289 1-192 **Rod Guides RS**
d) 187, 291 1-193 **Rod Guide RS**
210 1-430 **T- and L-Handles for Rod Latches**
212 1-430.01 **Escutcheon and Inserts**
268 2-300 **Swinghandle RS 130 for Rod Latch**
203-0605.03-00000 **Bushing Ø8**
203-0606.03-00000 **Bushing Ø10**

Specific accessories
c) 307 201-0801.00-01000 **Round rod, M8 x 1000mm**
c) 307 201-1001.00-01000 **Round rod, M10 x 1000mm**

all product details on DIRAK.com
1-410

Rod Latch for Profile Cylinder

[1-405]

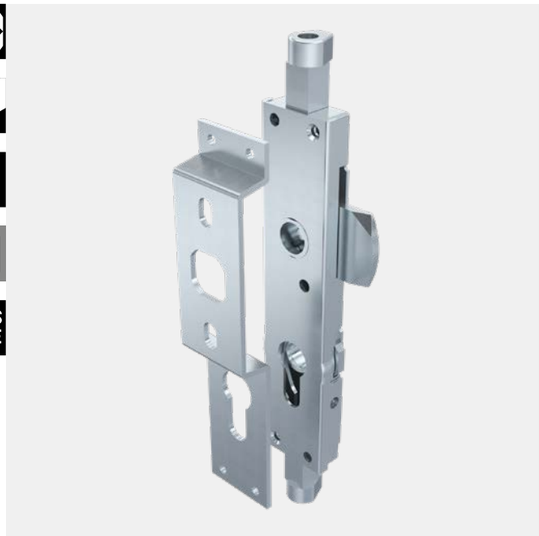

Advantages

- For cutout Pr20.1 and profile cylinder.
- For round rods Ø 8mm.
- Heavy duty version.
- RH and LH version.
- In combination with lock support for 20 or 26mm bending.
- **Function:** by turning the key in the profile cylinder, the insert or handle is released. After release, the rod latch can be opened or closed by the insert or the handle. The key in the profile cylinder can only be removed in the locked state.

Materials

- **Rod latch:** steel, zinc plated and zinc die
- **Lock support:** steel, zinc plated

Remarks

(S) 1.5 - 2.5mm

1. stroke 18mm

2. for painted doors and bolted lock, an M6x8 weld stud with nut is required for the earthing.

Escutcheon with insert PS 1-430.01.

T-handles PS 1-430.

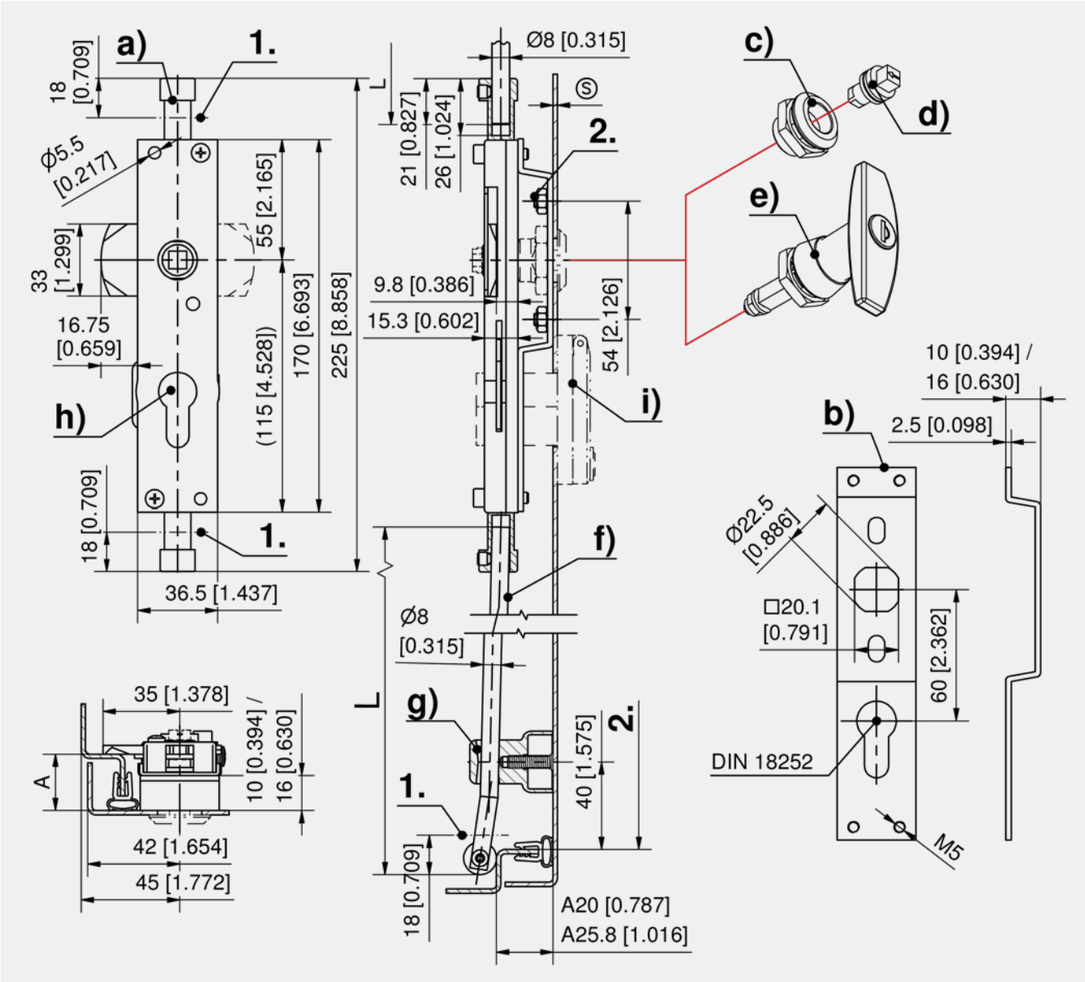

Rod latch for insert and profile cylinder

	Part Number	Version	Installation type	Delivery Unit
a)	235-9401.00-00000	RH version	screw- / weld-on	1 pc.
a)	235-9402.00-00000	LH version	screw- / weld-on	1 pc.

Lock support

	Part Number	Name	Delivery Unit
b)	235-1006.00-00000	Lock support A26	1 pc.
b)	235-1005.00-00000	Lock support A20	1 pc.

	Accessories
c)-d)	212 1-430.01 **Escutcheon and Inserts**
e)	210 1-430 **T- and L-Handles for Rod Latches**
f)	180, 284 1-180 **Round Rods for Adapter**
g)	186, 290 1-190 **Rod Guides RS**
g)	184, 288 1-191 **Height-adjustable Rod Guide RS**
g)	185, 289 1-192 **Rod Guides RS**
g)	187, 291 1-193 **Rod Guide RS**
h)	304, 388 211-9003.00-00000 **DIRAK Profile-cylinder**
h)	304, 388 211-9004.00-00000 **DIRAK Profile-cylinder**
i)	425 6-115 **Polyamide Lock Cover**
	203-0605.03-00000 **Bushing Ø8**

1-405

all product details on DIRAK.com

T- and L-Handles for Rod Latches

[1-430]

Advantages

- RH / LH application.
- IP65 according to DIN EN 60529 (optional).

Materials

- **Handle:** zinc die, chrome plated or black
- **Square pin:** steel, zinc plated
- **Bezel:** zinc die, chrome plated

Remarks

(S) Door-thickness max. 4mm

Please configure the handles with the rod latch 1-400, 1-405, 1-410 and 1-415.

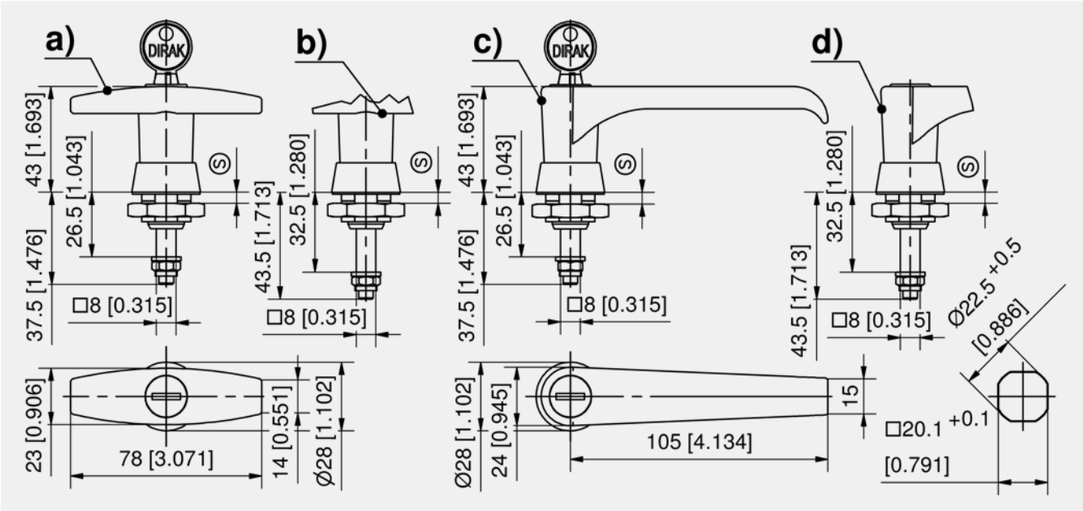

T-handle, chrome plated

	Part Number	for rod latch	Latching type	Delivery Unit
a)	235-9501.00-00000	A20		1 pc.
b)	235-9502.00-00000	A26		1 pc.
a)	235-9505.00-00000	A20	keyed alike DIRAK 1333	1 pc.
b)	235-9506.00-00000	A26	keyed alike DIRAK 1333	1 pc.
a)	535-9505.00-00000	A20	keyed alike DS200	1 pc.
b)	535-9506.00-00000	A26	keyed alike DS200	1 pc.
a)	235-9510.00-00000	A20	keyed different	1 pc.
b)	235-9511.00-00000	A26	keyed different	1 pc.
a)	501-9505.00-00000	A20	PAGODA keyed alike 1991	1 pc.
b)	501-9506.00-00000	A26	PAGODA keyed alike 1991	1 pc.
a)	501-9510.00-00000	A20	PAGODA keyed different	1 pc.
b)	501-9511.00-00000	A26	PAGODA keyed different	1 pc.

T-handle, black

	Part Number	for rod latch	Latching type	Delivery Unit
a)	235-9503.00-00000	A20		1 pc.
b)	235-9504.00-00000	A26		1 pc.
a)	235-9507.00-00000	A20	keyed alike DIRAK 1333	1 pc.
b)	235-9508.00-00000	A26	keyed alike DIRAK 1333	1 pc.
a)	235-9512.00-00000	A20	keyed different	1 pc.
b)	235-9513.00-00000	A26	keyed different	1 pc.
a)	501-9507.00-00000	A20	PAGODA keyed alike 1991	1 pc.
b)	501-9508.00-00000	A26	PAGODA keyed alike 1991	1 pc.
a)	501-9512.00-00000	A20	PAGODA keyed different	1 pc.
b)	501-9513.00-00000	A26	PAGODA keyed different	1 pc.

L-handle, chrome plated

	Part Number	for rod latch	Latching type	Delivery Unit
c)	235-9601.00-00000	A20		1 pc.
d)	235-9602.00-00000	A26		1 pc.
c)	235-9605.00-00000	A20	keyed alike DIRAK 1333	1 pc.
d)	235-9606.00-00000	A26	keyed alike DIRAK 1333	1 pc.
c)	535-9605.00-00000	A20	keyed alike DS200	1 pc.
d)	535-9606.00-00000	A26	keyed alike DS200	1 pc.
c)	235-9610.00-00000	A20	keyed different	1 pc.
d)	235-9611.00-00000	A26	keyed different	1 pc.
c)	501-9605.00-00000	A20	PAGODA keyed alike 1991	1 pc.
d)	501-9606.00-00000	A26	PAGODA keyed alike 1991	1 pc.

L-handle, black

	Part Number	for rod latch	Latching type	Delivery Unit
c)	235-9603.00-00000	A20		1 pc.
d)	235-9604.00-00000	A26		1 pc.
c)	235-9607.00-00000	A20	keyed alike DIRAK 1333	1 pc.
d)	235-9608.00-00000	A26	keyed alike DIRAK 1333	1 pc.
c)	535-9607.00-00000	A20	keyed alike DS200	1 pc.
d)	535-9608.00-00000	A26	keyed alike DS200	1 pc.
c)	235-9612.00-00000	A20	keyed different	1 pc.
d)	235-9613.00-00000	A26	keyed different	1 pc.

	Accessories
204	1-400 **Inserts for Rod Latches 235 series**
208	1-405 **Rod Latch for Profile Cylinder**
207	1-410 **2-Point Rod Latch RS**
476	1-415 **Sliding Door Latch**

	Function extension
	209-9002.00-00000 **Sealing kit IP65 for Quarter-Turns Pr20.1**

1-430

all product details on DIRAK.com

Escutcheon and Inserts

[1-430.01]

20

R L

IP 65

15 Nm

RoHS WEEE

Advantages

- Escutcheon a, a1: for all inserts.
- Escutcheon b, b1: according to DIN 43668, double bit key for cell- or cabinet doors of electrical switchgears. The double bit key is removable only in closed position. Insert: double bit with 3mm (f) oder 5mm pin (f1).
- RH / LH application.
- IP65 according to DIN EN 60529 (optional).

Materials

Escutcheon and insert: zinc die, black

Remarks

(S) Door-thickness max. 4mm

Please configure the escutcheon with insert and rod latch 1-400, 1-405, 1-410 and 1-415.

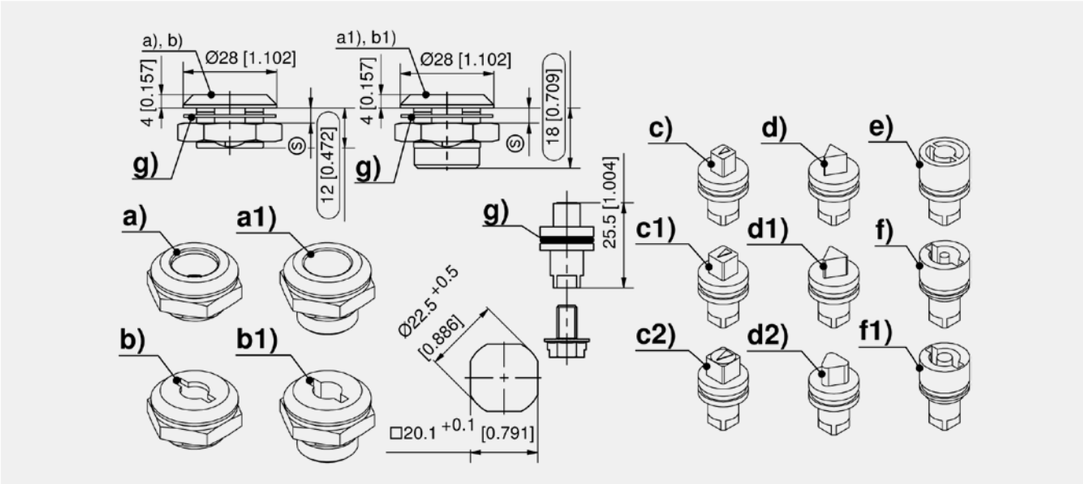

Escutcheon

	Part Number	Name	Delivery Unit
a)	235-9203.00-00000	Escutcheon A 20, universal	1 pc.
a1)	235-9204.00-00000	Escutcheon A 26, universal	1 pc.
b)	235-9201.00-00000	Escutcheon A 20 only for double bit	1 pc.
b1)	235-9202.00-00000	Escutcheon A 26, only for double bit	1 pc.

Inserts with screw M6x10

	Part Number	Insert	Delivery Unit
c)	235-9101.00-00000	Square 6mm	1 pc.
c1)	235-9102.00-00000	Square 7mm	1 pc.
c2)	235-9103.00-00000	Square 8mm	1 pc.
d)	235-9104.00-00000	Triangular 6.5mm CNOMO	1 pc.
d1)	235-9105.00-00000	Triangular 7mm	1 pc.
d2)	235-9106.00-00000	Triangular 8mm	1 pc.
e)	235-9109.00-00000	Daimler Benz type	1 pc.
f)	235-9107.00-00000	Double bit 3mm pin	1 pc.
f1)	235-9108.00-00000	Double bit 5mm pin	1 pc.

*	Function extension
g)	209-9002.00-00000 **Sealing kit IP65 for Quarter-Turns Pr20.1**

1-430.01

all product details on DIRAK.com

Slam Latch

[1-300]

RoHS WEEE

Advantages

- Slam latch for doors and panels.
- Slam latch for doors and panels, can be opened by key or handle.
- The slam latch is screwed onto the latch support.
- Which is either screwed or, in case of heavy application, welded to the door additionaly.
- If assembled without insert, it can be opened with tapered square key.
- The slam bolt has a slam feature.

Materials

- **Housing and lock support:** steel, zinc plated
- **Bolt:** zinc die, zinc plated

Remarks

(S) Door-thickness 1.5 - 2.5mm

1. examples of application

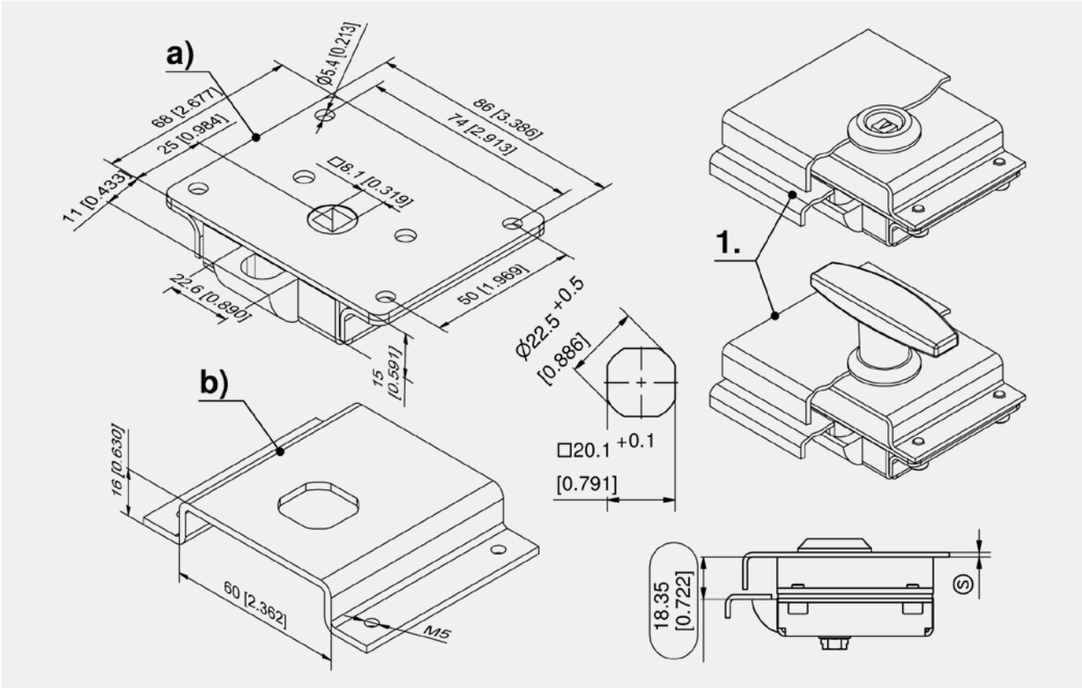

Slam latch

	Part Number	Name	Installation type	Delivery Unit
a)	229-9101.00-00000	Slam Latch	screw- / weld-on	1 pc.
b)	229-0501.00-00000	Lock support	screw- / weld-on	1 pc.

+	Accessories
76	1-100 **Quarter-Turn Pr20.1 L18**
150	1-101 **Inserts Pr20.1**
104	1-130 **Quarter-Turn with Wing Knob Pr20.1 L18**
108	1-140 **Quarter-Turn with T-Handle Pr20.1 L18**
114	1-150 **Quarter-Turn with L-Handle Pr20.1 L18**
754	6-040 **Serrated Screws**

all product details on DIRAK.com

1-300

Swinghandles

LATCHING SOLUTIONS IN USE AT GLASFASER NORDWEST.

In a collaborative partnership with iLOQ, DIRAK has developed a latching solution that is already being used for the telecommunication cabinets of Glasfaser Nordwest. The swinghandle meets the requirements of resistance class RC2 and is thus able to withstand opportunistic vandalism damage. The iLOQ cylinder also offers the perfect solution for access control: authorization can be issued remotely at any time.

Open machines safely.

This swinghandle is suitable for integration into an industrial control system. This ensures that machines and doors can only be opened if there is no danger for persons in the area.

Resistance is not pointless.

The swinghandle has been successfully tested according to Resistance Class RC2, offers reliable resistance to vandalism and protects your application against unauthorized access.

DIRAK-SNAP-Technology.

Did you know? Most of our products are also available with DIRAK-SNAP-Technology (DST).

A true companion.

High-quality DIRAK profile cylinder tested in continuous operation.

Elegant stainless steel handle.

Flat and modern design made of high-quality material for optimum use in a variety of applications.

FLAT SWINGHANDLE IN THE NEW TRAVERSO OF THE SCHWEIZERISCHE SÜDOSTBAHN AG (SWISS SOUTHEAST RAILWAY).

Raphael Schwarz, Development Manager at Letrona, reports: "Since the swinghandle lies flat and the profile cylinder is positioned inside the front wall housing, the latch is not a disruptive element. Thanks to the close collaboration with DIRAK, we have achieved our goal of combining functionality and ergonomics in an elegant design. We are completely satisfied with the solution."

Swinghandle by Cutout

110

Page: 222–223
Cylinder barrel 222–223

B 50 25 50

Page: 224–226
Insert 224–226
Cylinder barrel 224–226
Profile cylinder 226
Padlock 224–225

C 50 50 50

Page: 227–247
Insert 232, 244, 246–248
Cylinder barrel 227–232, 234–235, 244
Profile cylinder . . . . . 232–233, 238 -247
Padlock 233, 237, 240
Combination lock 235

150

Page: 228–230
Cylinder barrel 228–230

90

Page: 250–251
Insert 250–251
Profile cylinder 250–251

105

Page: 252–259
Profile cylinder 252–259
Padlock 252–253
KABA-Zylinder 252–253
Dual cylinder 256–259
Vandalism-proof 254–257

130

Page: 261–272
Profile cylinder 260–272
Padlock 260–261
KABA cylinder 260–261
Dual cylinder . . . . . 264 -267, 272
Vandalism-proof 264–265

Other Cutouts

Page: 274–275
Profile cylinder 274–275

Overview

222 DST Swinghandle RS 110 [2-078DST]

223 DST Swinghandle RS 110 [2-079DST]

224 Swinghandle RS PrB [2-070]

226 Swinghandle SOFT-LINE RS PrB [2-080.01]

227 DST Swinghandle RS PrC [2-075DST]

228 Swinghandle RS PrC with Key Cylinder [2-077]

229 DST Swinghandle RS PrC [2-077DST]

230 DST Swinghandle RS PrC [2-085DST]

232 Swinghandle SOFT-LINE RS PrC [2-080.02]

233 Swinghandle RS PrC for Profile-Cylinder [2-090]

234 Swinghandle RS PrC with Key Cylinder [2-090.01]

235 Swinghandle RS PrC with Combination Lock [2-090.02]

236 Swinghandle RS PrC for Inserts [2-090.03]

237 Swinghandle RS PrC self-locking [2-090.04]

238 DST Swinghandle RS PrC for Profile-Cylinder [2-090DST]

240 Swinghandle RS PrC Stainless Steel [7-065]

242 NT Swinghandle RS PrC Stainless Steel [7-066]

244 Swinghandle RS PrC with Square Threaded Rod [2-092]

246 Swinghandle base PrC [3-400]

247 Swinghandle base with LED Module PrC [3-400E]

248 Carrier base [3-410]

249 Bearing Plate RS base [3-440]

250 Swinghandle RS 90 [2-120]

252 Swinghandle RS 105 for PHZ and KABA-Cylinder [2-100.01]

254 Swinghandle RS 105 for PHZ, RC II [2-102]

255 Swinghandle RS 105 for PHZ, RC II [2-104]

256 Dual-Key Cylinder Swinghandle RS 105, RC II [2-126.01]

258 Dual-Key Cylinder Swinghandle RS 105 PA [2-126.03]

260 Swinghandle RS 130 for PHZ [2-100.02]

262 Swinghandle RS 130 for Rod Latch PrA [2-110]

264 Dual-Key Cylinder Swinghandle RS 130, RC II [2-126.02]

266 Dual-Key Cylinder Swinghandle RS 130 PA [2-126.04]

268 Swinghandle RS 130 for Rod Latch [2-300]

270 Swinghandle RS 130 for Rod Latch [2-340]

272 Swinghandle for Rod Latch 2-400.01 [2-400]

272 Eject and Turn T-Handle FS/RS [3-145]

283 Round Rods with Eye [1-170]

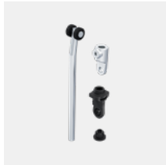

284 Round Rods for Adapter [1-180]

285 Adapter for Round Rods Ø8mm PA [1-181]

285 Adapter for Round Rods Ø8mm / Ø10mm Zinc Die [1-181.01]

286 Round Rods Stainless Steel [7-106]

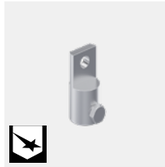

287 Adapter for Round Rods Ø8mm Stainless Steel [7-106.03]

287 Rod Guide RS, height adjustable Stainless Steel [7-912]

288 Height-adjustable Rod Guide RS[1-191]

289 Rod Guides RS [1-192]

290 Rod Guides RS [1-190]

291 Rod Guide RS[1-193]

292 Cams L35/45 Steel [1-102]

294 3-Point Cam L45, Rod Control [2-150]

295 2-, 3- and 4-Point Cam Adapter [2-151]

296 3-Point Cam Adapter [2-151.04]

297 3- and 4-Point Cam Adapter Stainless Steel [7-106.02]

298 3-Point Adapter with H-Dimension Adjustment [2-151.01]

298 3-Point Cam Adapter 45° zinc die [2-151.03]

299 3-Point Cam Adapter 45° Stainless Steel [7-106.01]

300 H-Dimension Adjustment [2-151.02]

300 H-Dimension Adjustment Stainless Steel [7-077.02]

301 Sliding Cap [2-091]

302 Grounding Clip Stainless Steel [3-011]

303 Inserts [2-141]

304 Profile-Cylinder DIN 18252 [2-140]

306 Profile-Cylinder Stainless Steel [7-069]

307 Rod Latch RS [2-340.01]

308 Rod Latch for Internal Release [2-400.01]

DST Swinghandle RS 110

[2-078DST]

Advantages

- Low profile design.
- The pre-assembled swinghandle (single or 3-point cam) can simply be snapped into the cutout. (2./3.)
- 90° closing rotation. (1.)
- Key Cylinder DIRAK 1333 with stainless steel dust cap and 2 keys with synthetic coated grip.
- IP65 according to DIN EN 60529 by captive sealing. (5.)
- RH / LH application is achieved by an adjustable cam stop. (4.)

Materials

- **Swinghandle:** zinc die, black
- **Dish:** PA, black
- **Seal:** TPE
- **Stop:** zinc die, zinc plated

Remarks

H-dimension of cam ≥10mm

Drawings for rod calculation:

1. stroke 18mm
2. clearance

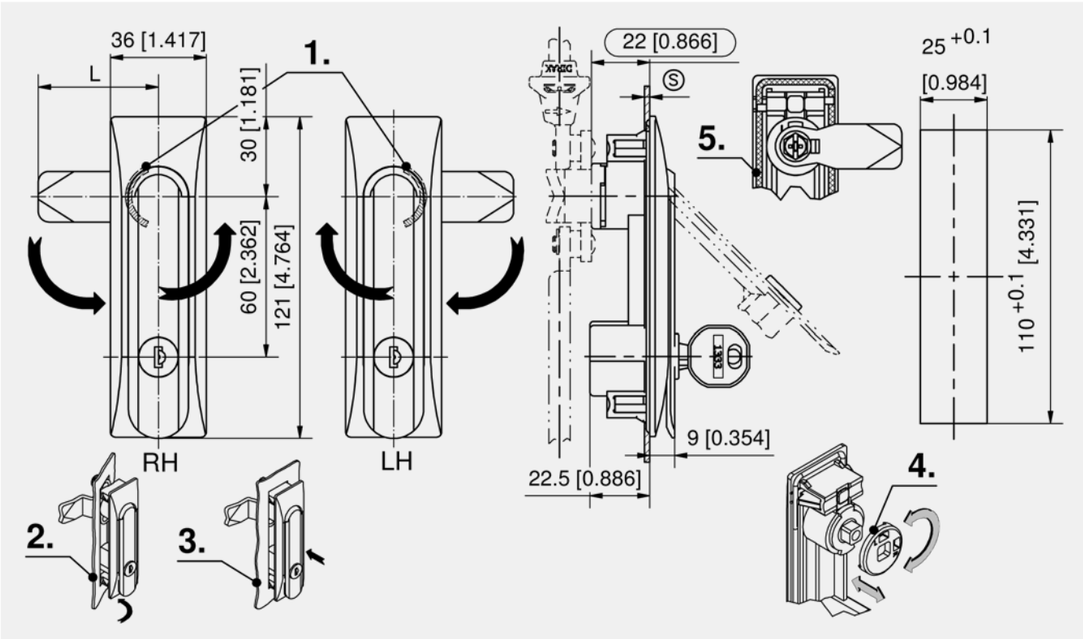

Swinghandle

Part Number	Clamping range (S)	Latching type	Installation type	Delivery Unit
407-9602.00-00015	1.2 - 1.7 mm	keyed alike DIRAK 1333	clip-in	1 pc.
407-9602.00-00020	1.7 - 2.2 mm	keyed alike DIRAK 1333	clip-in	1 pc.
407-9602.00-00025	2.2 - 2.7 mm	keyed alike DIRAK 1333	clip-in	1 pc.

	Accessories
f)	154, 292 1-102 **Cams L35/45 Steel**
f)	165 1-105 **Roller Cam height adjustable**
f)	161 1-262 **Cams variable**
f)	175, 295 2-151 **2-, 3- and 4-Point Cam Adapter**
g)	181, 285 1-181 **Adapter for Round Rods Ø8mm PA**
g)	181, 285 1-181.01 **Adapter for Round Rods Ø8mm / Ø10mm Zinc Die**
h)	179, 283 1-170 **Round Rods with Eye**

	Accessories
h)	180, 284 1-180 **Round Rods for Adapter**
i)	186, 290 1-190 **Rod Guides RS**
i)	185, 289 1-192 **Rod Guides RS**
i)	187, 291 1-193 **Rod Guide RS**
	764 292-0306.80-02530 **Tool for uninstallation**

all product details on DIRAK.com
2-078DST

DST Swinghandle RS 110

[2-079DST]

Advantages

- Low profile design.
- The pre-assembled swinghandle (single or 3-point cam) can simply be snapped into the cutout. (2./3.)
- 90° closing rotation. (1.)
- Key cylinder DIRAK 1333 with stainless steel dust cap and 2 keys with synthetic coated grip.
- RH / LH application is achieved by an adjustable cam stop. (4.)

Materials

- **Swinghandle:** zinc die, black
- **Dish:** PA, black
- **Stop:** zinc die, zinc plated

Remarks

H-dimension of cam ≥10mm

Drawings for rod calculation (see accessories):

1. stroke 18mm
2. clearance

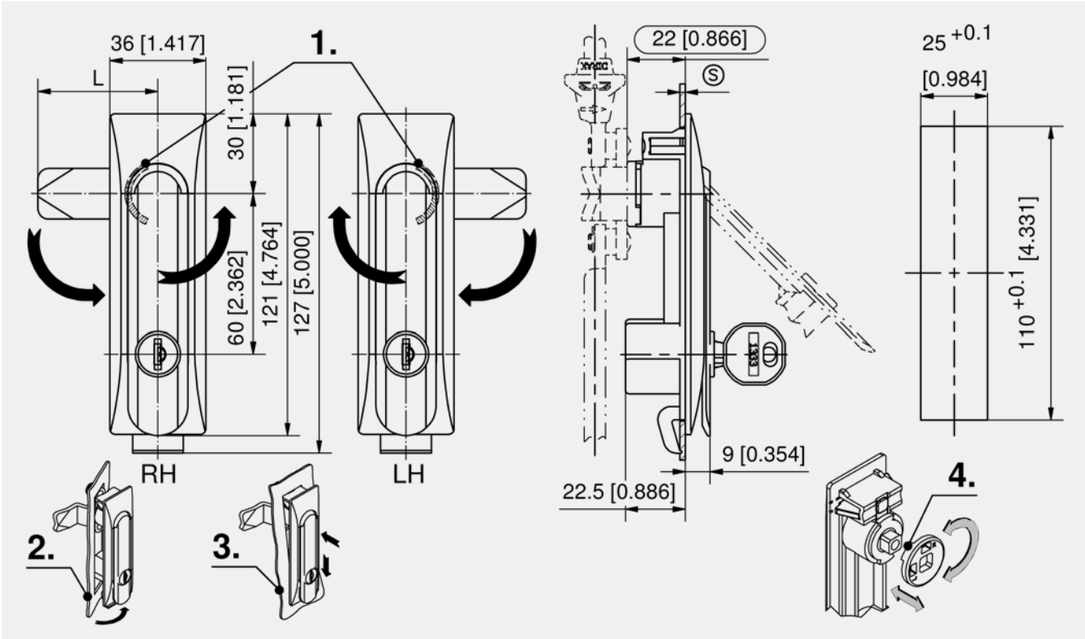

Swinghandle with key cylinder

Part Number	Clamping range (S)	Latching type	Installation type	Delivery Unit
407-9603.00-00015	1.2 - 1.7 mm	keyed alike DIRAK 1333	clip-in	1 pc.
407-9603.00-00020	1.7 - 2.2 mm	keyed alike DIRAK 1333	clip-in	1 pc.
407-9603.00-00025	2.2 - 2.7 mm	keyed alike DIRAK 1333	clip-in	1 pc.

	Accessories
f)	154, 292 1-102 **Cams L35/45 Steel**
f)	165 1-105 **Roller Cam height adjustable**
f)	161 1-262 **Cams variable**
f)	175, 295 2-151 **2-, 3- and 4-Point Cam Adapter**
g)	181, 285 1-181 **Adapter for Round Rods Ø8mm PA**
g)	181, 285 1-181.01 **Adapter for Round Rods Ø8mm / Ø10mm Zinc Die**

	Accessories
h)	179, 283 1-170 **Round Rods with Eye**
h)	180, 284 1-180 **Round Rods for Adapter**
i)	186, 290 1-190 **Rod Guides RS**
i)	185, 289 1-192 **Rod Guides RS**
i)	187, 291 1-193 **Rod Guide RS**
	764 292-0306.80-02530 **Tool for uninstallation**

all product details on DIRAK.com
2-079DST

Swinghandle RS PrB

[2-070]

B

R L

IP 65

RoHS WEEE

Advantages

- Swinghandle TRIMLINE for cutout B.
- For round rods, for key cylinder, insert or padlock.
- Locking stub included in handle assembly.
- IP65 according to DIN EN 60529.
- RH / LH application.
- Grounding by grounding clip (optional).
- Key cylinders are supplied with 2 keys.

Materials

- **Swinghandle and dish:** see table
- **Padlock eye:** AISI 316
- **Cap:** PA, black
- **O-ring:** NBR

Remarks

(S) Door-thickness 1.5 - 2.5mm

For version for rod latch and flat rods see product system 3-070.

Locking inserts must be ordered separately, see c).

Drawings for rod calculation (see accessories):

1. stroke 18mm
2. clearance

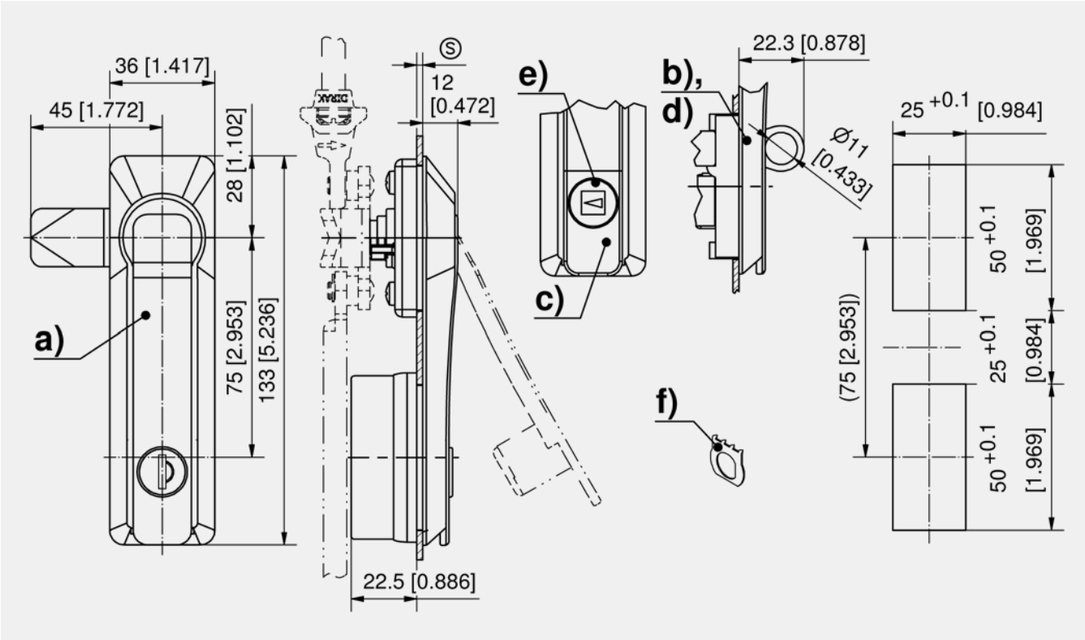

Swinghandle zinc die, with key cylinder

	Part Number	Latching type	Surface handle	Surface dish	Installation type	Delivery Unit
a)	407-9003.00-00000	keyed alike DIRAK 1333	black	black	screw-on	1 pc.
a)	407-9007.00-00000	keyed alike DIRAK 1333	chrome plated	chrome plated	screw-on	1 pc.
a)	407-9011.00-00000	keyed alike DIRAK 1333	chrome plated	black	screw-on	1 pc.
a)	407-9017.00-00000	keyed alike DIRAK 1333	black	chrome plated	screw-on	1 pc.
a)	507-9003.00-00000	keyed alike DS200	black	black	screw-on	1 pc.
a)	507-9007.00-00000	keyed alike DS200	chrome plated	chrome plated	screw-on	1 pc.
a)	507-9011.00-00000	keyed alike DS200	chrome plated	black	screw-on	1 pc.
a)	507-9017.00-00000	keyed alike DS200	black	chrome plated	screw-on	1 pc.
a)	407-9008.00-00000	keyed different	chrome plated	chrome plated	screw-on	1 pc.
a)	407-9004.00-00000	keyed different	black	black	screw-on	1 pc.
a)	407-9012.00-00000	keyed different	chrome plated	black	screw-on	1 pc.
a)	407-9018.00-00000	keyed different	black	chrome plated	screw-on	1 pc.

2-070

all product details on DIRAK.com

Swinghandle zinc die, dish PA with key cylinder

	Part Number	Latching type	Surface handle	Surface dish	Installation type	Delivery Unit
a)	407-9023.00-00000	keyed alike DIRAK 1333	black	black	screw-on	1 pc.
a)	407-9027.00-00000	keyed alike DIRAK 1333	chrome plated	black	screw-on	1 pc.
a)	507-9023.00-00000	keyed alike DS200	black	black	screw-on	1 pc.
a)	507-9027.00-00000	keyed alike DS200	chrome plated	black	screw-on	1 pc.
a)	407-9024.00-00000	keyed different	black	black	screw-on	1 pc.
a)	407-9028.00-00000	keyed different	chrome plated	black	screw-on	1 pc.

Swinghandle zinc die, with key cylinder and padlock eye

	Part Number	Latching type	Surface handle	Surface dish	Installation type	Delivery Unit
b)	407-9029.00-00000	keyed alike DIRAK 1333	chrome plated	chrome plated	screw-on	1 pc.
b)	407-9031.00-00000	keyed alike DIRAK 1333	black	black	screw-on	1 pc.
b)	407-9030.00-00000	keyed different	chrome plated	chrome plated	screw-on	1 pc.
b)	407-9032.00-00000	keyed different	black	black	screw-on	1 pc.

Swinghandle zinc die for insert

	Part Number	Surface handle	Surface dish	Installation type	Delivery Unit
c)	407-9102.00-00000	black	black	screw-on	1 pc.
c)	407-9104.00-00000	chrome plated	chrome plated	screw-on	1 pc.
c)	407-9106.00-00000	chrome plated	black	screw-on	1 pc.
c)	407-9108.00-00000	black	chrome plated	screw-on	1 pc.

Swinghandle zinc die, dish PA for insert

	Part Number	Surface handle	Surface dish	Installation type	Delivery Unit
c)	407-9118.00-00000	black	black	screw-on	1 pc.
c)	407-9120.00-00000	chrome plated	black	screw-on	1 pc.

Swinghandle zinc die for insert and padlock eye

	Part Number	Surface handle	Dish material	Surface dish	Installation type	Delivery Unit
d)	407-9109.00-00000	chrome plated	zinc die	chrome plated	screw-on	1 pc.
d)	407-9110.00-00000	black	zinc die	black	screw-on	1 pc.
d)	407-9111.00-00000	black	zinc die	chrome plated	screw-on	1 pc.
d)	407-9112.00-00000	chrome plated	zinc die	black	screw-on	1 pc.
d)	407-9121.00-00000	black	PA	black	screw-on	1 pc.
d)	407-9122.00-00000	chrome plated	PA	black	screw-on	1 pc.

	Accessories
e)	303 2-141 **Inserts**
f)	302, 366 3-011 **Grounding Clip Stainless Steel**
l)	154, 292 1-102 **Cams L35/45 Steel**
l)	165 1-105 **Roller Cam height adjustable**
l)	294 2-150 **3-Point Cam L45, Rod Control**
m)	181, 285 1-181 **Adapter for Round Rods Ø8mm PA**
m)	181, 285 1-181.01 **Adapter for Round Rods Ø8mm / Ø10mm Zinc Die**
n)	179, 283 1-170 **Round Rods with Eye**
n)	180, 284 1-180 **Round Rods for Adapter**
o)	186, 290 1-190 **Rod Guides RS**
	768 6-100 **Wrench**
	766 6-101 **Universal key**

Swinghandle SOFTLINE RS PrB

[2-080.01]

Advantages

- Swinghandle SOFTLINE with liftable operating lever.
- 90° Closing rotation.
- The swinghandle can be locked with 40mm long profile-cylinders (DIN 18252), cylinder or insert. Cylinder cam on 45° or 90°.
- Locking stub is included in handle-assembly.
- Available with two different sliding dustcovers.
- IP65 according to DIN 60529 - version dish with cap.
- For non IP65 applications - version dish with hook.
- RH / LH application.
- Grounding by grounding clip (optional).

Materials

- **Swinghandle, dish, cap, sliding cover:** PA, black

Remarks

(S) Door-thickness 1.5 - 2.5mm

Drawings for rod calculation (see accessories):

1. stroke 18mm
2. clearance

Inserts must be ordered separately.

Version b), c) and d) for 40mm PHZ, key cylinder or insert.

Version a1) and b1) for 40mm PHZ with protruding cyinder head.

Version c) is supplied with 2 keys.

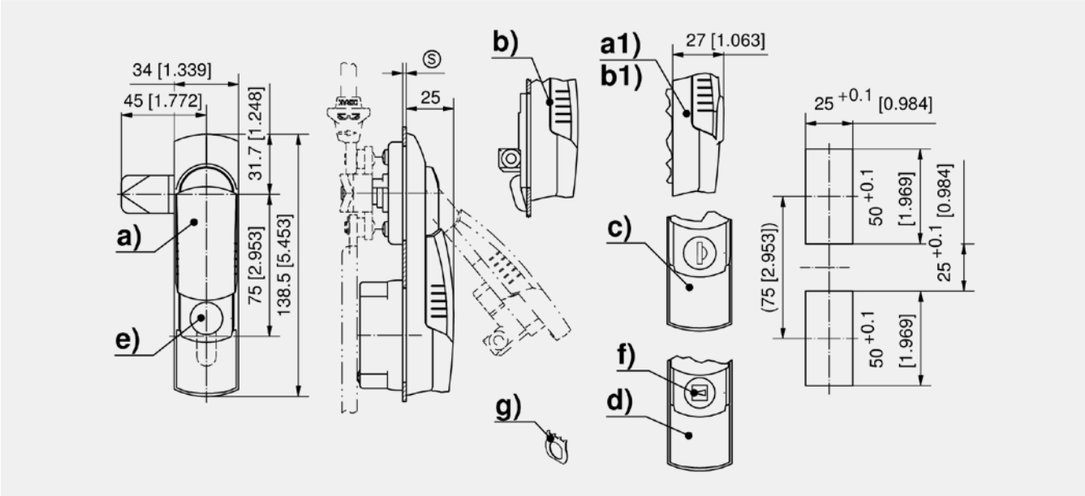

Swinghandle

	Part Number	Latching type	Version	Dish	IP protection	Installation type	Delivery Unit
a)	407-9055.00-00000	for PHZ	for up to 2.5mm protruding cylinder head	with cap	IP65	screw-on	1 pc.
a1)	407-9056.00-00000	for PHZ	for up to 5mm protruding cylinder head	with cap	IP65	screw-on	1 pc.
b)	407-9045.00-00000	for PHZ	for up to 2.5mm protruding cylinder head	with hook		screw-on	1 pc.
b1)	407-9046.00-00000	for PHZ	for up to 5mm protruding cylinder head	with hook		screw-on	1 pc.
c)	407-9053.00-00000	keyed alike DIRAK 1333		with cap	IP65	screw-on	1 pc.
c)	507-9268.00-00000	keyed alike DS200		with cap	IP65	screw-on	1 pc.
c)	407-9054.00-00000	keyed different		with cap	IP65	screw-on	1 pc.
c)	407-9043.00-00000	keyed alike DIRAK 1333		with hook		screw-on	1 pc.
c)	507-9265.00-00000	keyed alike DS200		with hook		screw-on	1 pc.
c)	407-9044.00-00000	keyed different		with hook		screw-on	1 pc.
d)	407-9057.00-00000	for insert		with cap	IP65	screw-on	1 pc.
d)	407-9047.00-00000	for insert		with hook		screw-on	1 pc.

	Accessories
e)	304, 388 2-140 **Profile-Cylinder DIN 18252**
f)	303 2-141 **Inserts**
g)	302, 366 3-011 **Grounding Clip Stainless Steel**
l)	154, 292 1-102 **Cams L35/45 Steel**
l)	165 1-105 **Roller Cam height adjustable**
l)	294 2-150 **3-Point Cam L45, Rod Control**
m)	181, 285 1-181 **Adapter for Round Rods Ø8mm PA**

	Accessories
m)	181, 285 1-181.01 **Adapter for Round Rods Ø8mm / Ø10mm Zinc Die**
n)	179, 283 1-170 **Round Rods with Eye**
n)	180, 284 1-180 **Round Rods for Adapter**
o)	186, 290 1-190 **Rod Guides RS**
	768 6-100 **Wrench**
	766 6-101 **Universal key**

2-080.01

◂ all product details on DIRAK.com

DST Swinghandle RS PrC

[2-075DST]

Advantages

- Swinghandle with liftable operating lever with key cylinder and 2 keys.
- Tool-less installation.
- The swinghandle pre-assembled by DIRAK is hooked into the cutout provided and then clipped into place in the upper area.
- 90° Closing rotation.
- RH / LH application.
- Grounding by assembled grounding clip.
- On request available with pre-assembled cam / 3-point cam.
- A non-locked handle has a detent in the door-dish.

Materials

- **Handle and turning-disk:** zinc die, black
- **Dish:** PA, black
- **Stop:** zinc die, zinc plated
- **Grounding clip:** stainless steel
- **Locking cylinder and snap wedges:** PA

Remarks

Drawings for rod calculation (see accessories):

1. stroke 18mm
2. clearance

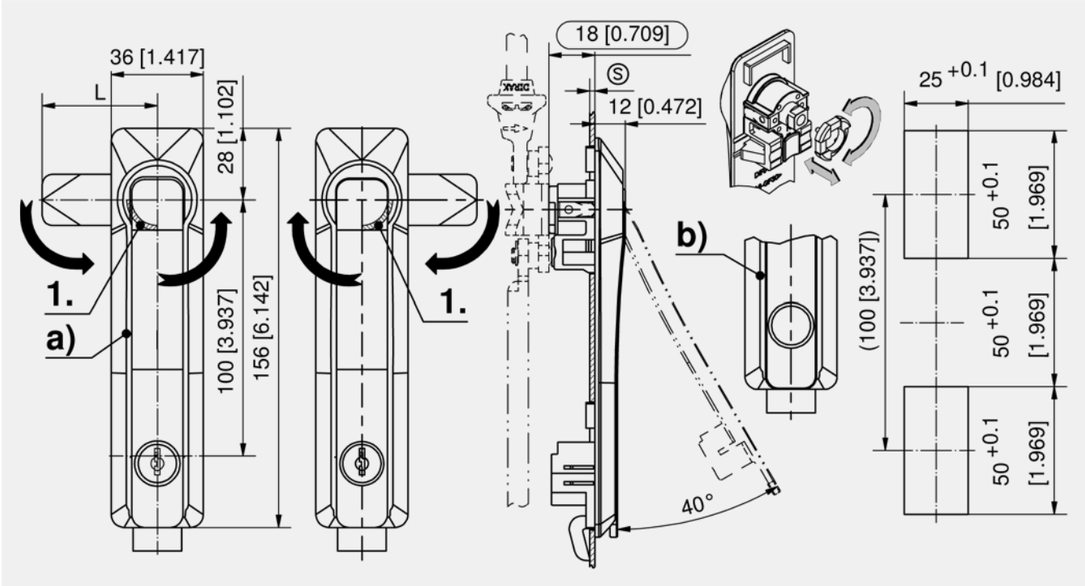

Swinghandle

	Part Number	Clamping range (S)	Latching type	Installation type	Delivery Unit
a)	407-9302.00-00015	1.2 - 1.7 mm	keyed alike DIRAK 1333	clip-in	1 pc.
a)	407-9302.00-00020	1.7 - 2.2 mm	keyed alike DIRAK 1333	clip-in	1 pc.
a)	407-9301.00-00015	1.2 - 1.7 mm	keyed different	clip-in	1 pc.
a)	407-9301.00-00020	1.7 - 2.2 mm	keyed different	clip-in	1 pc.
b)	407-9303.00-00015	1.2 - 1.7 mm	without lock, with plug	clip-in	1 pc.
b)	407-9303.00-00020	1.7 - 2.2 mm	without lock, with plug	clip-in	1 pc.

	Accessories
	764 292-0301.15-00000 **Tool for uninstallation**
	764 292-0306.80-02530 **Tool for uninstallation**
	154, 292 1-102 **Cams L35/45 Steel**
	175, 295 2-151 **2-, 3- and 4-Point Cam Adapter**
	176, 296 2-151.04 **3-Point Cam Adapter**

all product details ▸ on DIRAK.com

2-075DST

Swinghandle RS PrC with Key Cylinder

[2-077]

Advantages

- Low profile design.
- 90° Closing rotation. (1.)
- Key Cylinder DIRAK 1333 with stainless steel dust cap and 2 keys with synthetic coated grip.
- IP65 according to DIN EN 60529 by captive sealing.(3.)
- RH / LH application is achieved by an adjustable cam stop with 90° rotation. (4.)
- The pre-assembled swinghandle (single or 3-point cam) can be inserted into the cutout and secured with screws.

Materials

- **Swinghandle, shaft and bottom:** zinc die, black
- **Door dish:** PA, black
- **Cam:** zinc die, untreated
- **O-ring:** NBR
- **Seal:** TPE
- **Screws and clamp:** steel, zinc plated
- **Stop:** zinc die, zinc plated

Remarks

(S) Door-thickness 1.5 - 2.5mm

H-dimension of cam ≥16mm

2. clamp

Drawings for rod calculation (see accessories):

1. stroke 18mm
2. clearance

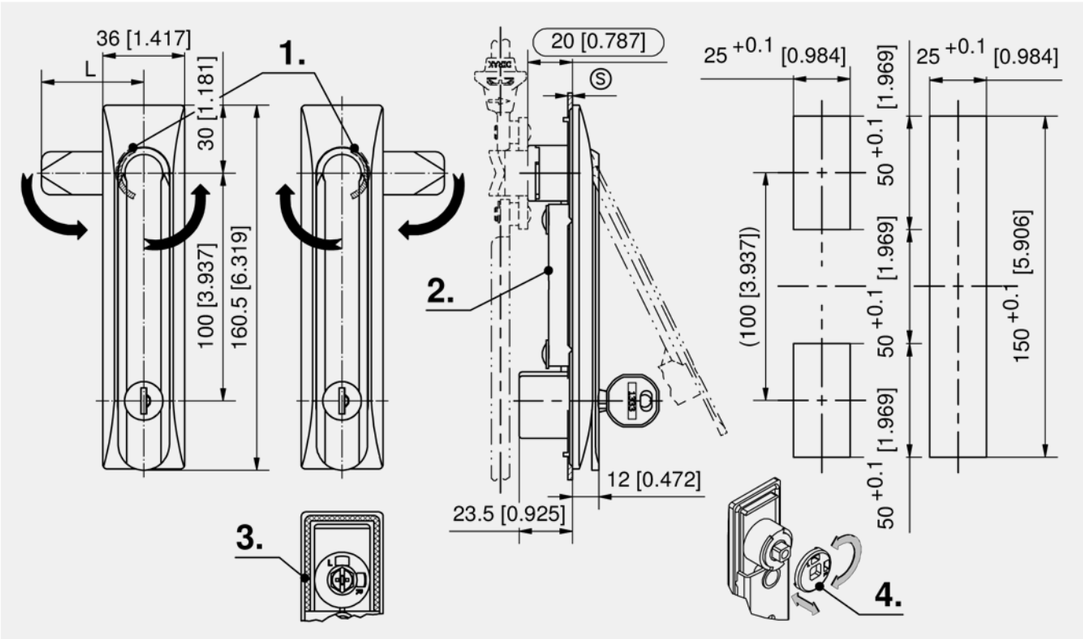

Swinghandle

Part Number	Latching type	Installation type	Delivery Unit
407-9604.00-00000	keyed alike DIRAK 1333	screw-on	1 pc.

	Accessories
f)	154, 292 1-102 **Cams L35/45 Steel**
f)	165 1-105 **Roller Cam height adjustable**
f)	161 1-262 **Cams variable**
f)	175, 295 2-151 **2-, 3- and 4-Point Cam Adapter**
g)	181, 285 1-181 **Adapter for Round Rods Ø8mm PA**
g)	181, 285 1-181.01 **Adapter for Round Rods Ø8mm / Ø10mm Zinc Die**
h)	179, 283 1-170 **Round Rods with Eye**
h)	180, 284 1-180 **Round Rods for Adapter**
i)	186, 290 1-190 **Rod Guides RS**

	Accessories
i)	185, 289 1-192 **Rod Guides RS**
i)	187, 291 1-193 **Rod Guide RS**

2-077

◂ all product details on DIRAK.com

DST Swinghandle RS PrC

[2-077DST]

Advantages

- Low profile design.
- Tool-less installation.
- The pre-assembled swinghandle (single or 3-point cam) can simply be snapped into the cutout. (3./4.)
- 90° Closing rotation. (1.)
- Key Cylinder DIRAK 1333 with stainless steel dust cap and 2 keys with synthetic coated grip.
- Seismic-proof according to GR-63-CORE, Issue 4.
- Vibration-proof according to DIN EN 61373.
- IP65 according to DIN EN 60529 by captive sealing. (2.)
- RH / LH Application is achieved by an adjustable cam stop. (5.)

Materials

- **Swinghandle and dish:** zinc die, black
- **Seal:** TPE
- **Stop:** zinc die, zinc plated

Remarks

H-dimension of cam ≥16 mm

Drawings for rod calculation (see accessories):

1. stroke 18mm
2. clearance

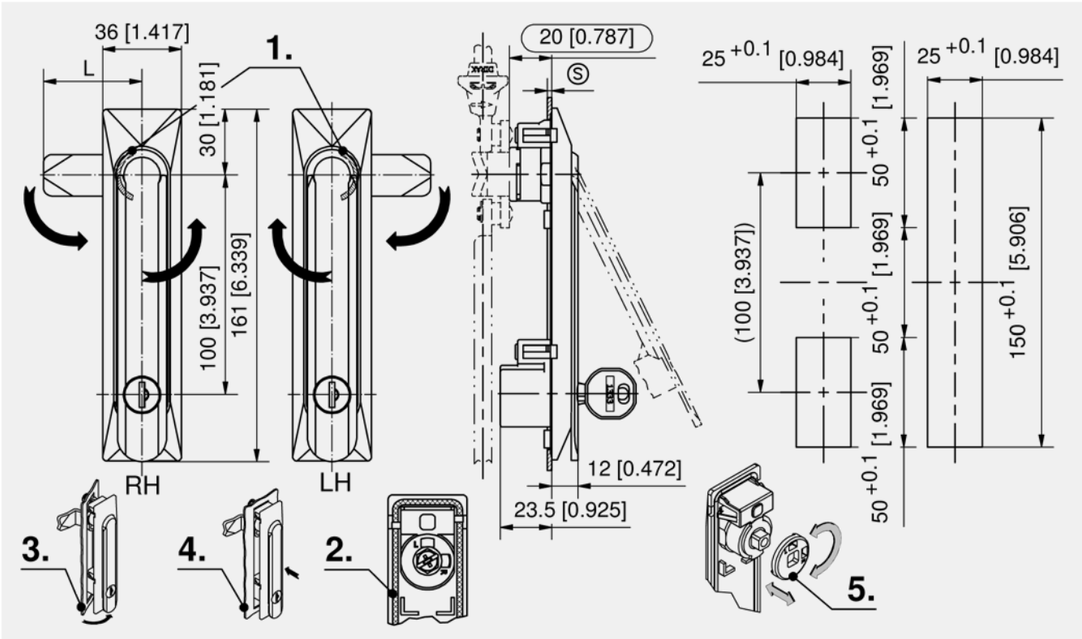

Swinghandle

Part Number	Clamping range (S)	Latching type	Installation type	Delivery Unit
407-9601.00-00015	1.2 - 1.7 mm	keyed alike DIRAK 1333	clip-in	1 pc.
407-9601.00-00020	1.7 - 2.2 mm	keyed alike DIRAK 1333	clip-in	1 pc.
407-9601.00-00025	2.2 - 2.7 mm	keyed alike DIRAK 1333	clip-in	1 pc.

	Accessories
f)	154, 292 1-102 **Cams L35/45 Steel**
f)	165 1-105 **Roller Cam height adjustable**
f)	161 1-262 **Cams variable**
f)	175, 295 2-151 **2-, 3- and 4-Point Cam Adapter**
g)	181, 285 1-181 **Adapter for Round Rods Ø8mm PA**
g)	181, 285 1-181.01 **Adapter for Round Rods Ø8mm / Ø10mm Zinc Die**
h)	179, 283 1-170 **Round Rods with Eye**

	Accessories
h)	180, 284 1-180 **Round Rods for Adapter**
i)	186, 290 1-190 **Rod Guides RS**
i)	185, 289 1-192 **Rod Guides RS**
i)	187, 291 1-193 **Rod Guide RS**
	764 292-0306.80-02530 **Tool for uninstallation**

all product details ▸ on DIRAK.com

2-077DST

DST Swinghandle RS PrC

[2-085DST]

Advantages

- Low profile design.
- 90° closing rotation. (1.)
- The pre-assembled swinghandle (single or 3-point cam) can simply be snapped into the cutout. (2./3.)
- RH / LH application is achieved by an adjustable cam stop. (4.)
- Key cylinder DIRAK 1333 with stainless steel dust cap and 2 keys.

Materials

- **Swinghandle:** zinc die, black
- **Dish:** PA, black
- **Stop:** zinc die, zinc plated

Remarks

H-dimension of cam ≥16mm

Drawings for rod calculation (see accessories):

1. stroke 18mm
2. clearance

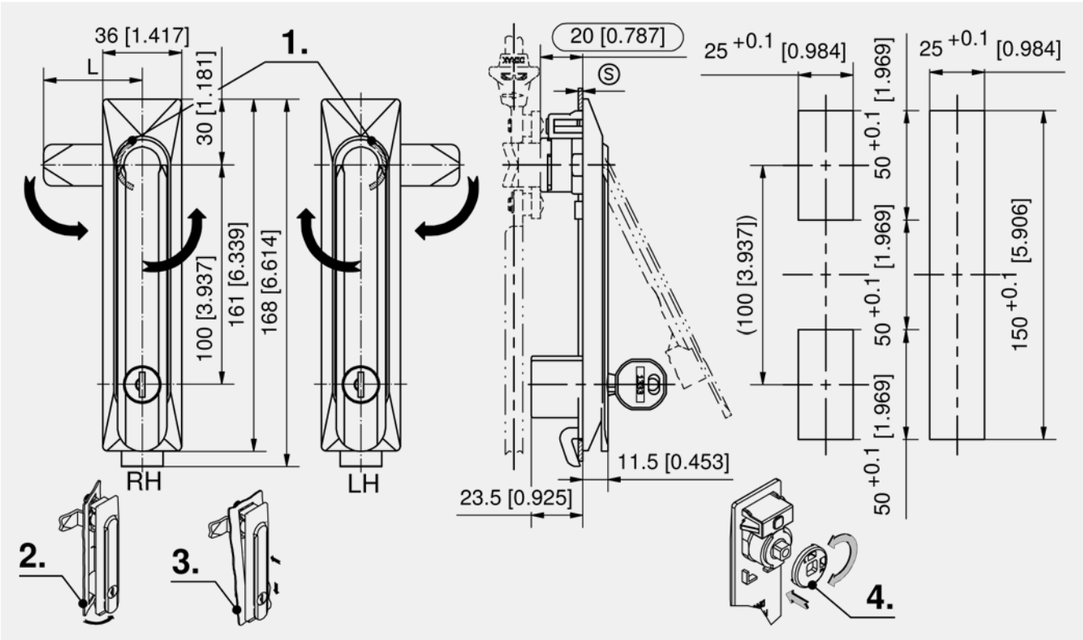

Swinghandle

Part Number	Clamping range (S)	Latching type	Installation type	Delivery Unit
407-9606.00-00015	1.2 - 1.7 mm	keyed alike DIRAK 1333	clip-in	1 pc.
407-9606.00-00020	1.7 - 2.2 mm	keyed alike DIRAK 1333	clip-in	1 pc.

	Accessories
f)	154, 292 1-102 **Cams L35/45 Steel**
f)	165 1-105 **Roller Cam height adjustable**
f)	161 1-262 **Cams variable**
f)	175, 295 2-151 **2-, 3- and 4-Point Cam Adapter**
g)	181, 285 1-181 **Adapter for Round Rods Ø8mm PA**
g)	181, 285 1-181.01 **Adapter for Round Rods Ø8mm / Ø10mm Zinc Die**

	Accessories
h)	179, 283 1-170 **Round Rods with Eye**
h)	180, 284 1-180 **Round Rods for Adapter**
i)	186, 290 1-190 **Rod Guides RS**
i)	185, 289 1-192 **Rod Guides RS**
i)	187, 291 1-193 **Rod Guide RS**
	764 292-0306.80-02530 **Tool for uninstallation**

2-085DST

all product details on DIRAK.com

Swinghandle base

See page 246

Swinghandle SOFTLINE RS PrC

[2-080.02]

Advantages

- Swinghandle SOFTLINE with liftable operating lever.
- 90° Closing rotation.
- The swinghandle can be locked with 40mm long profile-cylinders (DIN 18252), key cylinder or insert. Cylinder cam on 45° or 90°.
- Locking stub is included in handle-assembly.
- Available with two different sliding dustcovers.
- IP65 according to DIN 60529 - version dish with cap.
- For non IP65 applications - version dish with hook.
- RH / LH application.
- Grounding by grounding clip (optinal).

Materials

- **Swinghandle, dish, cap, sliding cover:** PA, black

Remarks

(S) Door-thickness 1.5 - 2.5mm

Drawings for rod calculation (see accessories):

1. stroke 18mm

2. clearance

Inserts must be ordered separately.

Version b), c) and d) for 40mm PHZ, key cylinder or insert.

Version a1) and b1) for 40mm PHZ with protruding cyinder head.

Version c) is supplied with 2 keys.

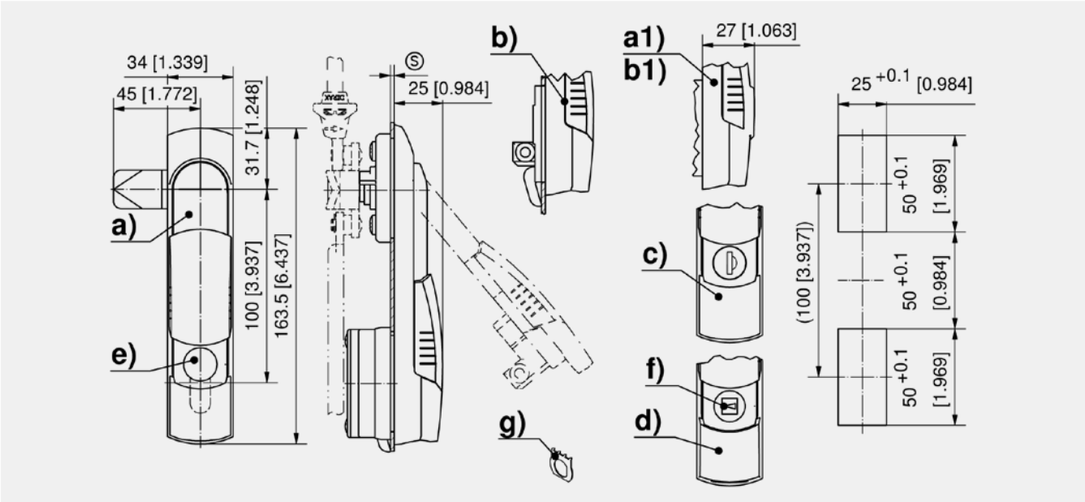

Swinghandle

	Part Number	Latching type	Version	Dish	IP protection	Installation type	Delivery Unit
a)	107-9005.00-00000	for PHZ	for up to 2.5mm protruding cylinder head	with cap	IP65	screw-on	1 pc.
a1)	107-9006.00-00000	for PHZ	for up to 5mm protruding cylinder head	with cap	IP65	screw-on	1 pc.
b)	107-9007.00-00000	for PHZ	for up to 2.5mm protruding cylinder head	with hook		screw-on	1 pc.
b1)	107-9008.00-00000	for PHZ	for up to 5mm protruding cylinder head	with hook		screw-on	1 pc.
c)	107-9018.00-00000	keyed alike DIRAK 1333		with cap	IP65	screw-on	1 pc.
c)	507-9210.00-00000	keyed alike DS200		with cap	IP65	screw-on	1 pc.
c)	107-9020.00-00000	keyed different		with cap	IP65	screw-on	1 pc.
c)	107-9021.00-00000	keyed alike DIRAK 1333		with hook		screw-on	1 pc.
c)	507-9211.00-00000	keyed alike DS200		with hook		screw-on	1 pc.
c)	107-9023.00-00000	keyed different		with hook		screw-on	1 pc.
d)	107-9024.00-00000	for insert		with cap	IP65	screw-on	1 pc.
d)	107-9025.00-00000	for insert		with hook		screw-on	1 pc.

	Accessories
e)	304, 388 2-140 **Profile-Cylinder DIN 18252**
f)	303 2-141 **Inserts**
g)	302, 366 3-011 **Grounding Clip Stainless Steel**
	154, 292 1-102 **Cams L35/45 Steel**
	165 1-105 **Roller Cam height adjustable**
	294 2-150 **3-Point Cam L45, Rod Control**
	181, 285 1-181 **Adapter for Round Rods Ø8mm PA**

	Accessories
	181, 285 1-181.01 **Adapter for Round Rods Ø8mm / Ø10mm Zinc Die**
	179, 283 1-170 **Round Rods with Eye**
	180, 284 1-180 **Round Rods for Adapter**
	186, 290 1-190 **Rod Guides RS**
	768 6-100 **Wrench**
	766 6-101 **Universal key**

◂ all product details on DIRAK.com
2-080.02

Swinghandle RS PrC for Profile-Cylinder

[2-090]

Advantages

- Swinghandle with liftable operating lever.
- 90° Closing rotation.
- Swinghandle can be locked with profile-cylinders with 45° or 90° locking cam.
- The listed swinghandles, can be retrofitted with a sliding cap (product system 2-091).
- The sliding cap can be used for profile-cylinders from product system 2-140 and also for raised profile cylinders.
- IP65 according to DIN EN 60529 - version dish with cap.
- RH / LH application.
- Grounding by grounding clip (optional).

Materials

- **Handle, dish and cylinder dustcover:** see table
- **Shaft:** brass
- **Bearing plate:** zinc die, untreated
- **Cap:** PA, black
- **Seals:** NBR

Remarks

(S) Door-thickness 1.5 - 2.5mm

Drawings for rod calculation (see accessories):

1. stroke 18mm

2. clearance

Screws M5x16 for fastening cylinder included.

Alternative products see also 2-090.01, 2-090.02, 2-090.03, 2-090.04.

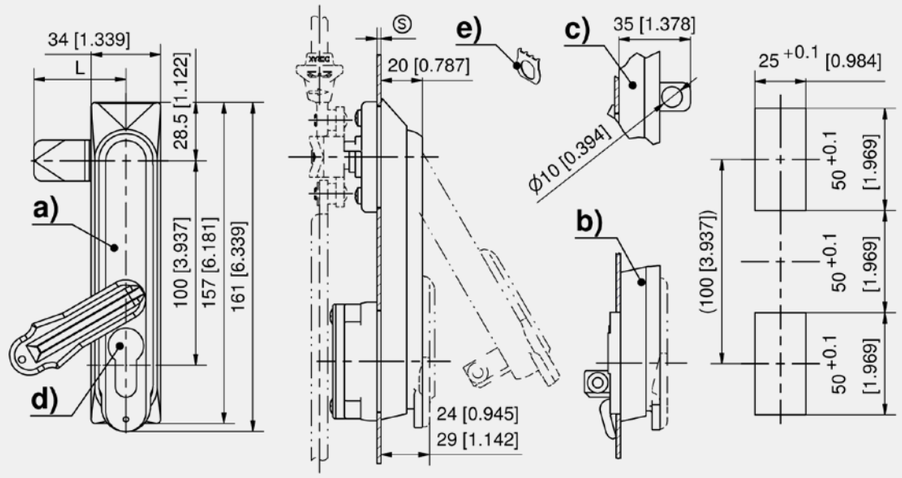

Swinghandle for profile cylinder

	Part Number	Latching type	Handle material	Surface handle	Dish material	Surface dish	Dish	IP protection	Cylinder cover material	Securable	Padlock bolt	Delivery Unit
a)	207-9282.00-00000	PHZ 40mm	PA	black	PA	black	with cap	IP65				1 pc.
a)	207-9283.00-00000	PHZ 40mm	PA	black	PA	black	with cap	IP65	PA	Yes		1 pc.
a)	207-9284.00-00000	PHZ 45mm	PA	black	PA	black	with cap	IP65	PA	Yes		1 pc.
b)	107-9254.00-00000	PHZ 40mm	PA	black	PA	black	with hook					1 pc.
b)	107-9255.00-00000	PHZ 40mm	PA	black	PA	black	with hook		PA	Yes		1 pc.
a)	107-9226.00-00000	PHZ 40mm	zinc die	black	PA	black	with cap	IP65				1 pc.
a)	107-9227.00-00000	PHZ 40mm	zinc die	black	PA	black	with cap	IP65	PA	Yes		1 pc.
a)	107-9228.00-00000	PHZ 45mm	zinc die	black	PA	black	with cap	IP65	PA	Yes		1 pc.
c)	107-9282.00-00000	PHZ 40mm	zinc die	black	PA	black	with cap	IP65			Yes	1 pc.
a)	107-9225.00-00000	PHZ 40mm	zinc die	chrome plated	PA	black	with cap	IP65				1 pc.
a)	107-9208.00-00000	PHZ 40mm	zinc die	black	zinc die	black	with cap	IP65	zinc die	Yes		1 pc.

	Accessories
d)	304, 388 2-140 **Profile-Cylinder DIN 18252**
e)	302, 366 3-011 **Grounding Clip Stainless Steel**
f)	294 2-150 **3-Point Cam L45, Rod Control**
f)	175, 295 2-151 **2-, 3- and 4-Point Cam Adapter**
f)	176, 296 2-151.04 **3-Point Cam Adapter**
g)	181, 285 1-181 **Adapter for Round Rods Ø8mm PA**

	Accessories
g)	181, 285 1-181.01 **Adapter for Round Rods Ø8mm / Ø10mm Zinc Die**
h)	179, 283 1-170 **Round Rods with Eye**
h)	180, 284 1-180 **Round Rods for Adapter**
i)	186, 290 1-190 **Rod Guides RS**
i)	187, 291 1-193 **Rod Guide RS**
	301 2-091 **Sliding Cap**

all product details ▸ on DIRAK.com
2-090

Swinghandle RS PrC with Key Cylinder [2-090.01]

Advantages

- Swinghandle with liftable operating lever.
- 90° Closing rotation.
- Swinghandle can be locked by assembled key cylinder with 2 keys.
- The listed swinghandles, can be retrofitted with a sliding cap (product system 2-091).
- IP65 according to DIN EN 60529.
- RH / LH application.
- Grounding by grounding clip (optional).

Materials

- **Handle:** zinc die, chrome plated or black or PA, black
- **Dish, cap and cylinder dust-cover:** PA, black
- **Shaft:** brass
- **Bearing plate:** zinc die, untreated
- **Seals:** NBR

Remarks

(S) Door-thickness 1.5 - 2.5mm

Drawings for rod calculation (see accessories):

1. stroke 18mm
2. clearance

Alternative products see also 2-090, 2-090.02, 2-090.03, 2-090.04.

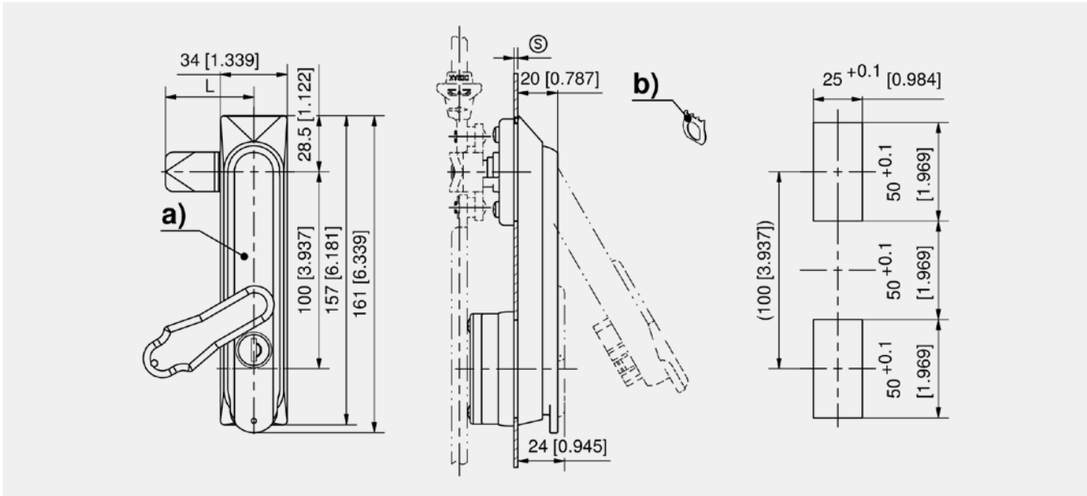

Swinghandle with key cylinder

	Part Number	Latching type	Handle material	Surface handle	Cylinder cover material	Securable	Installation type	Delivery Unit
a)	207-9238.00-00000	keyed alike DIRAK 1333	PA	black			screw-on	1 pc.
a)	207-9240.00-00000	keyed alike DIRAK 1333	PA	black	PA	Yes	screw-on	1 pc.
a)	507-9238.00-00000	keyed alike DS200	PA	black			screw-on	1 pc.
a)	507-9240.00-00000	keyed alike DS200	PA	black	PA	Yes	screw-on	1 pc.
a)	207-9239.00-00000	keyed different	PA	black			screw-on	1 pc.
a)	207-9241.00-00000	keyed different	PA	black	PA	Yes	screw-on	1 pc.
a)	107-9201.00-00000	keyed alike DIRAK 1333	zinc die	chrome plated			screw-on	1 pc.
a)	107-9202.00-00000	keyed alike DIRAK 1333	zinc die	black			screw-on	1 pc.
a)	507-9201.00-00000	keyed alike DS200	zinc die	chrome plated			screw-on	1 pc.
a)	507-9202.00-00000	keyed alike DS200	zinc die	black			screw-on	1 pc.
a)	107-9203.00-00000	keyed different	zinc die	chrome plated			screw-on	1 pc.
a)	107-9204.00-00000	keyed different	zinc die	black			screw-on	1 pc.

	Accessories
b)	302, 366 3-011 **Grounding Clip Stainless Steel**
f)	294 2-150 **3-Point Cam L45, Rod Control**
f)	175, 295 2-151 **2-, 3- and 4-Point Cam Adapter**
f)	176, 296 2-151.04 **3-Point Cam Adapter**
g)	181, 285 1-181 **Adapter for Round Rods Ø8mm PA**
g)	181, 285 1-181.01 **Adapter for Round Rods Ø8mm / Ø10mm Zinc Die**

	Accessories
h)	179, 283 1-170 **Round Rods with Eye**
h)	180, 284 1-180 **Round Rods for Adapter**
i)	186, 290 1-190 **Rod Guides RS**
i)	187, 291 1-193 **Rod Guide RS**
	301 2-091 **Sliding Cap**

2-090.01

all product details on DIRAK.com

Swinghandle RS PrC with Combination Lock [2-090.02]

Advantages

- Swinghandle with liftable operating lever.
- 90° Closing rotation.
- Swinghandle can be locked by combination lock and assembled key cylinder with 2 keys.
- Modifying the comination only in opened state possible.
- IP65 according to DIN EN 60529 - version dish with cap.
- RH / LH application.
- Grounding by grounding nut (optional).
- Version c) two opening options: 1. with fixed number code for the combination lock, 2. by turning the key in the cylinder. The combination lock is and remains in locked position. The cylinder has the "over-ride" function.

Materials

- **Handle:** zinc die, chrome plated or black or PA, black
- **Dish and cap:** PA, black
- **Shaft:** brass
- **Bearing plate:** zinc die, untreated
- **Seals:** NBR

Remarks

(S) Door-thickness 1.5 - 2.5mm

Alternative products see also 2-090, 2-090.01, 2-090.03, 2-090.04.

Drawings for rod calculation (see accessories):

1. stroke 18mm
2. clearance

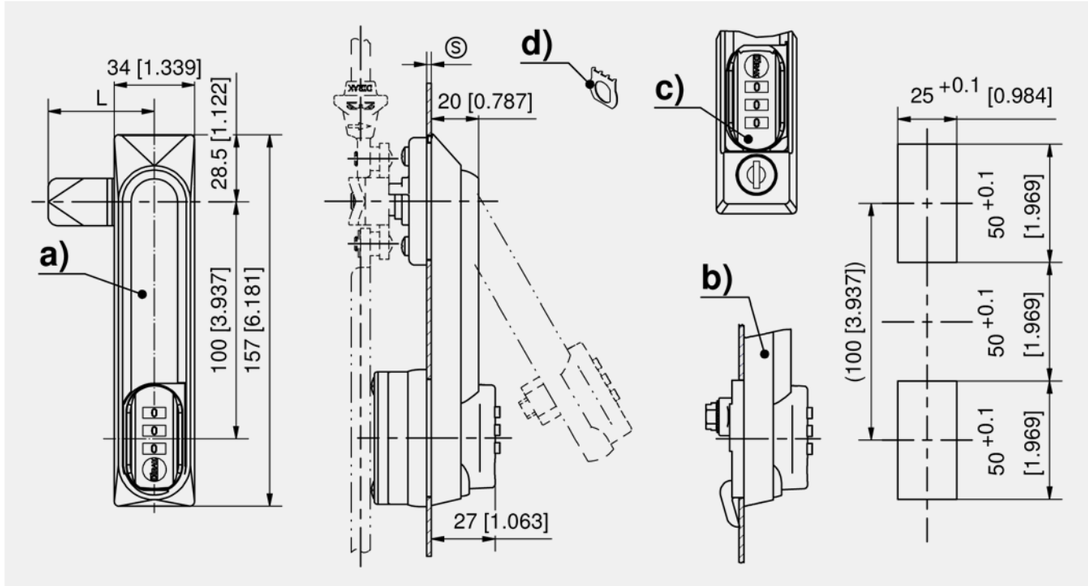

Swinghandle

	Part Number	Latching type	Handle material	Surface handle	Dish	IP protection	Installation type	Delivery Unit
a)	107-9268.00-00000	combination lock	zinc die	chrome plated	with cap	IP65	screw-on	1 pc.
a)	107-9270.00-00000	combination lock	zinc die	black	with cap	IP65	screw-on	1 pc.
b)	107-9269.00-00000	combination lock	zinc die	chrome plated	with hook		screw-on	1 pc.
b)	107-9271.00-00000	combination lock	zinc die	black	with hook		screw-on	1 pc.
c)	107-9277.00-00000	combination lock and keyed alike DIRAK 1333	PA	black	with cap	IP65	screw-on	1 pc.
c)	107-9278.00-00000	combination lock and keyed different	PA	black	with cap	IP65	screw-on	1 pc.

	Accessories
d)	302, 366 3-011 **Grounding Clip Stainless Steel**
f)	294 2-150 **3-Point Cam L45, Rod Control**
f)	175, 295 2-151 **2-, 3- and 4-Point Cam Adapter**
f)	176, 296 2-151.04 **3-Point Cam Adapter**
g)	181, 285 1-181 **Adapter for Round Rods Ø8mm PA**

	Accessories
g)	181, 285 1-181.01 **Adapter for Round Rods Ø8mm / Ø10mm Zinc Die**
h)	179, 283 1-170 **Round Rods with Eye**
h)	180, 284 1-180 **Round Rods for Adapter**
i)	186, 290 1-190 **Rod Guides RS**
i)	187, 291 1-193 **Rod Guide RS**

all product details on DIRAK.com

2-090.02

Swinghandle RS PrC for Inserts

[2-090.03]

Advantages

- Swinghandle with liftable operating lever.
- 90° Closing rotation.
- Swinghandle can be locked with inserts (inserts must be ordered separately).
- IP65 according to DIN EN 60529 - version dish with cap.
- RH / LH application.
- Grounding by grounding nut (optional).

Materials

- **Handle:** zinc die, chrome plated or black or PA, black
- **Dish and cap:** PA, black
- **Shaft:** brass
- **Bearing plate:** zinc die, untreated
- **Seals:** NBR

Remarks

(S) Door-thickness 1.5 - 2.5mm

Drawings for rod calculation (see accessories):

1. stroke 18mm
2. clearance

Alternative products see also 2-090, 2-090.01, 2-090.02, 2-090.04.

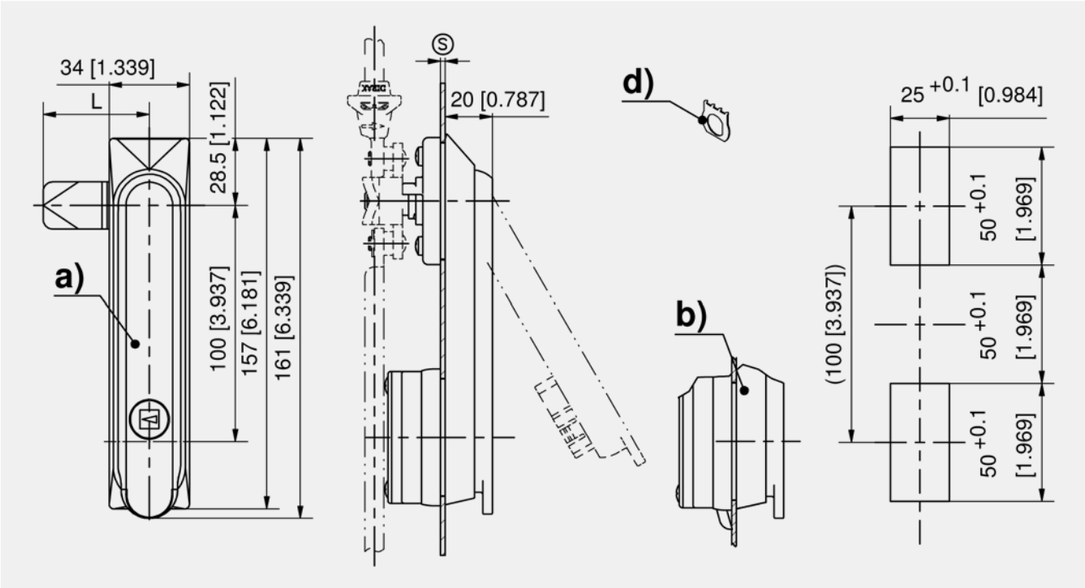

Swinghandle for inserts

	Part Number	Handle material	Surface handle	Dish	IP protection	Installation type	Delivery Unit
a)	207-9244.00-00000	PA	black	with cap	IP65	screw-on	1 pc.
b)	107-9279.00-00000	PA	black	with hook		screw-on	1 pc.
a)	107-9205.00-00000	zinc die	chrome plated	with cap	IP65	screw-on	1 pc.
a)	107-9206.00-00000	zinc die	black	with cap	IP65	screw-on	1 pc.

	Accessories
c)	303 2-141 **Inserts**
d)	302, 366 3-011 **Grounding Clip Stainless Steel**
f)	294 2-150 **3-Point Cam L45, Rod Control**
f)	175, 295 2-151 **2-, 3- and 4-Point Cam Adapter**
f)	176, 296 2-151.04 **3-Point Cam Adapter**
g)	181, 285 1-181 **Adapter for Round Rods Ø8mm PA**
g)	181, 285 1-181.01 **Adapter for Round Rods Ø8mm / Ø10mm Zinc Die**
h)	179, 283 1-170 **Round Rods with Eye**
h)	180, 284 1-180 **Round Rods for Adapter**

	Accessories
i)	186, 290 1-190 **Rod Guides RS**
i)	187, 291 1-193 **Rod Guide RS**
	768 6-100 **Wrench**
	766 6-101 **Universal key**

2-090.03

◂ all product details on DIRAK.com

Swinghandle RS PrC self-locking

[2-090.04]

Advantages

- Swinghandle with liftable operating lever.
- 90° Closing rotation.
- Swinghandle can be locked by detents.
- IP65 according to DIN EN 60529 - version dish with cap.
- RH / LH application.
- Grounding by grounding nut (optional).

Materials

- **Handle, dish and cap:** PA, black
- **Shaft:** brass
- **Bearing plate:** zinc die, untreated
- **Seals:** NBR

Remarks

(S) Door-thickness 1.5 - 2.5mm

Drawings for rod calculation (see accessories):

1. stroke 18mm
2. clearance

Alternative products see also 2-090, 2-090.01, 2-090.02, 2-090.03.

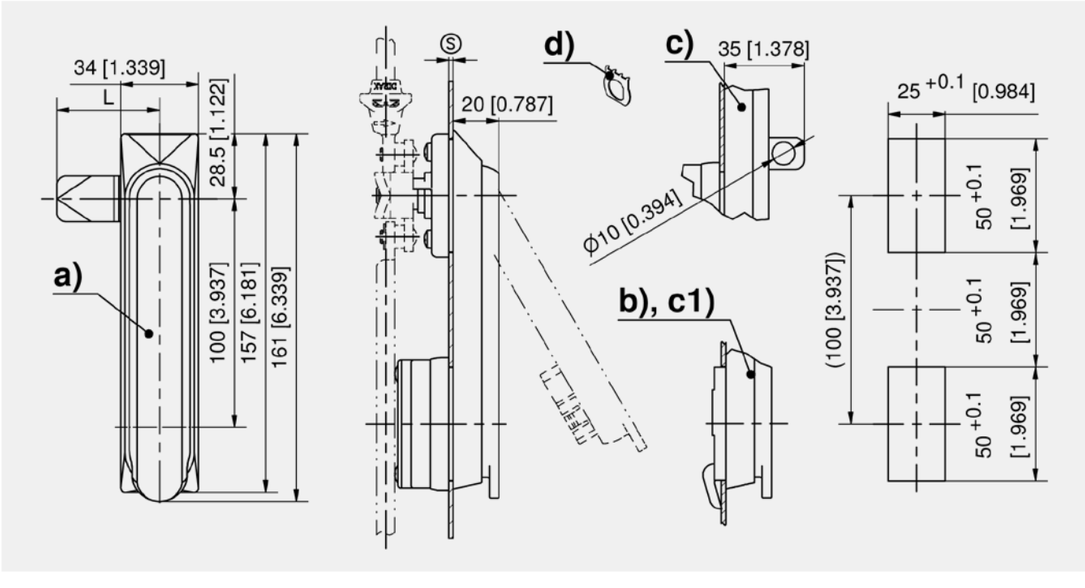

Swinghandle PA, self-locking, handle closed

	Part Number	Dish	Padlock bolt	IP protection	Installation type	Delivery Unit
a)	107-9260.00-00000	with cap		IP65	screw-on	1 pc.
b)	107-9261.00-00000	with hook			screw-on	1 pc.
c)	107-9262.00-00000	with cap	Yes	IP65	screw-on	1 pc.
c1)	107-9263.00-00000	with hook	Yes		screw-on	1 pc.

	Accessories
d)	302, 366 3-011 **Grounding Clip Stainless Steel**
f)	294 2-150 **3-Point Cam L45, Rod Control**
f)	175, 295 2-151 **2-, 3- and 4-Point Cam Adapter**
f)	176, 296 2-151.04 **3-Point Cam Adapter**
g)	181, 285 1-181 **Adapter for Round Rods Ø8mm PA**
g)	181, 285 1-181.01 **Adapter for Round Rods Ø8mm / Ø10mm Zinc Die**
h)	179, 283 1-170 **Round Rods with Eye**
h)	180, 284 1-180 **Round Rods for Adapter**
i)	186, 290 1-190 **Rod Guides RS**
i)	187, 291 1-193 **Rod Guide RS**

all product details ▸ on DIRAK.com

2-090.04

DST Swinghandle RS PrC for Profile-Cylinder [2-090DST]

Advantages

- Swinghandle with liftable operating lever.
- For profile-cylinders to DIN 18252.
- Tool-less installation.
- a) 90° for RH doors with counter-clockwise opening.
- b) 90° for LH doors with clockwise opening.
- c) 180° opening.
- The rotation stop prevents a damaging over-rotation of cam / 3-point cam.
- IP65 according to DIN EN 60529 will be achieved by cap and o-ring.

Materials

- **Swinghandle, dish, cover and cap:** PA6, black
- **O-rings:** NBR Perbunan
- **Hexagon nut and washer:** steel, zinc plated
- **Shaft:** brass, untreated
- **Snap wedges:** sintered steel
- **Stop:** zinc die, untreated

Remarks

1. guide swinghandle with pre-assembled cam through upper cutout.
2. hook-in the lower part of the swinghandle and clip it in at the top.
3. press cap on.

Drawings for rod calculation (see accessories):

1. stroke 18mm
2. clearance

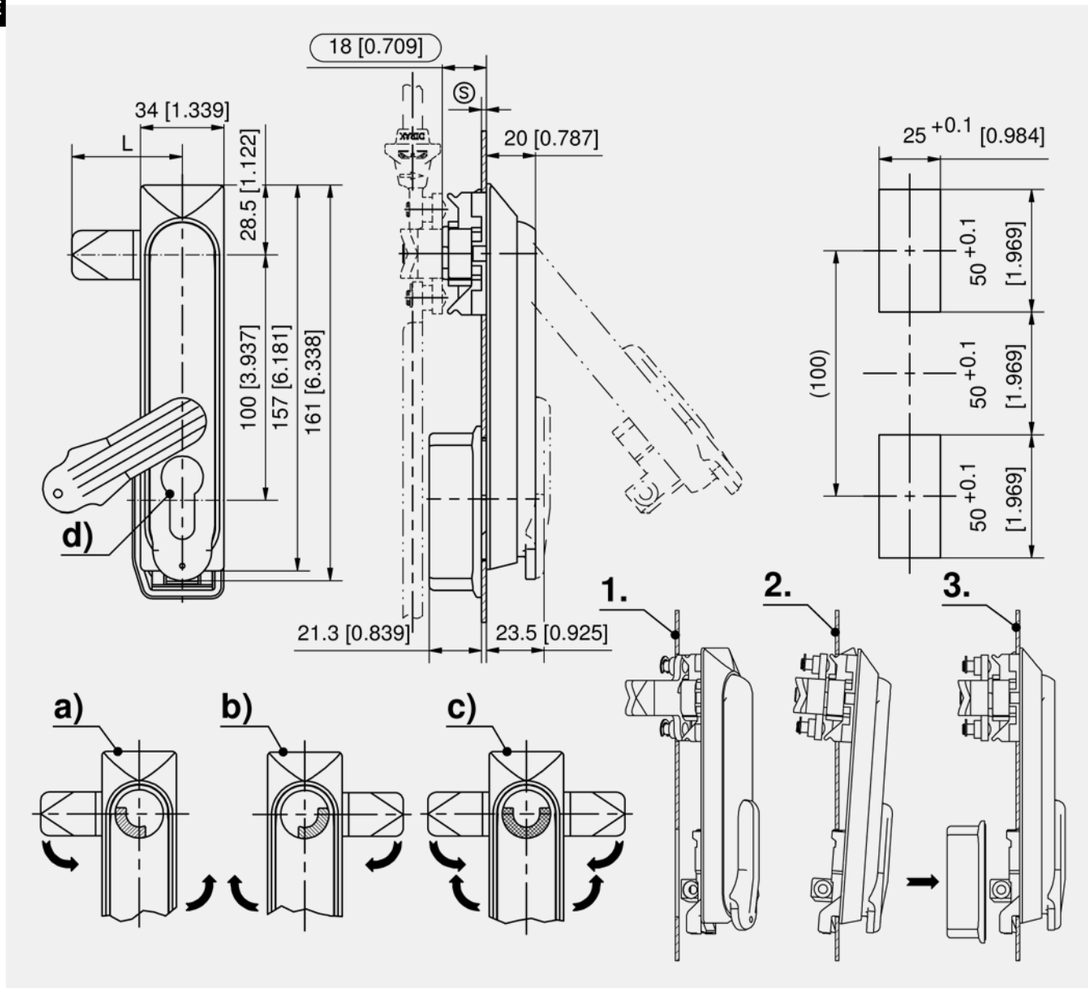

2-090DST

all product details on DIRAK.com

Swinghandle with dust cover, securable

	Part Number	Clamping range (S)	Stop	Installation type	Delivery Unit
a)	407-9505.00-00015	1.3 - 2.0 mm	RH, 90°	tool-less	1 pc.
a)	407-9505.00-00018	1.5 - 2.2 mm	RH, 90°	tool-less	1 pc.
a)	407-9505.00-00020	1.8 - 2.5 mm	RH, 90°	tool-less	1 pc.
b)	407-9507.00-00015	1.3 - 2.0 mm	LH, 90°	tool-less	1 pc.
b)	407-9507.00-00018	1.5 - 2.2 mm	LH, 90°	tool-less	1 pc.
b)	407-9507.00-00020	1.8 - 2.5 mm	LH, 90°	tool-less	1 pc.
c)	407-9509.00-00018	1.5 - 2.2 mm	RH/LH, 90°	tool-less	1 pc.
c)	407-9509.00-00020	1.8 - 2.5 mm	RH/LH, 90°	tool-less	1 pc.
c)	407-9509.00-00015	1.3 - 2.0 mm	RH/LH, 90°	tool-less	1 pc.

Swinghandle without dust cover

	Part Number	Clamping range (S)	Stop	Installation type	Delivery Unit
a)	407-9506.00-00015	1.3 - 2.0 mm	RH, 90°	tool-less	1 pc.
a)	407-9506.00-00018	1.5 - 2.2 mm	RH, 90°	tool-less	1 pc.
a)	407-9506.00-00020	1.8 - 2.5 mm	RH, 90°	tool-less	1 pc.
b)	407-9508.00-00015	1.3 - 2.0 mm	LH, 90°	tool-less	1 pc.
b)	407-9508.00-00018	1.5 - 2.2 mm	LH, 90°	tool-less	1 pc.
b)	407-9508.00-00020	1.8 - 2.5 mm	LH, 90°	tool-less	1 pc.
c)	407-9510.00-00015	1.3 - 2.0 mm	RH/LH, 90°	tool-less	1 pc.
c)	407-9510.00-00018	1.5 - 2.2 mm	RH/LH, 90°	tool-less	1 pc.
c)	407-9510.00-00020	1.8 - 2.5 mm	RH/LH, 90°	tool-less	1 pc.

	Accessories
d)	304, 388 2-140 **Profile-Cylinder DIN 18252**
f)	294 2-150 **3-Point Cam L45, Rod Control**
f)	175, 295 2-151 **2-, 3- and 4-Point Cam Adapter**
f)	176, 296 2-151.04 **3-Point Cam Adapter**
g)	181, 285 1-181 **Adapter for Round Rods Ø8mm PA**
g)	181, 285 1-181.01 **Adapter for Round Rods Ø8mm / Ø10mm Zinc Die**
h)	179, 283 1-170 **Round Rods with Eye**
h)	180, 284 1-180 **Round Rods for Adapter**
i)	186, 290 1-190 **Rod Guides RS**
i)	187, 291 1-193 **Rod Guide RS**
	301 2-091 **Sliding Cap**

Swinghandle RS PrC Stainless Steel

[7-065]

Advantages

- For cutout C and round rods.
- Swinghandle with liftable operating lever.
- 90° Closing rotation.
- Can be locked with 40mm long profile-cylinders (DIN 18252) with 45° or 90° closing rotation.
- IP65 according to DIN EN 60529.
- RH / LH application.
- The opening in the dish can be filled with a rectangular blanking plate.
- Grounding by grounding clip (optional).

Materials

- **Swinghandle, dish, padlock bolt and dust cover:** AISI 316
- **Swinghandle shaft:** AISI 303
- **Blanking plate, pinion drive and cam:** AISI 304
- **Cap:** PA, black

Remarks

(S) Door-thickness 1.5 - 2.5mm

1. stroke 18mm
2. length L
3. clearance

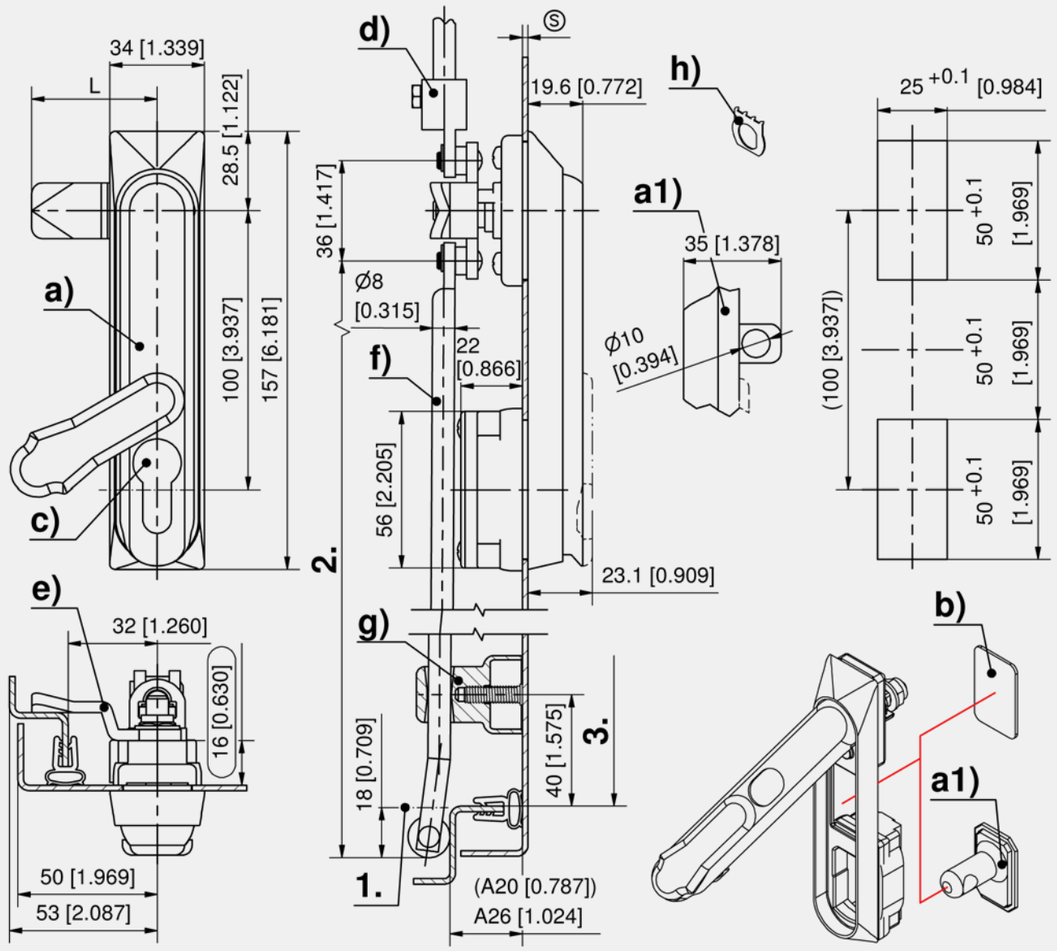

7-065

all product details on DIRAK.com

Formula for rods with eye and rollers:
cutout in the door center (rod length varies)

$$L\,2. = \frac{\text{upper rod clearance-12mm[0.472]}}{2\,[0.079]} - 50\text{ mm}\,[1.969] \qquad L\,2. = \frac{\text{lower rod clearance-12mm[0.472]}}{2\,[0.079]} + 50\text{ mm}[1.969]$$

cutout outside the door center (rod length equal)

$$L\,2. = \frac{\text{clearance-12mm[0.472]}}{2[0.079]}$$

Swinghandle for profile-cylinder

	Part Number	Version	Padlock	Installation type	Delivery Unit
a)	207-9294.00-00000	without cylinder dustcover		screw-on	1 pc.
a)	207-9295.00-00000	with cylinder dustcover		screw-on	1 pc.
a1)	107-9284.00-00000	without cylinder dustcover	Yes	screw-on	1 pc.
a1)	107-9285.00-00000	with cylinder dustcover	Yes	screw-on	1 pc.

Accessories Swinghandles

	Part Number	Name	Delivery Unit
b)	207-2506.80-00000	Blanking plate for opening	1 pc.

Rod control

	Part Number	Stop	Delivery Unit
e)	207-9598.00-00000	Yes	1 pc.

3- or 4-point cams, L45

	Part Number	A-dimension	Stop	Delivery Unit
e)	207-9845.00-00022	20 mm	Yes	1 pc.
e)	207-9845.00-00028	26 mm	Yes	1 pc.

	Accessories	
c)	304, 388	2-140 **Profile-Cylinder DIN 18252**
c)	306, 387	7-069 **Profile-Cylinder Stainless Steel**
d)	181, 285	1-181.01 **Adapter for Round Rods Ø8mm / Ø10mm Zinc Die**
f)	182, 286	7-106 **Round Rods Stainless Steel**
g)	186, 290	200-3623.51-00000 **Rod guide**
g)	186, 290	200-3625.51-00000 **Rod guide**
h)	302, 366	3-011 **Grounding Clip Stainless Steel**

NT Swinghandle RS PrC Stainless Steel

[7-066]

Advantages

- Extremly narrow gap.
- 135° Closing rotation.
- The flush design prevents this swinghandle being used as climbing support.
- Locking cylinder fitted in the dish and protected against being forced through.
- Bolted internal cap is made of stainless steel.
- Stroke 35 mm by 3-point cam adapter 45°.
- IP65 according to DIN EN 60529.
- RH / LH application.
- (b) Cylinder cover screwable by M3x6, drive TX10.

Materials

- **Swing handle, dish, cap, locking bolt and rotating disk :** AISI 316
- **Cap sealing and o-ring:** NBR
- **Washer:** PTFE- Teflon
- **Spring:** AISI 301
- **Locking bolt:** stainless steel AISI 316
- **Screws, grooved pin, pin with axial knurl and nut:** stainless steel

Remarks

(S) Door-thickness 1.5 - 2.5mm

1. stroke 35mm
2. length L
3. clearance

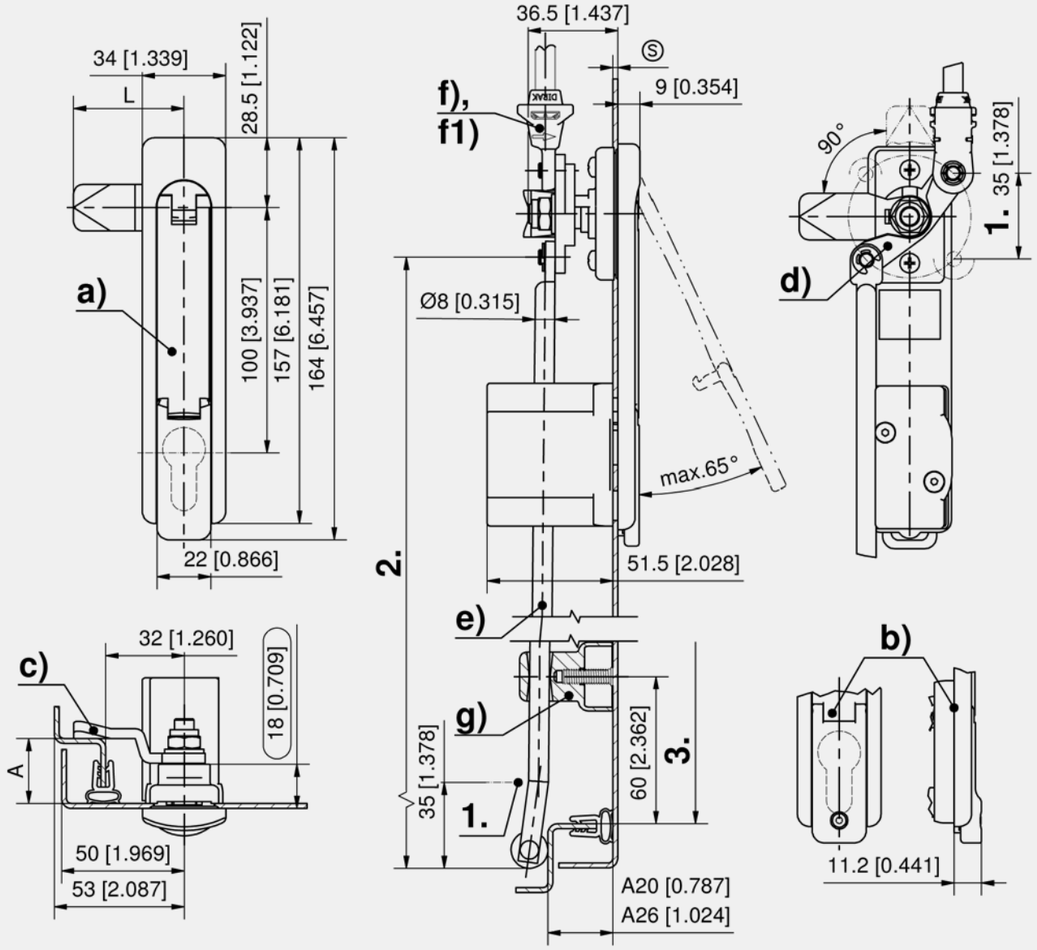

7-066

all product details on DIRAK.com

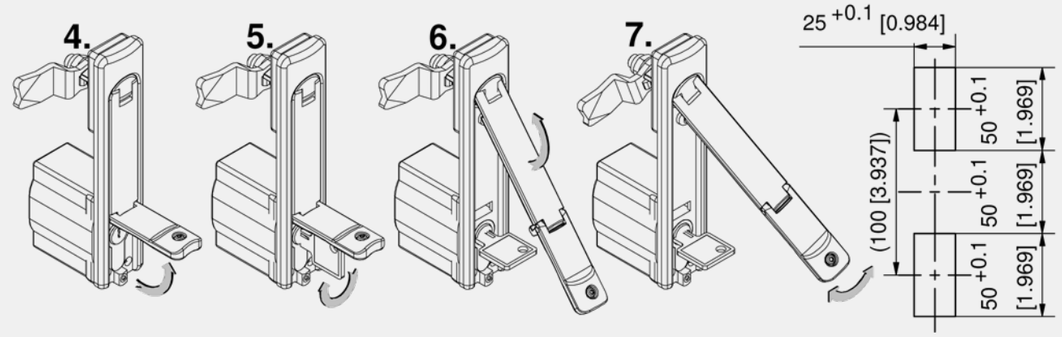

Formula for rods with eye and rollers:
cutout in the door center (rod length varies)

upper rod

$$L\ 2. = \frac{3.\text{clearance}-12\text{mm}[0.472]}{2\ [0.079]} - 50\text{mm}\ [1.969]$$

lower rod

$$L\ 2. = \frac{3.\text{clearance}-12\text{mm}[0.472]}{2\ [0.079]} + 50\ \text{mm}\ [1.969]$$

cutout outside the door center (rod length equal)

$$L\ 2. = \frac{3.\text{clearance}-12\text{mm}[0.472]}{2[0.079]}$$

Swinghandle for profile cylinder

	Part Number	Version	Installation type	Delivery Unit
a)	307-9302.00-00000		screw-on	1 pc.
b)	307-9305.00-00000	cover screw down	screw-on	1 pc.

+	Accessories
c)	156 7-105 **Cams L35/45 Stainless Steel**
d)	299 7-106.01 **3-Point Cam Adapter 45° Stainless Steel**
e)	182, 286 7-106 **Round Rods Stainless Steel**
f)	181, 285 1-181 **Adapter for Round Rods Ø8mm PA**
f1)	181, 285 1-181.01 **Adapter for Round Rods Ø8mm / Ø10mm Zinc Die**
g)	186, 290 200-3623.51-00000 **Rod guide**
g)	186, 290 200-3625.51-00000 **Rod guide**
	304, 388 211-9004.00-00000 **DIRAK Profile-cylinder**
	304, 388 211-9003.00-00000 **DIRAK Profile-cylinder**

Swinghandle RS PrC with Square Threaded Rod [2-092]

Advantages

- Square threaded rod 40mm for adjustable single or 3-point cams.
- Adjustability of the cam by catch for standard cams 2-151.02 and 3-point cam adapter with H-dimendion adjustment 2-151.01.
- Adjustment possible at any time (e.g. compressed sealing).
- Dish with hook.
- IP65 according to DIN EN 60529.
- RH / LH application.
- Grounding by grounding nut (optional).
- Pre-assembled without cam.
- Version keyed alike is supplied with 2 keys.

Materials

- **Handle, dish and cylinder dustcover:** see table
- **Square threaded rod**: zinc die, nickel plated
- **Bearing plate:** zinc die, untreated
- **Cap:** PA, black
- **Seals:** NBR

Remarks

(S) Door-thickness 1.5 - 2.5mm

1. stroke 18mm

2. clearance

Further information on the swing handles can be found on pages 2-090, 2-090.01 and 2-090.03. If you need variants which are not listed here, please contact us.

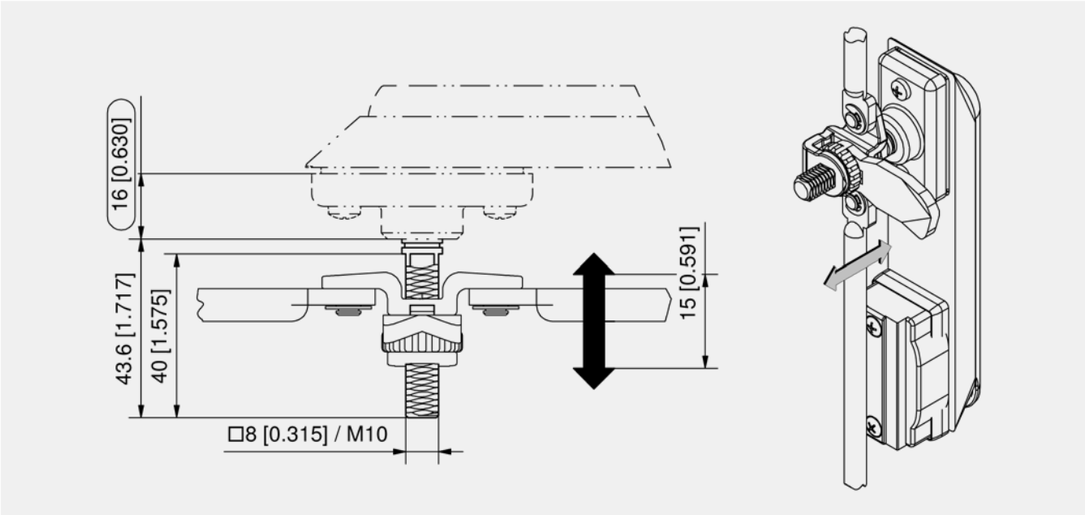

Swinghandle with square threaded rod

Part Number	Latching type	Handle material	Surface handle	Dish material	Surface dish	Cylinder cover material	Securable	Padlock bolt	Installation type	Delivery Unit
207-9282.00-00040	for PHZ	PA	black	PA	black				screw-on	1 pc.
107-9208.00-00040	for PHZ	zinc die	black	zinc die	black	zinc die	Yes		screw-on	1 pc.
107-9282.00-00040	for PHZ	zinc die	black	PA	black			Yes	screw-on	1 pc.
207-9238.00-00040	keyed alike DIRAK 1333	PA	black	PA	black				screw-on	1 pc.
207-9244.00-00040	for insert	PA	black	PA	black				screw-on	1 pc.
107-9206.00-00040	for insert	zinc die	chrome plated	PA	black				screw-on	1 pc.

	Accessories
	304, 388 2-140 **Profile-Cylinder DIN 18252**
	303 2-141 **Inserts**
	173, 300 2-151.02 **H-Dimension Adjustment**
f)	154, 292 1-102 **Cams L35/45 Steel**
f)	178, 298 2-151.01 **3-Point Adapter with H-Dimension Adjustment**
g)	181, 285 1-181 **Adapter for Round Rods Ø8mm PA**
g)	181, 285 1-181.01 **Adapter for Round Rods Ø8mm / Ø10mm Zinc Die**
h)	179, 283 1-170 **Round Rods with Eye**
h)	180, 284 1-180 **Round Rods for Adapter**
i)	184, 288 1-191 **Height-adjustable Rod Guide RS**

Function extension
302, 366 3-011 **Grounding Clip Stainless Steel**

2-092

all product details on DIRAK.com

Dual-Key Cylinder Swinghandle RS 105 PA

See page 258

Swinghandle base PrC

[3-400]

Advantages

- Tool-less assembly.
- Tool-less pre-installation, self-locking (clip-in) in sheet metal with thickness of 1.5 or 2.0mm.
- Independent of panel thickness up to 3mm.
- Closing with slam latch.
- Handle with lifting spring.
- For profile-cylinder with closing position 6 o'clock.
- Tool-less replacement of the cylinder cover.
- IP65 according to DIN EN 60529 by sealing kit (optional).
- RH / LH application.

Materials

- **Handle, Dish, cap and cylinder dustcover:** PA, black
- **Padlock bolt:** zinc die, zinc plated
- **Shaft:** Grivory
- **Slam lock:** POM
- **Spring:** steel

Remarks

(S) Door-thickness 1.5 - 2.0mm

f) LED module retrofittable

Padlock version **not** in combination with LED-Module useable

Rod latch and cam adapter is **not** combinable with negativly cranked cams.

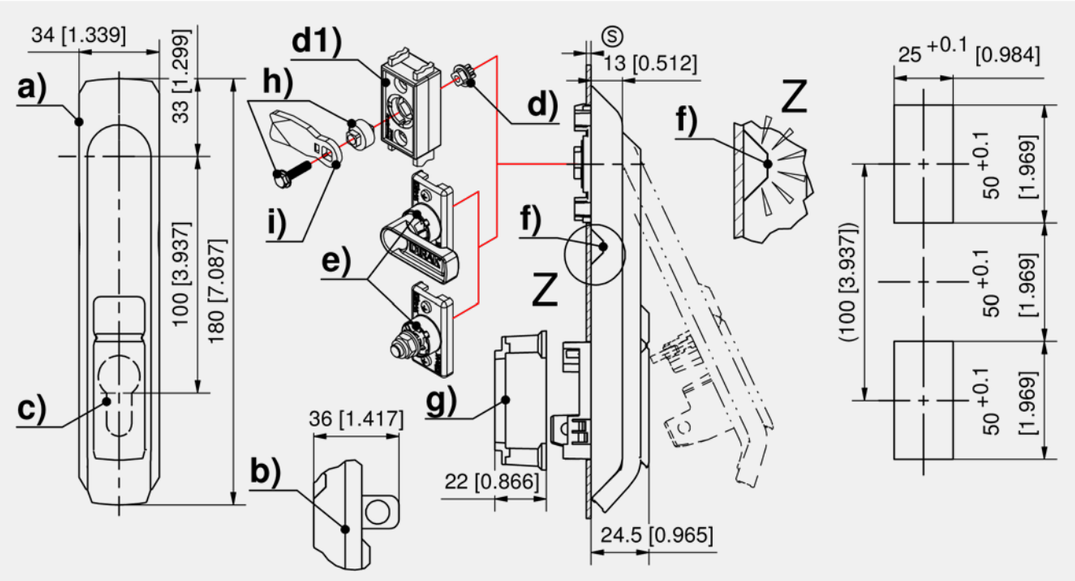

Swinghandle PA, black for profile-cylinder

	Part Number	Version	Latching type	Padlock bolt	Installation type	Delivery Unit
a)	307-9101.00-00000		PHZ 40mm		screw-on	120 pcs.
b)	307-9102.00-00000		PHZ 40mm	Yes	screw-on	1 pc.
a)	307-9103.00-00000	with blind plug	self-locking		screw-on	120 pcs.
b)	307-9104.00-00000	with blind plug	self-locking	Yes	screw-on	1 pc.

Accessories

c) 304, 388 211-9003.00-00000 **DIRAK Profile-cylinder**
c) 304, 388 211-9004.00-00000 **DIRAK Profile-cylinder**
d1) 361 208-9002.00-00000 **Rod latch**
d1) 361 208-9003.00-00000 **Rod latch**
i) 154, 292 1-102 **Cams L35/45 Steel**

Function extension

g) 307-9153.00-00000 **Sealing kit + Cap**

Specific accessories

c) 248 3-410 **Carrier base**
d) 307-9154.00-00000 **Rod latch adapter**
e) 249 3-440 **Bearing Plate RS base**
f) 307-9151.00-00000 **LED Module**
f) 307-9152.00-00000 **LED Module**
h) 375 208-9409.00-00000 **Cam adapter with serrated screw M5x20**

3-400

◂ all product details on DIRAK.com

Swinghandle base with LED Module PrC

[3-400E]

Advantages

- LED module visualises the locking position and regular red flashing indicates open position.
- Tool-less assembly.
- Tool-less pre-installation, self-locking (clip-in) in sheet metal with thickness of 1.5 or 2.0mm.
- Independent of panel thickness up to 3mm.
- Closing with slam latch.
- Handle with lifting spring.
- For profile-cylinder with closing position 6 o'clock.
- Tool-less replacement of the cylinder cover.
- IP65 according to DIN EN 60529 by sealing kit (optional).
- RH / LH application.

Materials

- **Handle, dish, cap:** PA, black
- **Cylinder dustcover:** PA, black 7043
- **Shaft:** Grivory
- **Slam lock:** POM
- **LED carrier plate:** PMMA
- **Spring:** steel

Remarks

(S) Door-thickness 1.5 - 2.0mm

1. flashing LED module

Battery CR2032 3V **not** included

Rod latch and cam adapter is **not** combinable with negativly cranked cams.

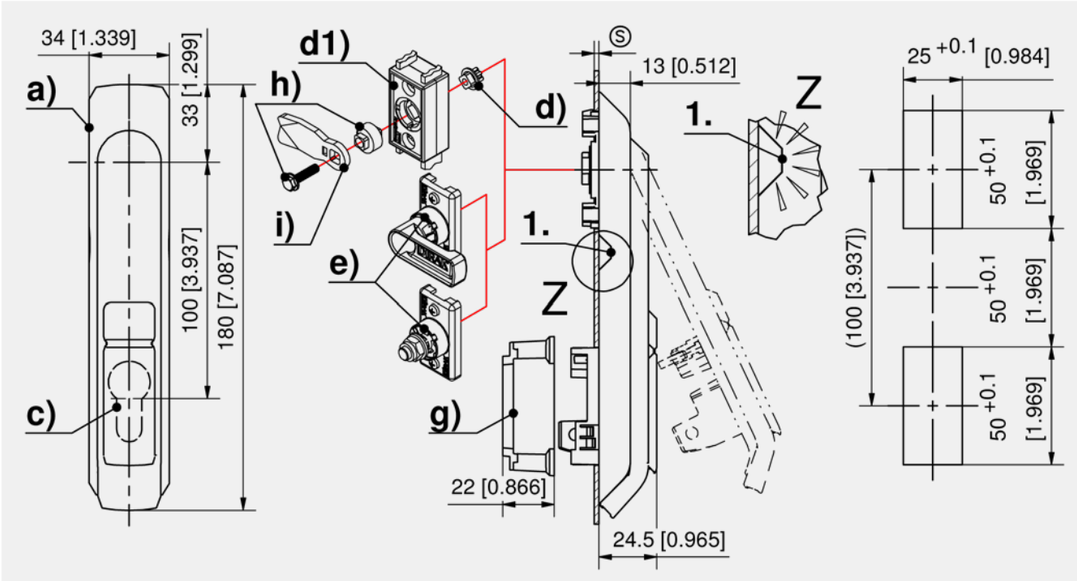

Swinghandle PA, black, for profile-cylinder with LED module

	Part Number	Version	Latching type	Installation type	Delivery Unit
a)	307-9105.00-00000		PHZ 40mm	screw-on	1 pc.
a)	307-9106.00-00000	with blind plug	self-locking	screw-on	1 pc.

Accessories

c) 304, 388 211-9004.00-00000 **DIRAK Profile-cylinder**
c) 304, 388 211-9003.00-00000 **DIRAK Profile-cylinder**
d1) 361 208-9003.00-00000 **Rod latch**
d1) 361 208-9002.00-00000 **Rod latch**
i) 154, 292 1-102 **Cams L35/45 Steel**

Function extension

g) 307-9153.00-00000 **Sealing kit + Cap**

Specific accessories

c) 248 3-410 **Carrier base**
d) 307-9154.00-00000 **Rod latch adapter**
e) 249 3-440 **Bearing Plate RS base**
h) 375 208-9409.00-00000 **Cam adapter with serrated screw M5x20**

all product details ▸ on DIRAK.com

3-400E

Carrier base

[3-410]

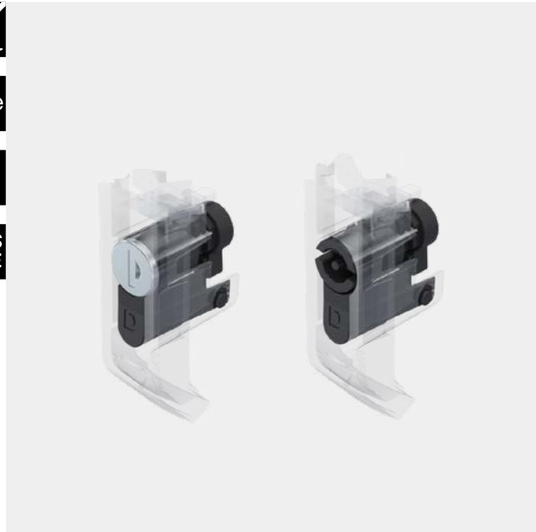

Advantages

- Carrier for swinghandle base.
- With insert or cylinder barrel.
- Cam moves clockwise from 11 to 12 o'clock.
- Tool-less installation - simply snap into the swinghandle base cutout.

Materials

- **Carrier, insert, cam:** PA, black
- **Cylinder barrel:** zinc die, untreated

Remarks

1. press the clamp together
2. push the carrier into the cutout until it audible clicks into place.
3. turn the insert clockwise up to the stop. Then the final position of the cam is reached.
4. to open the swinghandle the insert has to be turned clockwise by 15° only. The slam lock of the swinghandle always aligns the insert straight.

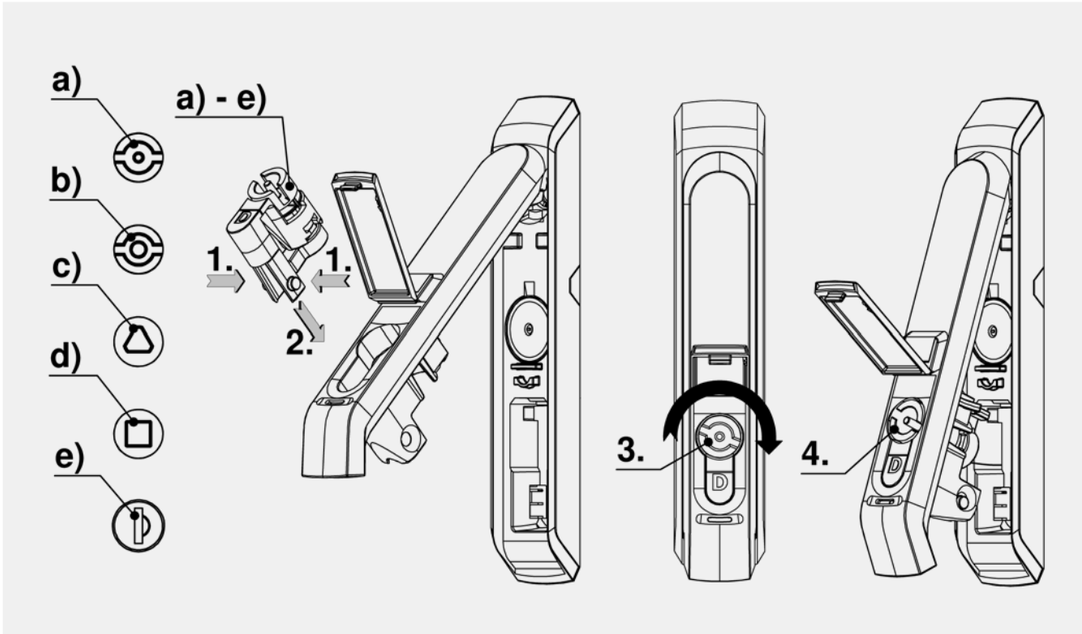

Carrier with insert

	Part Number	Insert	Installation type	Delivery Unit
a)	307-9501.00-00000	Double bit 3mm pin	tool-less	1 pc.
b)	307-9502.00-00000	Double bit 5mm pin	tool-less	1 pc.
c)	307-9503.00-00000	Triangular 8mm	tool-less	1 pc.
d)	307-9504.00-00000	Square 8mm	tool-less	1 pc.

Carrier with key cylinder

	Part Number	Latching type	Installation type	Delivery Unit
e)	307-9505.00-01333	keyed alike DIRAK 1333	tool-less	1 pc.
e)	307-9506.00-09999	keyed different	tool-less	1 pc.

3-410

◂ all product details on DIRAK.com

Bearing Plate RS base

[3-440]

Advantages

- RH / LH application.
- Pre-installation onto swinghandle base by clip-on.
- Final fastening by screws (included).
- **a)** bearing plate for single-point latching system with PA cam (H20 / H26) for swinghandle base.
- Assembly of the cam by bayonet system clicks in audible.
- **b)** bearing plate with adapter for single- or multi-point locking system for standard cams and 3-point cam adapter.
- Cams will be secured by self-securing nut M8 onto the square (max. bolting torque 4Nm).

Materials

- **Bearing plate and cam:** PA, black
- **Adapter:** zinc die, untreated

Remarks

Independent of panel thickness from 0.5 to 3mm.

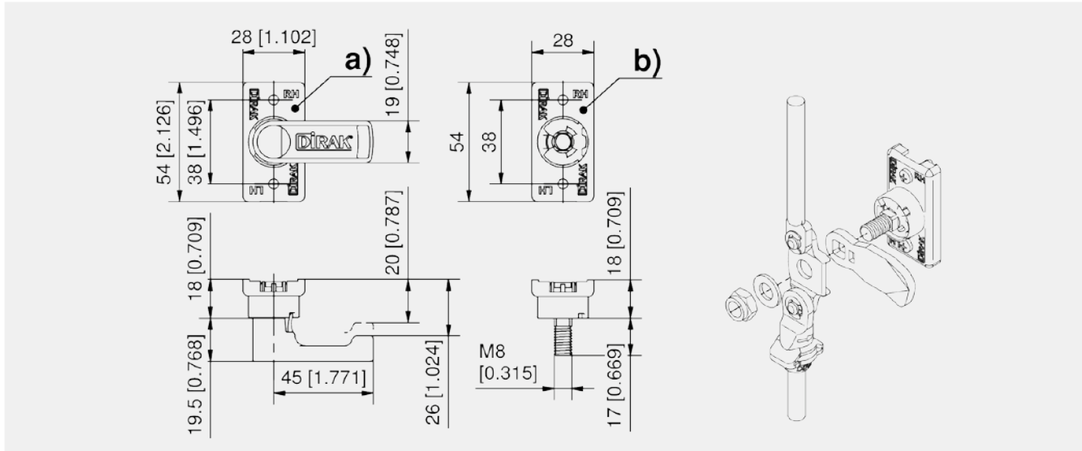

Bearing plate

	Part Number	Version	Delivery Unit
a)	308-9007.00-00000	with cam H20	1 pc.
a)	308-9008.00-00000	with cam H26	1 pc.
b)	308-9006.00-00000	with adapter	1 pc.

	Accessories
154, 292	1-102 **Cams L35/45 Steel**
175, 295	2-151 **2-, 3- and 4-Point Cam Adapter**
176, 296	2-151.04 **3-Point Cam Adapter**
179, 283	1-170 **Round Rods with Eye**
180, 284	1-180 **Round Rods for Adapter**
181, 285	1-181 **Adapter for Round Rods Ø8mm PA**
181, 285	1-181.01 **Adapter for Round Rods Ø8mm / Ø10mm Zinc Die**
186, 290	1-190 **Rod Guides RS**

all product details ▸ on DIRAK.com

3-440

Swinghandle RS 90

[2-120]

IP 65

RoHS WEEE

Advantages

- Swinghandle for sheet metal and plastic enclosures with liftable operating lever.
- 90° Closing rotation.
- The swinghandle is locked by a profile-cylinder with 45° or 90° locking bar position, a cylinder or an insert.
- Protective insulated for installation in plastic enclosures.
- IP65 according to DIN EN 60529.
- RH / LH application.

Materials

- **Swinghandle, dish and cap:** PA, black
- **Cover:** PA, black or zinc die, black
- **Adapter:** zinc die, untreated

Remarks

(S) Door-thickness max. 3mm

Drawings for rod calculation (see accessories):

1. stroke 18mm
2. clearance

Please note: when using the adapter, the swinghandle is no longer IP65 standards.

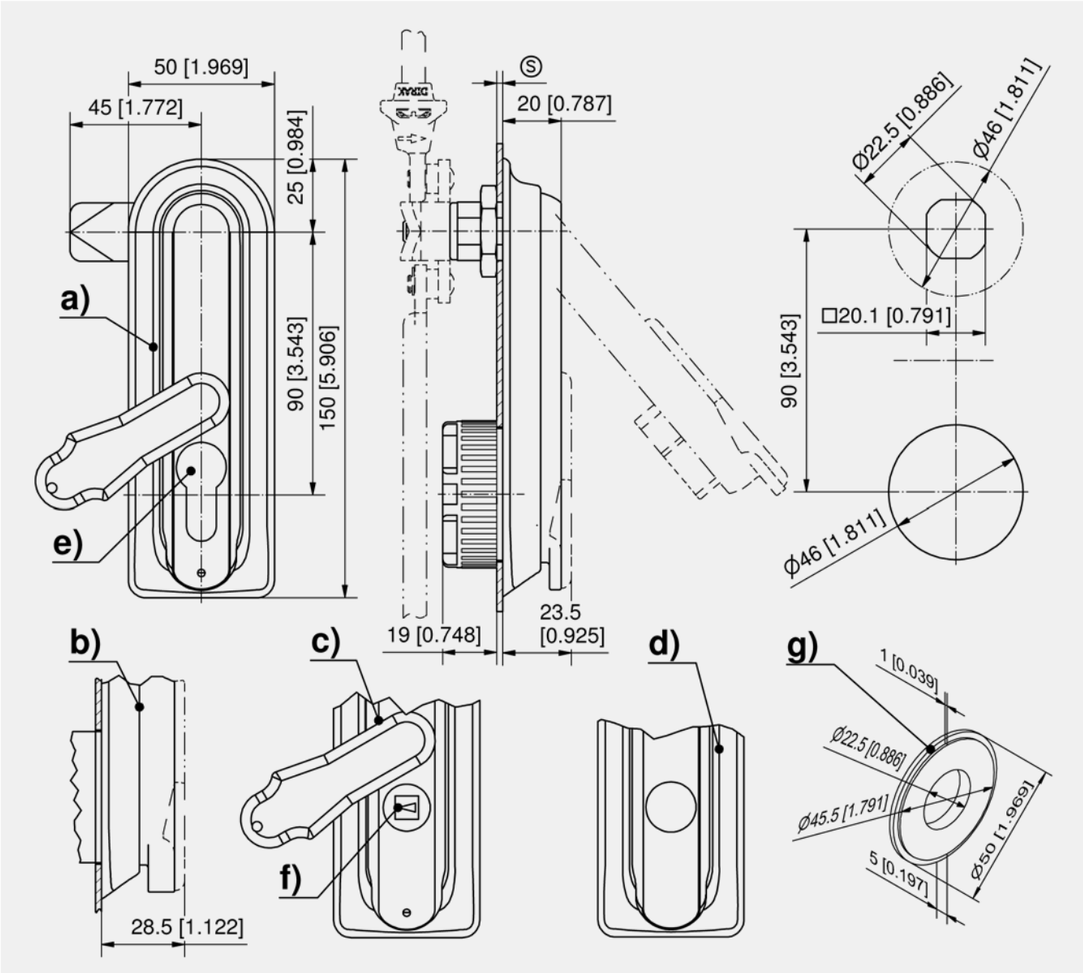

Swinghandle for profile-cylinder 40mm

	Part Number	Cylinder cover material	Reinforced dustcover	Securable	Installation type	Delivery Unit
a)	107-9401.00-00000				screw-on	1 pc.
a)	107-9402.00-00000	PA		Yes	screw-on	1 pc.
a)	107-9403.00-00000	PA	Yes	Yes	screw-on	1 pc.
a)	107-9404.00-00000	zinc die		Yes	screw-on	1 pc.

Swinghandle for profile-cylinder 45mm

	Part Number	Cylinder cover material	Reinforced dustcover	Securable	Installation type	Delivery Unit
b)	107-9405.00-00000				screw-on	1 pc.
b)	107-9406.00-00000	PA		Yes	screw-on	1 pc.
b)	107-9407.00-00000	PA	Yes	Yes	screw-on	1 pc.
b)	107-9408.00-00000	zinc die		Yes	screw-on	1 pc.

Swinghandle for inserts

	Part Number	Cylinder cover material	Reinforced dustcover	Securable	Installation type	Delivery Unit
c)	107-9422.00-00000				screw-on	1 pc.
c)	107-9423.00-00000	PA		Yes	screw-on	1 pc.
c)	107-9424.00-00000	PA	Yes	Yes	screw-on	1 pc.
c)	107-9425.00-00000	zinc die		Yes	screw-on	1 pc.

Swinghandle clip-in, handle with plug

	Part Number	Version	Installation type	Delivery Unit
d)	107-9421.00-00000	without lock	screw-on	1 pc.

	Accessories
e)	304, 388 2-140 **Profile-Cylinder DIN 18252**
f)	303 2-141 **Inserts**
g)	207-2701.03-00000 **Adapter for cutout Ø46mm**
g)	207-2804.00-00000 **Gasket for adapter Ø46**
i)	294 2-150 **3-Point Cam L45, Rod Control**
i)	175, 295 207-9595.00-00000 **Adapter for 3-point cam**
i)	175, 295 207-9596.00-00000 **Adapter for 3-point cam**
m)	181, 285 1-181 **Adapter for Round Rods Ø8mm PA**
m)	181, 285 1-181.01 **Adapter for Round Rods Ø8mm / Ø10mm Zinc Die**
n)	179, 283 1-170 **Round Rods with Eye**
n)	180, 284 1-180 **Round Rods for Adapter**
o)	186, 290 1-190 **Rod Guides RS**
o)	185, 289 1-192 **Rod Guides RS**
o)	184, 288 1-191 **Height-adjustable Rod Guide RS**
o)	187, 291 1-193 **Rod Guide RS**

2-120
all product details on DIRAK.com

Swinghandle RS 105 for PHZ and KABA-Cylinder [2-100.01]

IP 65

RoHS WEEE

Advantages

- Swinghandle with 90° closing rotation.
- Fully insulated.
- Use of profile-cylinder according to DIN 18252.
- Use of KABA-cylinder.
- Use of Padlocks.
- IP65 according to DIN EN 60529.
- RH / LH application.

Materials

- **Swinghandle:** PA, black or grey RAL 7032
- **Padlock eye:** stainless steel

Remarks

(S) Door-thickness max. 3mm

Drawings for rod calculation (see accessories):

1. stroke 18mm
2. clearance

Please note: When using the adapter 207-2701.03-00000 the swinghandle is **no** longer water and dust tight according to IP65 standards

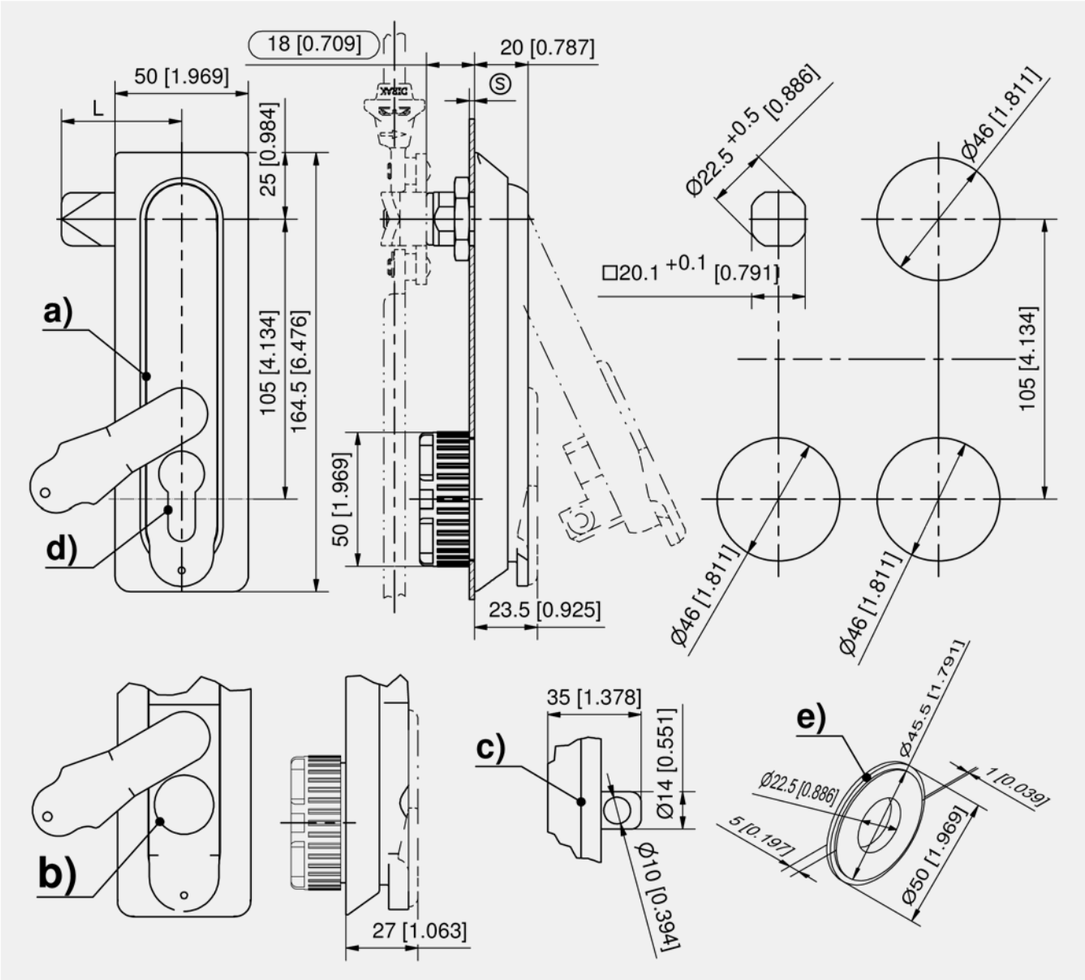

2-100.01

all product details on DIRAK.com

Swinghandle, PA

	Part Number	Latching type	Surface handle	Cylinder cover	Reinforced dustcover	Padlock bolt	Securable	Installation type	Delivery Unit
a)	207-9101.00-00000	PHZ 40mm	black					screw-on	1 pc.
a)	207-9102.00-00000	PHZ 40mm	black	Yes			Yes	screw-on	1 pc.
a)	207-9103.00-00000	PHZ 45mm	black	Yes			Yes	screw-on	1 pc.
b)	207-9109.00-00000	KABA-cylinder	black					screw-on	1 pc.
b)	207-9110.00-00000	KABA-cylinder	black	Yes			Yes	screw-on	1 pc.
b)	207-9111.00-00000	KABA-cylinder	black	Yes	Yes		Yes	screw-on	1 pc.
b)	207-7043.00-00000	KABA-cylinder	grey RAL 7032	Yes			Yes	screw-on	1 pc.
b)	207-7080.00-00000	KABA-cylinder	grey RAL 7032					screw-on	1 pc.
b)	207-7081.00-00000	KABA-cylinder	grey RAL 7032	Yes	Yes		Yes	screw-on	1 pc.
c)	207-9112.00-00000	PHZ 40mm	black			Yes		screw-on	1 pc.

	Accessories
d)	304, 388 2-140 **Profile-Cylinder DIN 18252**
e)	207-2701.03-00000 **Adapter for cutout Ø46mm**
e1)	207-2804.00-00000 **Gasket for adapter Ø46**
f)	175, 295 207-9595.00-00000 **Adapter for 3-point cam**
f)	175, 295 207-9596.00-00000 **Adapter for 3-point cam**
f)	294 2-150 **3-Point Cam L45, Rod Control**
g)	181, 285 1-181 **Adapter for Round Rods Ø8mm PA**
g)	181, 285 1-181.01 **Adapter for Round Rods Ø8mm / Ø10mm Zinc Die**
h)	179, 283 1-170 **Round Rods with Eye**
h)	180, 284 1-180 **Round Rods for Adapter**
i)	186, 290 1-190 **Rod Guides RS**
i)	184, 288 1-191 **Height-adjustable Rod Guide RS**
i)	185, 289 1-192 **Rod Guides RS**
i)	187, 291 1-193 **Rod Guide RS**

Swinghandle RS 105 for PHZ, RC II

[2-102]

RC2 | R L | IP 65 | RoHS WEEE

Advantages

- Swinghandle with liftable operating lever, 90° Closing operation.
- For profile-cylinders 40 and 45mm.
- (**1.**) If a profile-cylinder 40mm is used, the cylinder is located 5mm lower in the operating lever.
- Lockable with profile-cylinder 45° or 90° cam position.
- Complies with security test DIN EN 1630 RCII.
- Secured with a bolt against vandalism.
- Saw up difficult because of steel insert (HRC 45).
- Seismic-proof according to GR-63-CORE, Issue 4.
- IP65 according to DIN EN 60529.
- RH / LH application.

Materials

- **Swinghandle, fastener, dish, dust cover and cap:** zinc die, black
- **Bolt:** AISI 316
- **Shaft:** brass
- **Washer, nut and screw:** steel, zinc plated
- **Flat external seal:** NBR/ Fiber

Remarks

(S) Door-thickness max. 3mm

Drawings for rod calculation (see accessories):

1. stroke 18mm, 2. clearance

To get the same design for RH and LH doors it is possible to make two cutouts with □46 symmetrically to the middle of the door.

For swinghandles with mechatronic locking control see www.elinebydirak.de.

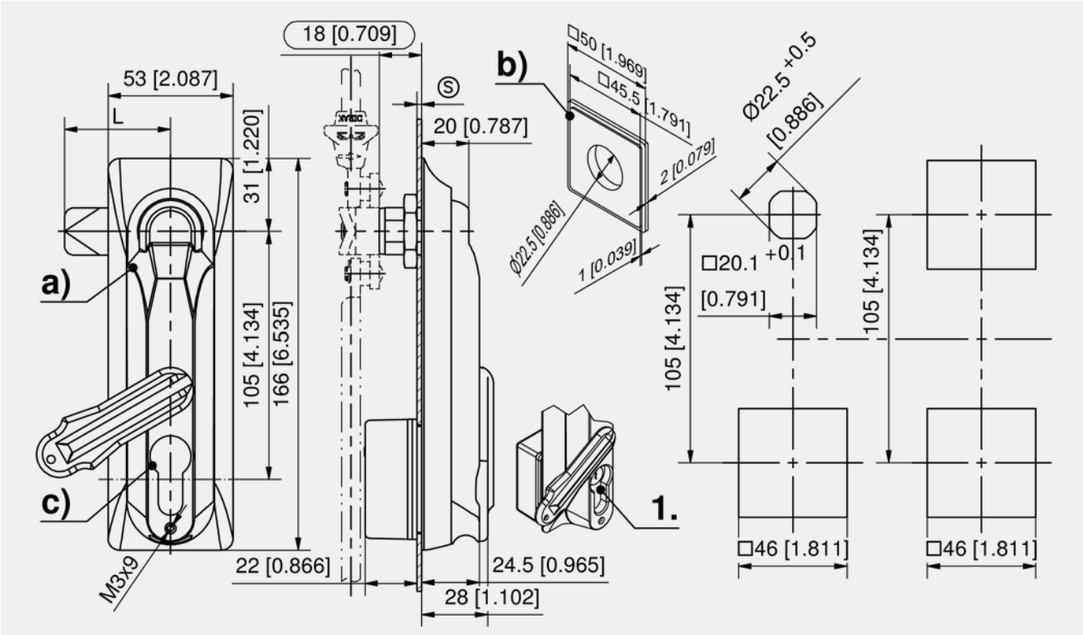

Swinghandle for PHZ, RC II tested

	Part Number	Internal cover	Cylinder cover material	Securable	Installation type	Delivery Unit
a)	207-9129.00-00000	□46	zinc die	Yes	screw-on	1 pc.

	Accessories
b)	602-0016.35-00000 **Square adapter**
b1)	207-2803.00-00000 **Gasket for adapter □46mm**
c)	304, 388 211-9003.00-00000 **DIRAK Profile-cylinder**
c)	304, 388 211-9004.00-00000 **DIRAK Profile-cylinder**
f)	294 2-150 **3-Point Cam L45, Rod Control**
f)	175, 295 207-9595.00-00000 **Adapter for 3-point cam**
f)	175, 295 207-9596.00-00000 **Adapter for 3-point cam**
g)	181, 285 1-181 **Adapter for Round Rods Ø8mm PA**
g)	181, 285 1-181.01 **Adapter for Round Rods Ø8mm / Ø10mm Zinc Die**

	Accessories
h)	179, 283 1-170 **Round Rods with Eye**
h)	180, 284 1-180 **Round Rods for Adapter**
i)	186, 290 1-190 **Rod Guides RS**
i)	184, 288 1-191 **Height-adjustable Rod Guide RS**
i)	185, 289 1-192 **Rod Guides RS**
i)	187, 291 1-193 **Rod Guide RS**

2-102

◂ all product details on DIRAK.com

Swinghandle RS 105 for PHZ, RC II

[2-104]

RC2 | R L | IP 65 | RoHS WEEE

Advantages

- Swinghandle with liftable operating lever.
- 90° Closing rotation.
- For profile-cylinders with length of 40 and 45 mm.
- Protected against unauthorized access by a bolt.
- Tested according to security class RCII (DIN EN 1630).
- IP65 according to DIN EN 60529 by foamed sealing with dust cover.
- RH / LH application.
- To use the same door both RH and LH, 2 holes □46, symmetrical to door center are possible.

Materials

- **Swinghandle, dish:** zinc die, grey
- **Bolt:** zinc die, untreated
- **Cap:** zinc die, zinc plated
- **Dust cover:** PA, grey
- **Adapter:** PA, black

Remarks

(S) Door-thickness max. 3mm

1. adapter included in scope of delivery

Drawings for rod calculation (see accessories):

1. stroke 18mm

2. clearance

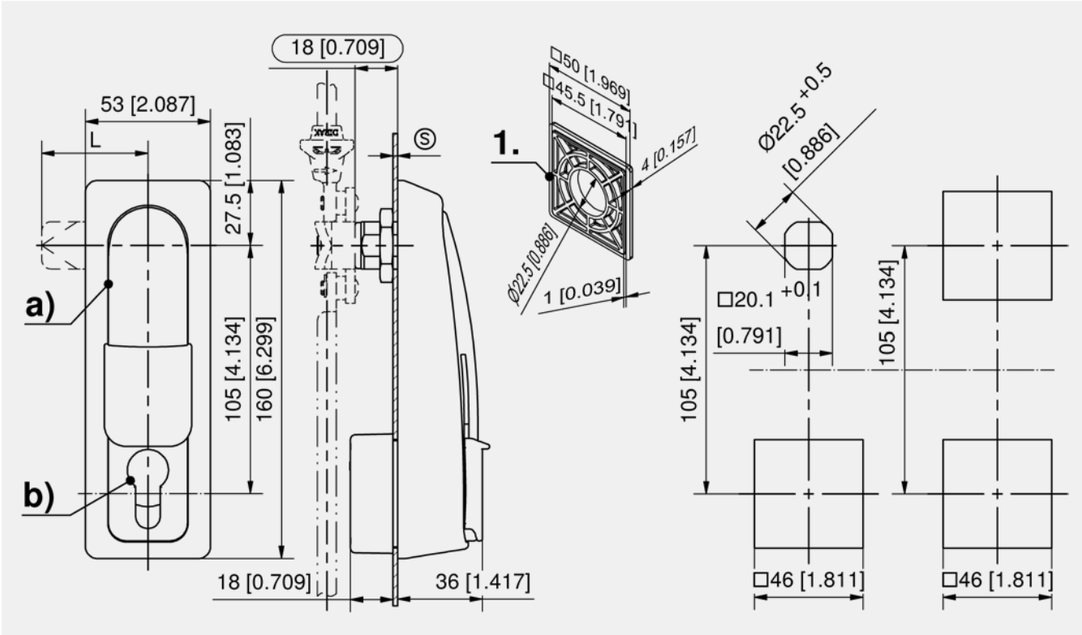

Swinghandle

	Part Number	Internal cover	Cylinder cover material	Installation type	Delivery Unit
a)	207-9136.00-07038	□46	PA	screw-on	1 pc.

	Accessories
b)	304, 388 211-9003.00-00000 **DIRAK Profile-cylinder**
b)	304, 388 211-9004.00-00000 **DIRAK Profile-cylinder**
f)	294 2-150 **3-Point Cam L45, Rod Control**
f)	175, 295 207-9595.00-00000 **Adapter for 3-point cam**
f)	175, 295 207-9596.00-00000 **Adapter for 3-point cam**
g)	181, 285 1-181 **Adapter for Round Rods Ø8mm PA**
g)	181, 285 1-181.01 **Adapter for Round Rods Ø8mm / Ø10mm Zinc Die**
h)	179, 283 1-170 **Round Rods with Eye**
h)	180, 284 1-180 **Round Rods for Adapter**

	Accessories
i)	186, 290 1-190 **Rod Guides RS**
i)	184, 288 1-191 **Height-adjustable Rod Guide RS**
i)	185, 289 1-192 **Rod Guides RS**
i)	187, 291 1-193 **Rod Guide RS**

all product details ▸ on DIRAK.com

2-104

Dual-Key Cylinder Swinghandle RS 105, RC II [2-126.01]

RC2

DIN 61373

R L

IP 65

RoHS WEEE

Advantages

- Dual-key cylinder swinghandle with pivotable operating lever.
- Complies with security test to DIN EN 1630 RCII.
- Can be opened with either of the two key cylinders. Accepts 40mm and 45mm profile cylinders.
- The handle can be locked without using a key.
- Seismic-proof according to GR-63-CORE, Issue 4.
- Vibration-proof according to DIN EN 61373.
- IP65 according to DIN EN 60529.
- Including steel insert (saw protection).
- Logo (1.) on handle on request.

Materials

- **Swinghandle and dish:** zinc die, ZL 0430, black
- **Other surfaces on request!**

Remarks

(S) Door-thickness 3mm - max. 6mm

Drawings for rod calculation (see accessories):

1. stroke 18mm
2. clearance

To use the same door both RH and LH, 2 holes □46, symmetrical to door center are possible.

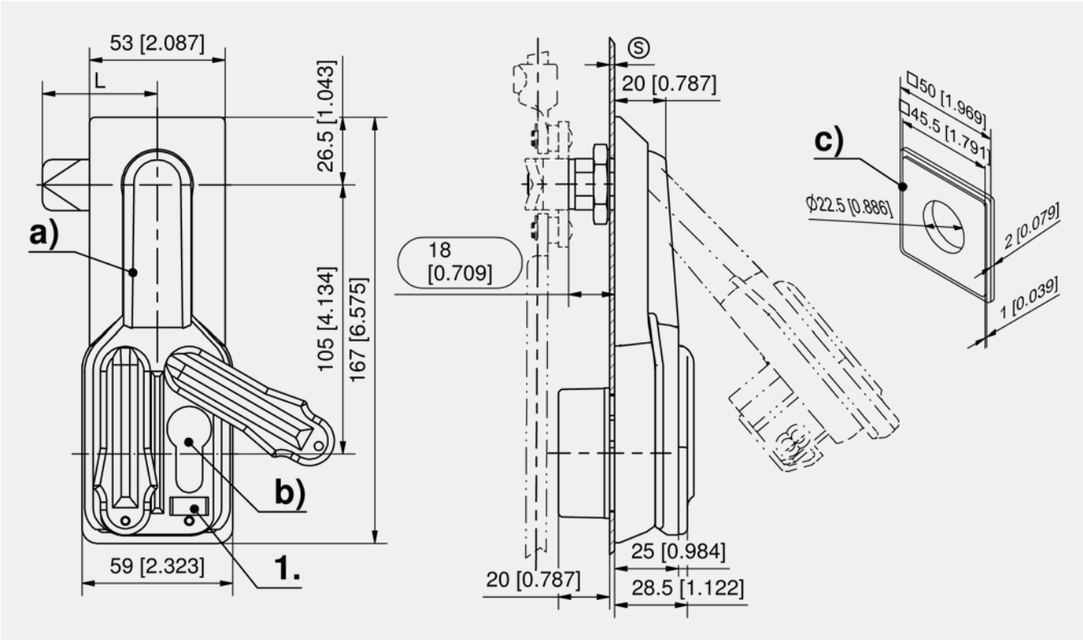

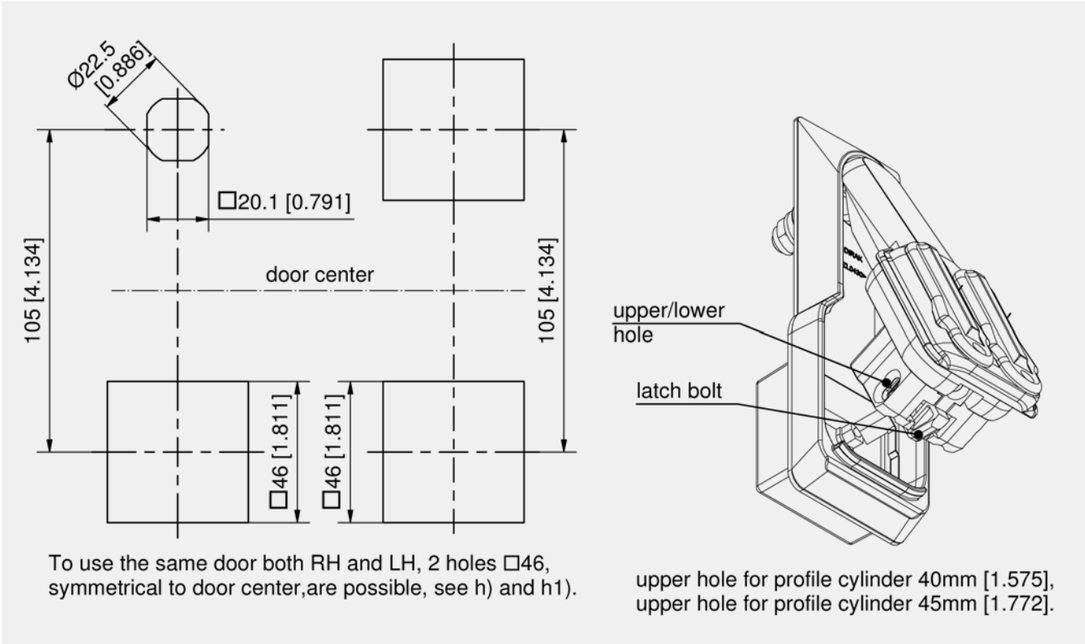

Dual-key cylinder swinghandle, RC II tested

	Part Number	Internal cover	Cylinder cover material	Securable	Installation type	Delivery Unit
a)	207-9614.00-00000	□46	zinc die	Yes	screw-on	1 pc.

	Accessories
b)	304, 388 2-140 **Profile-Cylinder DIN 18252**
c)	207-2702.03-00000 **Adapter for cutout □46mm**
c)	207-2803.00-00000 **Gasket for adapter □46mm**
f)	294 2-150 **3-Point Cam L45, Rod Control**
f)	175, 295 207-9595.00-00000 **Adapter for 3-point cam**
f)	175, 295 207-9596.00-00000 **Adapter for 3-point cam**
g)	181, 285 1-181 **Adapter for Round Rods Ø8mm PA**
g)	181, 285 1-181.01 **Adapter for Round Rods Ø8mm / Ø10mm Zinc Die**
h)	179, 283 1-170 **Round Rods with Eye**
h)	180, 284 1-180 **Round Rods for Adapter**
i)	186, 290 200-3625.51-00000 **Rod guide**
i)	186, 290 200-3623.51-00000 **Rod guide**
	769 204-0301.00-00000 **PZ building key**

2-126.01

all product details on DIRAK.com

Dual-Key Cylinder Swinghandle RS 105 PA [2-126.03]

IP 65

RoHS WEEE

Advantages

- Dual-key cylinder swinghandle with pivotable operating lever.
- Fully insulated for installation in plastic cabinets
- Can be opened with either of the two key cylinders. Accepts 40mm and 45mm profile cylinders.
- Latch bolt securely locked against unauthorized opening.
- a) latch bolt with chamfer. Closing is possible if key is removed.
- b) latch bolt with detent. Detent requires turning the key.
- IP65 according to DIN EN 60529.

Materials

- **Swinghandle and dish:** PA, black

Remarks

(S) Door-thickness min. 3mm - max. 6mm

Drawings for rod calculation (see accessories):

1. stroke 18mm
2. clearance

To use the same door both RH and LH, 2 holes □46, symmetrical to door center are possible.

Upgrading with steel insert (saw protection) possible.

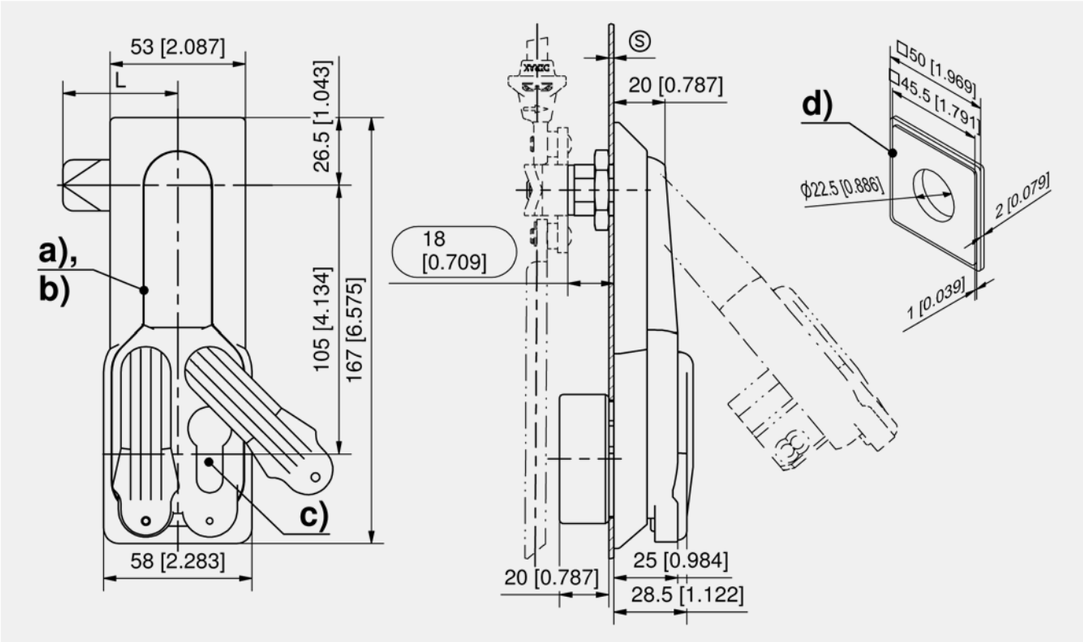

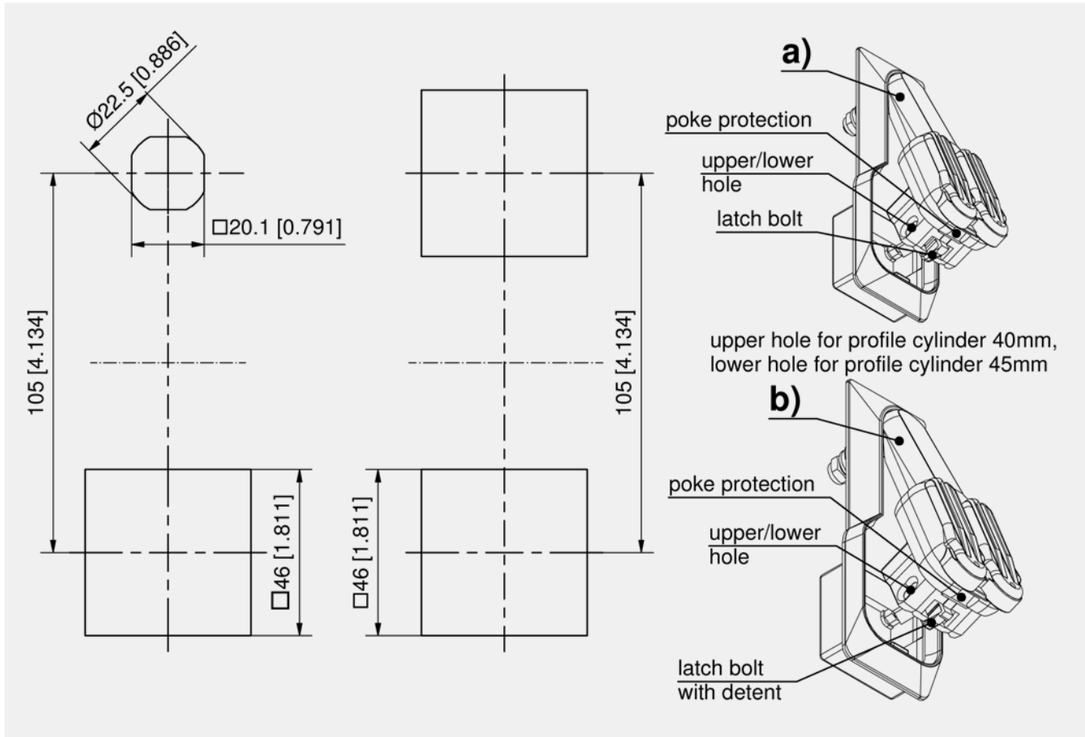

Dual-key cylinder swinghandle

	Part Number	Version	Internal cover	Reinforced dustcover	Securable	Installation type	Delivery Unit
a)	207-9617.00-00000	Latch bolt without detent	□46	Yes	Yes	screw-on	1 pc.
b)	207-9618.00-00000	Latch bolt with detent	□46	Yes	Yes	screw-on	1 pc.

	Accessories
c)	304, 388 2-140 **Profile-Cylinder DIN 18252**
d)	207-2702.03-00000 **Adapter for cutout □46mm**
d1)	207-2803.00-00000 **Gasket for adapter □46mm**
f)	294 2-150 **3-Point Cam L45, Rod Control**
f)	175, 295 207-9595.00-00000 **Adapter for 3-point cam**
f)	175, 295 207-9596.00-00000 **Adapter for 3-point cam**
g)	181, 285 1-181 **Adapter for Round Rods Ø8mm PA**

	Accessories
g)	181, 285 1-181.01 **Adapter for Round Rods Ø8mm / Ø10mm Zinc Die**
h)	179, 283 1-170 **Round Rods with Eye**
h)	180, 284 1-180 **Round Rods for Adapter**
i)	186, 290 200-3623.51-00000 **Rod guide**
	769 204-0301.00-00000 **PZ building key**

2-126.03

all product details on DIRAK.com

Swinghandle RS 130 for PHZ

[2-100.02]

IP 65

RoHS WEEE

Advantages

- Swinghandle with 90° closing rotation.
- Fully insulated.
- Cutout Ø46mm or □46mm.
- Use of Profile-cylinder according to DIN 18252.
- Use of KABA-cylinder on request.
- Use of padlocks.
- IP65 according to DIN EN 60529.
- RH / LH application.

Materials

- **Swinghandle:** zinc die, black or PA, black
- **Dish and cap:** PA, black
- **Padlock eye:** stainless steel

Remarks

(S) Door-thickness max. 3mm

Drawings for rod calculation (see accessories):

1. stroke 18mm
2. clearance

Please note: when using the adapter Ø46mm 207-2701.03-00000 or □46mm 207-2702.03-00000 the swinghandle is **no** longer water and dust tight according to IP65 standards

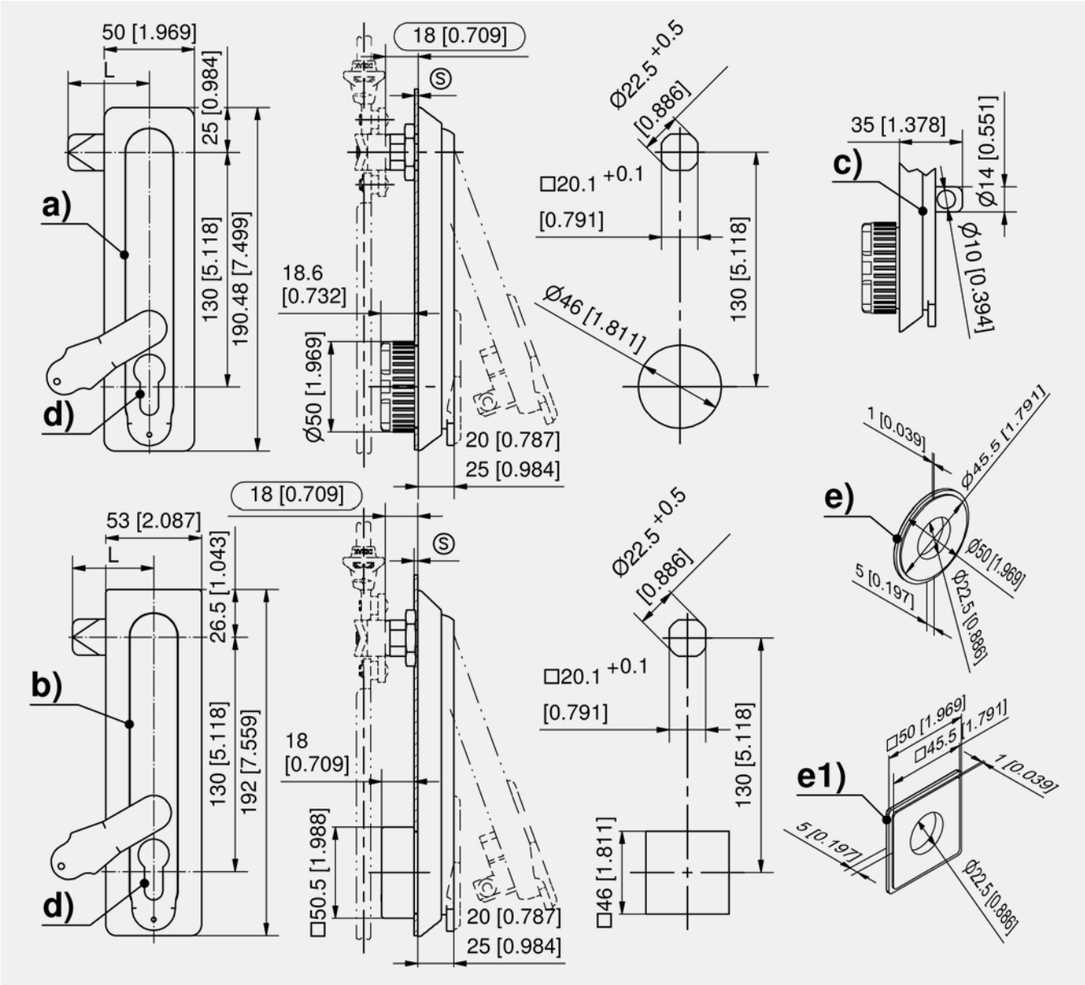

Swinghandle for PHZ, Ø46

	Part Number	Latching type	Handle material	Cylinder cover material	Securable	Installation type	Delivery Unit
a)	207-9001.00-00000	PHZ 40mm	PA			screw-on	1 pc.
a)	207-9002.00-00000	PHZ 40mm	PA	PA	Yes	screw-on	1 pc.
a)	207-9003.00-00000	PHZ 45mm	PA	PA	Yes	screw-on	1 pc.
a)	207-9004.00-00000	PHZ 45mm	zinc die	PA	Yes	screw-on	1 pc.
a)	207-9008.00-00000	PHZ 40mm	zinc die			screw-on	1 pc.
a)	207-9009.00-00000	PHZ 40mm	zinc die	PA	Yes	screw-on	1 pc.

Swinghandle for PHZ, □46

	Part Number	Latching type	Handle material	Cylinder cover material	Securable	Installation type	Delivery Unit
b)	207-9311.00-00000	PHZ 40mm	PA			screw-on	1 pc.
b)	207-9312.00-00000	PHZ 40mm	PA	PA	Yes	screw-on	1 pc.
b)	207-9313.00-00000	PHZ 45mm	PA	PA	Yes	screw-on	1 pc.
b)	207-9314.00-00000	PHZ 45mm	zinc die	PA	Yes	screw-on	1 pc.

Swinghandle for PHZ, Ø46 and padlock

	Part Number	Latching type	Handle material	Padlock bolt	Installation type	Delivery Unit
c)	207-9006.00-00000	PHZ 40mm	PA	Yes	screw-on	1 pc.

	Accessories
d)	304, 388 2-140 **Profile-Cylinder DIN 18252**
e)	207-2701.03-00000 **Adapter for cutout Ø46mm**
e)	207-2804.00-00000 **Gasket for adapter Ø46**
e1)	207-2702.03-00000 **Adapter for cutout □46mm**
f)	175, 295 207-9595.00-00000 **Adapter for 3-point cam**
f)	175, 295 207-9596.00-00000 **Adapter for 3-point cam**
f)	294 2-150 **3-Point Cam L45, Rod Control**
g)	181, 285 1-181 **Adapter for Round Rods Ø8mm PA**
g)	181, 285 1-181.01 **Adapter for Round Rods Ø8mm / Ø10mm Zinc Die**
h)	179, 283 1-170 **Round Rods with Eye**
h)	180, 284 1-180 **Round Rods for Adapter**
i)	186, 290 1-190 **Rod Guides RS**
i)	184, 288 1-191 **Height-adjustable Rod Guide RS**
i)	185, 289 1-192 **Rod Guides RS**
i)	187, 291 1-193 **Rod Guide RS**

2-100.02

all product details on DIRAK.com

Swinghandle RS 130 for Rod Latch PrA

[2-110]

A

R L

IP 65

RoHS WEEE

Advantages

- Swinghandle for cutout 130.
- For sheet metal and plastic enclosures.
- 135° rotation.
- The polyamide handle is fully insulated.
- The swinghandle can be locked with profile-cylinders with 45° or 90° cylinder cam feature.
- IP65 according to DIN EN 60529.
- RH / LH application.
- By using the lock support d), the assembly of the rod latch PrA is possible.

Materials

- **Handle:** zinc die, black or PA, black
- **Dish and cap:** PA, black
- **Lock support:** zinc die, untreated

Remarks

(S) Door-thickness max. 3mm

For doors to be symmetrical for RH and LH operations, two cut-outs □46mm with lock support e) are required.

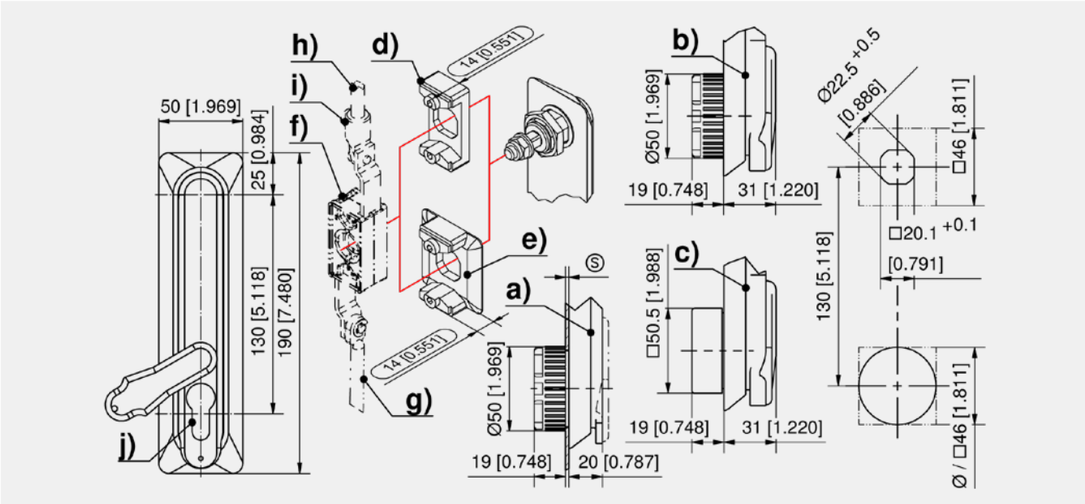

Swinghandle for profile cylinder

	Part Number	Latching type	Handle material	Cylinder cover material	Securable	Reinforced dustcover	Internal cover	Installation type	Delivery Unit
a)	207-9023.00-00000	PHZ 40mm	PA				Ø46	screw-on	1 pc.
a)	207-9024.00-00000	PHZ 40mm	PA	PA	Yes		Ø46	screw-on	1 pc.
b)	207-9030.00-00000	PHZ 45mm	PA	PA	Yes		Ø46	screw-on	1 pc.
b)	207-9034.00-00000	PHZ 45mm	zinc die	PA	Yes		Ø46	screw-on	1 pc.
c)	207-9346.00-00000	PHZ 45mm	zinc die	PA	Yes	Yes	□46	screw-on	1 pc.

Lock support

	Part Number	Version	Delivery Unit
d)	207-3501.00-00000	for cutout Ø22.5	1 pc.
e)	207-2706.00-00000	for cutout □46	1 pc.

	Accessories
f)	352 3-100 **Rod Latch RS/FS PrA**
g)	179, 283 201-9021.00-Lxxmm **Round rod, variable length, with eye parallel to the roller**
g)	179, 283 1-170 **Round Rods with Eye**
h)	180, 284 1-180 **Round Rods for Adapter**
i)	181, 285 1-181 **Adapter for Round Rods Ø8mm PA**

	Accessories
i)	181, 285 1-181.01 **Adapter for Round Rods Ø8mm / Ø10mm Zinc Die**
j)	304, 388 2-140 **Profile-Cylinder DIN 18252**
	186, 290 1-190 **Rod Guides RS**
	187, 291 1-193 **Rod Guide RS**

2-110

all product details on DIRAK.com

Swinghandle RS PrC with Key Cylinder

See page 234

Dual-Key Cylinder Swinghandle RS 130, RC II [2-126.02]

RC2

R L

IP 65

RoHS WEEE

Advantages

- Dual-key cylinder swinghandle with pivotable operating lever.
- Can be opened with either of the two key cylinders. Accepts 40mm and 45mm profile cylinders.
- The handle can be locked without using a key.
- Complies with security test to DIN EN 1630 RCII.
- IP65 according to DIN EN 60529.
- Including steel insert (saw protection).
- Logo (1.) on handle on request.

Materials

- **Swinghandle and dish:** zinc die, ZL 0430, black
- **Other surfaces on request!**

Remarks

(S) Door-thickness 3mm - max. 6mm

Drawings for rod calculation (see accessories):

1. stroke 18mm
2. clearance

To use the same door both RH and LH, 2 holes □46, symmetrical to door center are possible.

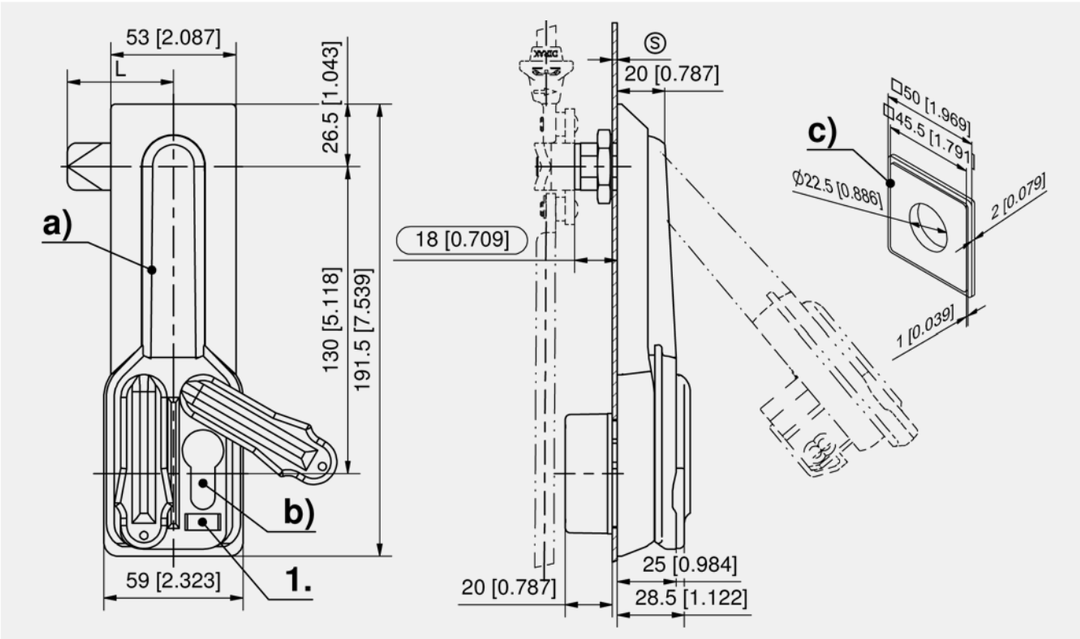

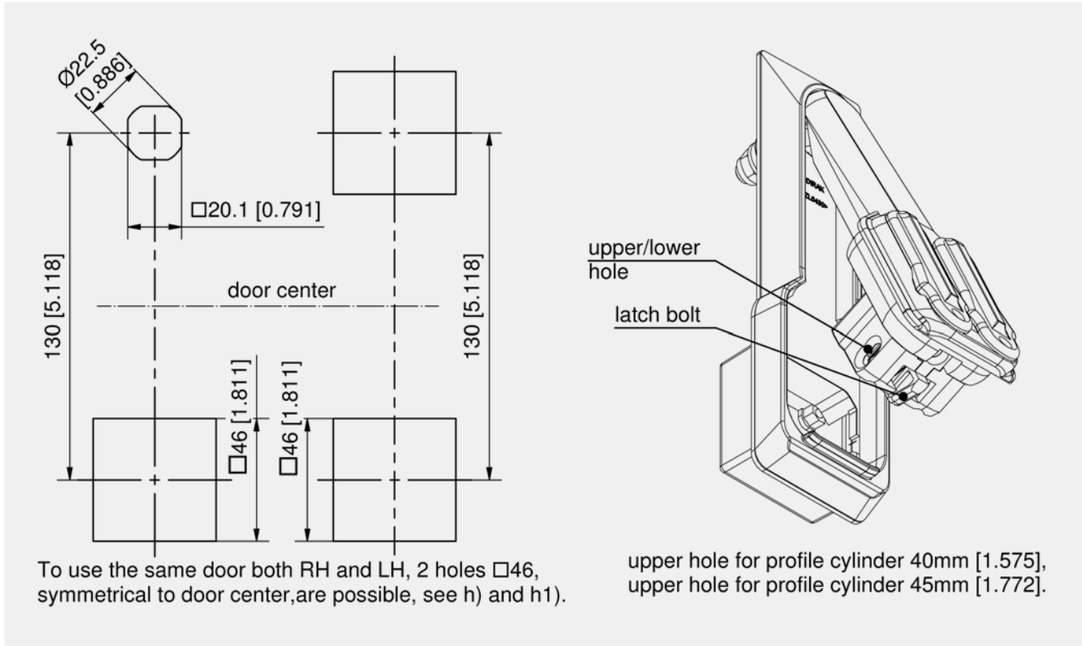

Dual-key cylinder swinghandle, RC II tested

	Part Number	Internal cover	Cylinder cover material	Securable	Installation type	Delivery Unit
a)	207-9414.00-00000	□46	zinc die	Yes	screw-on	1 pc.

	Accessories
b)	304, 388 2-140 **Profile-Cylinder DIN 18252**
c)	207-2702.03-00000 **Adapter for cutout □46mm**
f)	294 2-150 **3-Point Cam L45, Rod Control**
f)	175, 295 207-9595.00-00000 **Adapter for 3-point cam**
f)	175, 295 207-9596.00-00000 **Adapter for 3-point cam**
g)	181, 285 1-181 **Adapter for Round Rods Ø8mm PA**

	Accessories
g)	181, 285 1-181.01 **Adapter for Round Rods Ø8mm / Ø10mm Zinc Die**
h)	179, 283 1-170 **Round Rods with Eye**
h)	180, 284 1-180 **Round Rods for Adapter**
i)	186, 290 200-3623.51-00000 **Rod guide**
i)	186, 290 200-3625.51-00000 **Rod guide**
	769 204-0301.00-00000 **PZ building key**

2-126.02

all product details on DIRAK.com

Dual-Key Cylinder Swinghandle RS 130 PA [2-126.04]

IP 65

RoHS WEEE

Advantages

- Dual-key cylinder swinghandle with pivotable operating lever.
- Fully insulated for installation in plastic cabinets
- Can be opened with either of the two key cylinders. Accepts 40mm and 45mm profile cylinders.
- Latch bolt securely locked against unauthorized opening.
- a) latch bolt with chamfer. Closing is possible if key is removed.
- b) latch bolt with detent. Detent requires turning the key.
- IP65 according to DIN EN 60529.

Materials

- **Swinghandle and dish:** PA, black

Remarks

(S) Door-thickness 3mm - max. 6mm

Drawings for rod calculation (see accessories):

1. stroke 18mm
2. clearance

To use the same door both RH and LH, 2 holes □46, symmetrical to door center are possible.

Upgrading with steel insert (saw protection) possible.

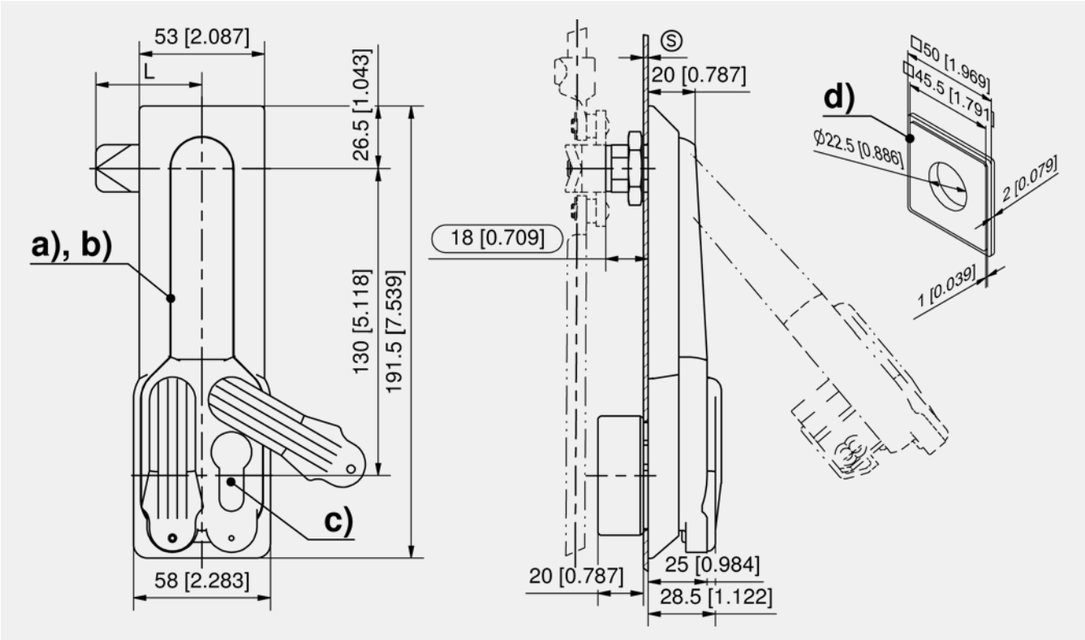

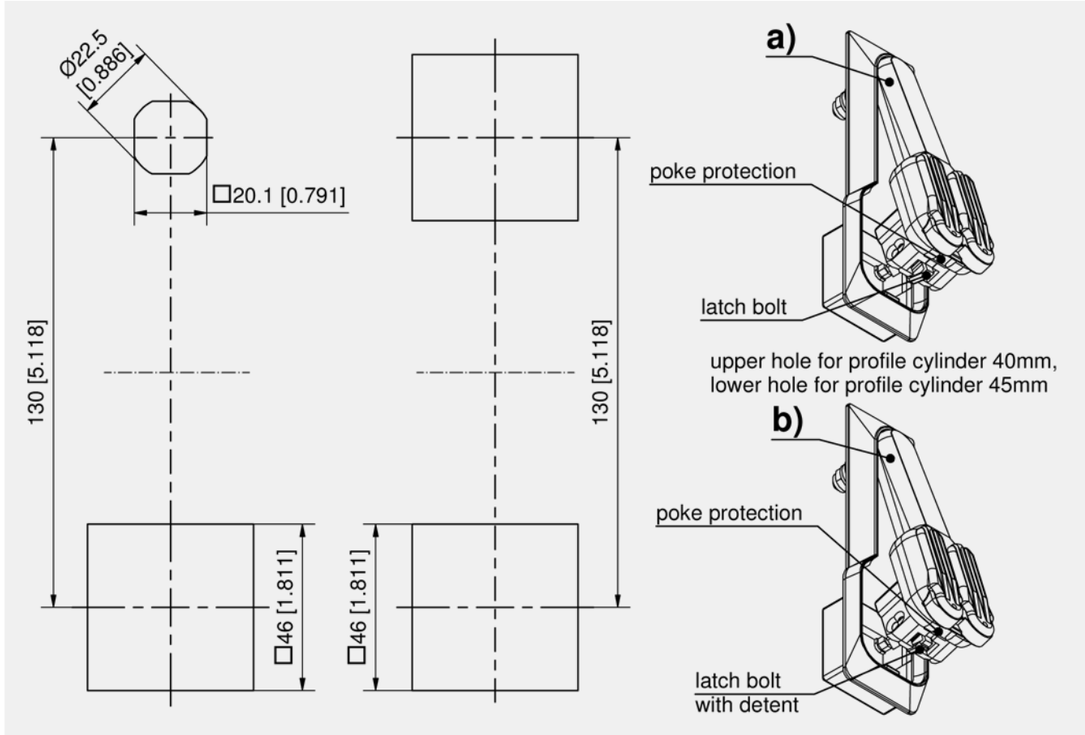

Dual-key cylinder swinghandle

	Part Number	Version	Internal cover	Reinforced dustcover	Securable	Installation type	Delivery Unit
a)	207-9417.00-00000	Latch bolt without detent	□46	Yes	Yes	screw-on	1 pc.
b)	207-9418.00-00000	Latch bolt with detent	□46	Yes	Yes	screw-on	1 pc.

Accessories

c)	304, 388	2-140 **Profile-Cylinder DIN 18252**
d)	207-2702.03-00000	**Adapter for cutout □46mm**
d1)	207-2803.00-00000	**Gasket for adapter □46mm**
f)	294	2-150 **3-Point Cam L45, Rod Control**
f)	175, 295	207-9595.00-00000 **Adapter for 3-point cam**
f)	175, 295	207-9596.00-00000 **Adapter for 3-point cam**
g)	181, 285	1-181 **Adapter for Round Rods Ø8mm PA**

Accessories

g)	181, 285	1-181.01 **Adapter for Round Rods Ø8mm / Ø10mm Zinc Die**
h)	179, 283	1-170 **Round Rods with Eye**
h)	180, 284	1-180 **Round Rods for Adapter**
i)	186, 290	200-3623.51-00000 **Rod guide**
	769	204-0301.00-00000 **PZ building key**

2-126.04

all product details on DIRAK.com

Swinghandle RS 130 for Rod Latch

[2-300]

IP 65

RoHS WEEE

Advantages

- Swinghandle for series 235 (130mm).
- IP65 according to DIN EN 60529.
- RH / LH application.

Materials

- **Swinghandle:** PA, black or zinc die, black
- **Dish and cap:** PA, black

Remarks

(S) Door-thickness max. 3mm

Swinghandles in "short" version (105mm) can only be used with rod latches see product system 1-400, stroke 13mm!

Part No. for these "short" versions: on request

Part No. for grey RAL 7032 versions: on request

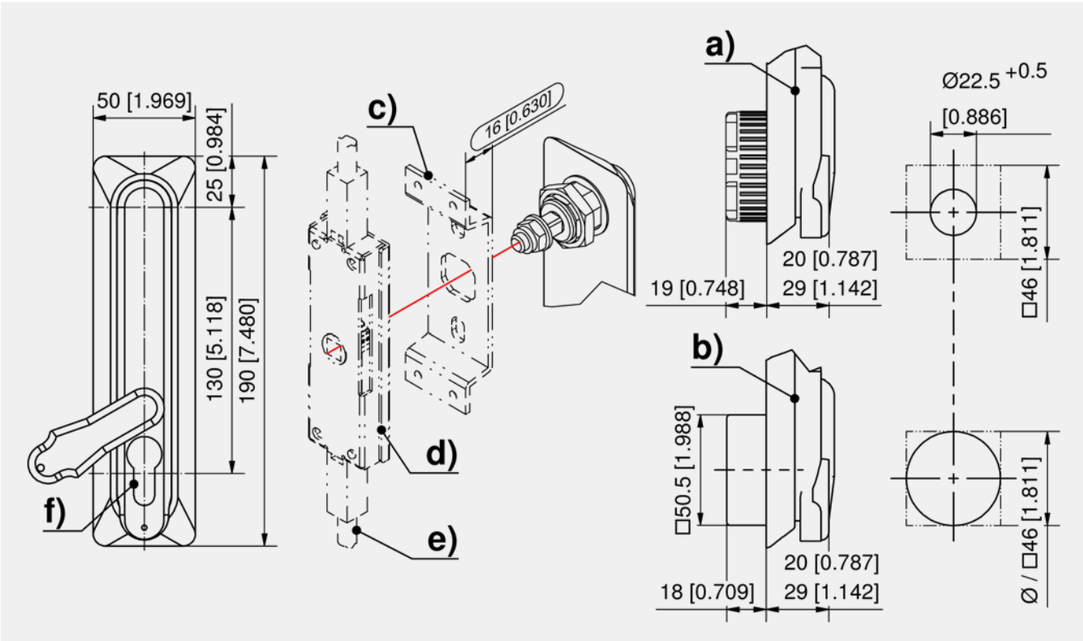

2-300

all product details on DIRAK.com

Swinghandle PA, black, for profile-cylinder, Ø46

	Part Number	Latching type	Cylinder cover material	Reinforced dustcover	Securable	Installation type	Delivery Unit
a)	207-9035.00-00000	PHZ 40mm				screw-on	1 pc.
a)	207-9036.00-00000	PHZ 40mm	PA		Yes	screw-on	1 pc.
a)	207-9037.00-00000	PHZ 40mm	PA	Yes	Yes	screw-on	1 pc.
a)	207-9061.00-00000	PHZ 40mm	zinc die		Yes	screw-on	1 pc.
a)	207-9041.00-00000	PHZ 45mm				screw-on	1 pc.
a)	207-9042.00-00000	PHZ 45mm	PA		Yes	screw-on	1 pc.
a)	207-9043.00-00000	PHZ 45mm	PA	Yes	Yes	screw-on	1 pc.
a)	207-9063.00-00000	PHZ 45mm	zinc die		Yes	screw-on	1 pc.

Swinghandle, handle zinc die, dish PA black, for profile-cylinder, Ø46

	Part Number	Latching type	Cylinder cover material	Reinforced dustcover	Securable	Installation type	Delivery Unit
a)	207-9038.00-00000	PHZ 40mm				screw-on	1 pc.
a)	207-9039.00-00000	PHZ 40mm	PA		Yes	screw-on	1 pc.
a)	207-9040.00-00000	PHZ 40mm	PA	Yes	Yes	screw-on	1 pc.
a)	207-9062.00-00000	PHZ 40mm	zinc die		Yes	screw-on	1 pc.
a)	207-9044.00-00000	PHZ 45mm				screw-on	1 pc.
a)	207-9045.00-00000	PHZ 45mm	PA		Yes	screw-on	1 pc.
a)	207-9046.00-00000	PHZ 45mm	PA	Yes	Yes	screw-on	1 pc.
a)	207-9064.00-00000	PHZ 45mm	zinc die		Yes	screw-on	1 pc.

Swinghandle PA, black, for profile-cylinder, □46

	Part Number	Latching type	Cylinder cover material	Reinforced dustcover	Securable	Installation type	Delivery Unit
b)	207-9323.00-00000	PHZ 40mm				screw-on	1 pc.
b)	207-9327.00-00000	PHZ 40mm	PA		Yes	screw-on	1 pc.
b)	207-9331.00-00000	PHZ 40mm	PA	Yes	Yes	screw-on	1 pc.
b)	207-9335.00-00000	PHZ 40mm	zinc die		Yes	screw-on	1 pc.
b)	207-9325.00-00000	PHZ 45mm				screw-on	1 pc.
b)	207-9329.00-00000	PHZ 45mm	PA		Yes	screw-on	1 pc.
b)	207-9333.00-00000	PHZ 45mm	PA	Yes	Yes	screw-on	1 pc.
b)	207-9337.00-00000	PHZ 45mm	zinc die		Yes	screw-on	1 pc.

Swinghandle, handle zinc die, dish PA black, for profile-cylinder, □46

	Part Number	Latching type	Cylinder cover material	Reinforced dustcover	Securable	Installation type	Delivery Unit
b)	207-9324.00-00000	PHZ 40mm				screw-on	1 pc.
b)	207-9328.00-00000	PHZ 40mm	PA		Yes	screw-on	1 pc.
b)	207-9332.00-00000	PHZ 40mm	PA	Yes	Yes	screw-on	1 pc.
b)	207-9336.00-00000	PHZ 40mm	zinc die		Yes	screw-on	1 pc.
b)	207-9326.00-00000	PHZ 45mm				screw-on	1 pc.
b)	207-9330.00-00000	PHZ 45mm	PA		Yes	screw-on	1 pc.
b)	207-9334.00-00000	PHZ 45mm	PA	Yes	Yes	screw-on	1 pc.
b)	207-9338.00-00000	PHZ 45mm	zinc die		Yes	screw-on	1 pc.

	Accessories
c)	205, 206 235-1002.00-00000 **Lock support A26**
d)	207 1-410 **2-Point Rod Latch RS**
e)	179, 283 1-170 **Round Rods with Eye**
f)	304, 388 2-140 **Profile-Cylinder DIN 18252**
	186, 290 1-190 **Rod Guides RS**
	187, 291 1-193 **Rod Guide RS**

Swinghandle RS 130 for Rod Latch

[2-340]

IP 65

RoHS WEEE

Advantages

- Swinghandle can only be used with rod latches see product system 2-340.01
- For round rods with thread.
- PA version fully insulated.
- IP65 according to DIN EN 60529.
- RH / LH application.

Materials

- **Swinghandle:** PA, black or zinc die, black
- **Dish and cap:** PA, black

Remarks

(S) Door-thickness max. 3mm

Dual cylinder RS130 see product system 2-126.02 (zinc die) and 2-126.04 (PA) on request.

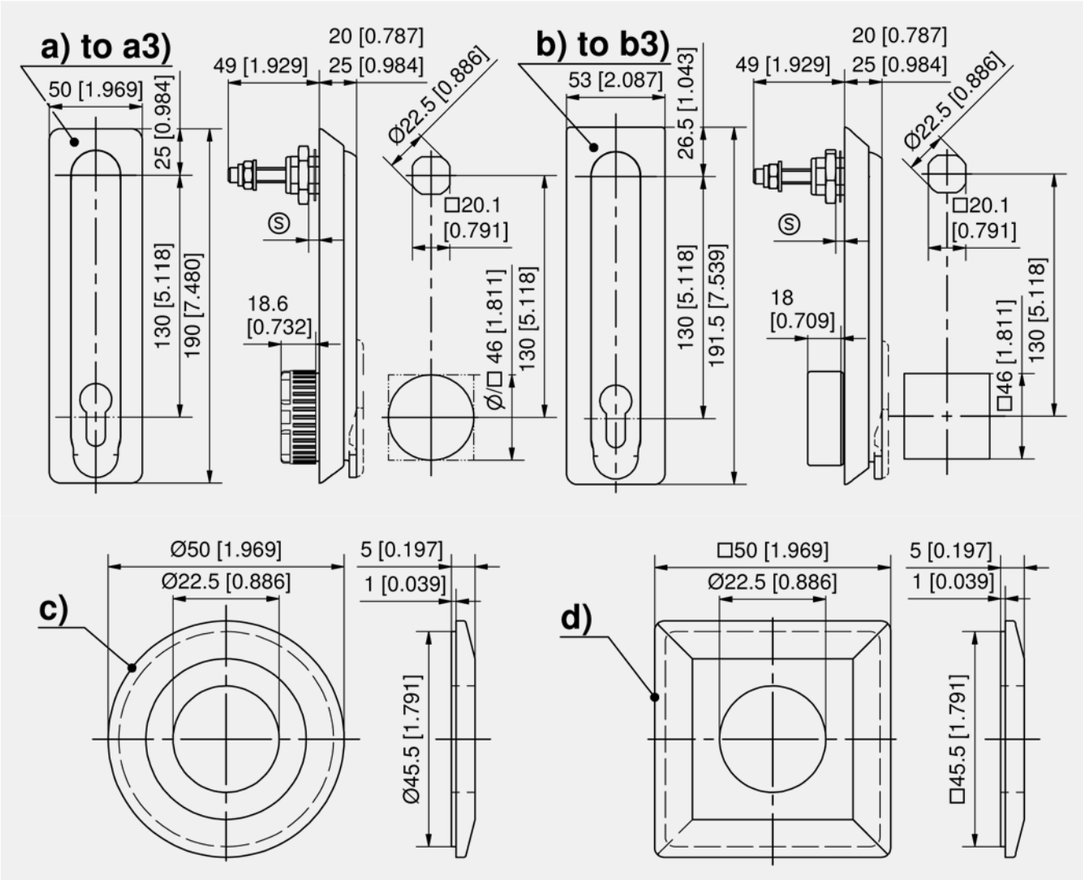

2-340

◂ all product details on DIRAK.com

Swinghandle PA, black, for profile-cylinder, Ø46

	Part Number	Latching type	Cylinder cover material	Securable	Installation type	Delivery Unit
a)	207-9056.00-00000	PHZ 40mm			screw-on	1 pc.
a1)	207-9057.00-00000	PHZ 40mm	PA	Yes	screw-on	1 pc.
a2)	207-9058.00-00000	PHZ 45mm	PA	Yes	screw-on	1 pc.

Swinghandle, handle zinc die, dish PA black, for profile-cylinder, Ø46

	Part Number	Latching type	Cylinder cover material	Securable	Installation type	Delivery Unit
a3)	207-9059.00-00000	PHZ 45mm	zinc die	Yes	screw-on	1 pc.

Swinghandle PA, black, for profile-cylinder, □46

	Part Number	Latching type	Cylinder cover material	Securable	Installation type	Delivery Unit
b)	207-9319.00-00000	PHZ 40mm			screw-on	1 pc.
b1)	207-9320.00-00000	PHZ 40mm	PA	Yes	screw-on	1 pc.
b2)	207-9321.00-00000	PHZ 45mm	PA	Yes	screw-on	1 pc.

Swinghandle, handle zinc die, dish PA black, for profile-cylinder, □46

	Part Number	Latching type	Cylinder cover material	Securable	Installation type	Delivery Unit
b2)	207-9322.00-00000	PHZ 45mm	zinc die	Yes	screw-on	1 pc.

+	Accessories
c)	207-2701.03-00000 **Adapter for cutout Ø46mm**
d)	207-2702.03-00000 **Adapter for cutout □46mm**
304, 388	2-140 **Profile-Cylinder DIN 18252**
307	2-340.01 **Rod Latch RS**

Swinghandle for Rod Latch 2-400.01

[2-400]

IP 65

RoHS WEEE

Advantages

- Swinghandles and dual cylinder swinghandles for rod latches with internal release.
- Door-thicknesses from 20 to 106mm.
- With 90° closing rotation.
- IP65 according to DIN EN 60529.
- RH / LH application.

Materials

a) and b)

- **Swinghandle:** PA, black or zinc die, black
- **Dish:** PA, black

c)

- **Swinghandle, dish and cap:** zinc die, black

Remarks

(S) Door-thickness max. 3mm

rod latch see 2-400.01

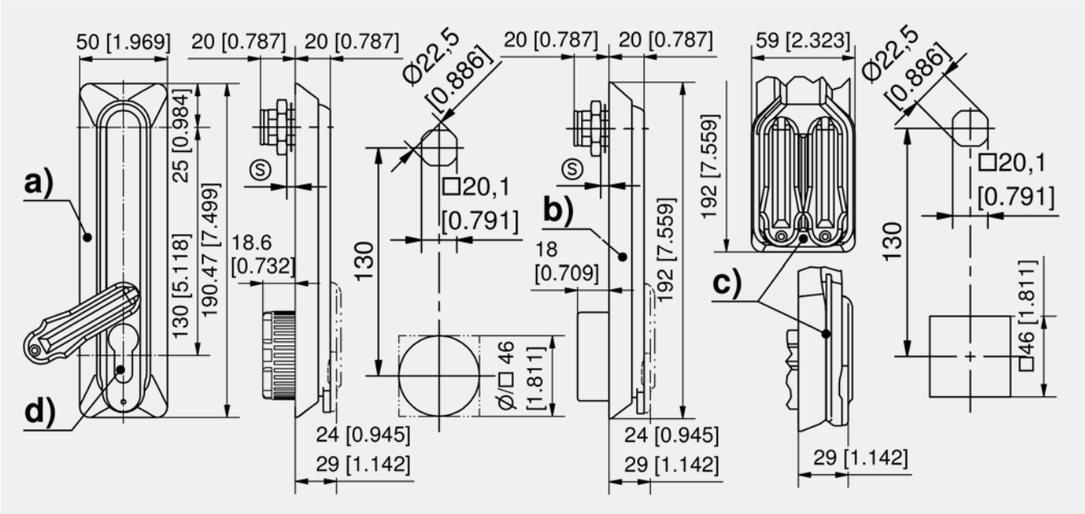

Swinghandle for rod latch

	Part Number	Latching type	Cutout	Handle material	Cylinder cover	Installation type	Delivery Unit
a)	207-9052.00-00000	PHZ 40mm	130/Ø46	PA		screw-on	1 pc.
a)	207-9053.00-00000	PHZ 40mm	130/Ø46	PA	Yes	screw-on	1 pc.
a)	207-9054.00-00000	PHZ 45mm	130/Ø46	PA	Yes	screw-on	1 pc.
a)	207-9055.00-00000	PHZ 45mm	130/Ø46	zinc die	Yes	screw-on	1 pc.
b)	207-9315.00-00000	PHZ 40mm	130/□46	PA		screw-on	1 pc.
b)	207-9316.00-00000	PHZ 40mm	130/□46	PA	Yes	screw-on	1 pc.
b)	207-9317.00-00000	PHZ 45mm	130/□46	PA	Yes	screw-on	1 pc.
b)	207-9318.00-00000	PHZ 45mm	130/□46	zinc die	Yes	screw-on	1 pc.

Dual cylinder swinghandle for rod latch

	Part Number	Latching type	Cutout	Handle material	Cylinder cover	Installation type	Delivery Unit
c)	207-9416.00-00000	PHZ 40/45mm	130/□46	zinc die	Yes	screw-on	1 pc.

	Accessories
d)	304, 388 2-140 **Profile-Cylinder DIN 18252**

	Specific accessories
	308 2-400.01 **Rod Latch for Internal Release**

2-400

all product details on DIRAK.com

Swinghandle base with LED Module

See page 247

Eject and Turn T-Handle FS/RS

[3-145]

RC2

R L

90°

IP 65

RoHS WEEE

Advantages

- T-handle with 90° swing-out and 135° rotatable T-handle element.
- For flat or round rods.
- Safety tested according to RCII DIN 1630.
- Very tight tolerances.
- The flat design prevents the handle from being used as a climbing aid.
- The locking cylinder can not be forced inwards by axial forces.
- The T-handle can not be folded down if not in line with the housing.
- Separate locking device sub-unit. Suitable for: Euro cylinder, KABA cylinder and padlock.
- Application inside or outside the sealed area.
- IP65 according to DIN EN 60529.
- RH / LH application.
- Condensation water drain.

Materials

- **Dish, T-handle:** zinc die, black
- **Flat rod and rod stub:** steel, zinc plated
- **Padlock bolt:** AISI 303
- **O-ring:** NBR, black

Remarks

(S) Door-thickness 1.5 - 2.5mm

1. stroke 24mm

2. position of the spacer if used outside the sealed area

3. position of the spacer if used inside the sealed area

4. closed and locked

5. open cover

6. turn key: T-handle ejects

7. T-handle can be operated

Version with insert on request.

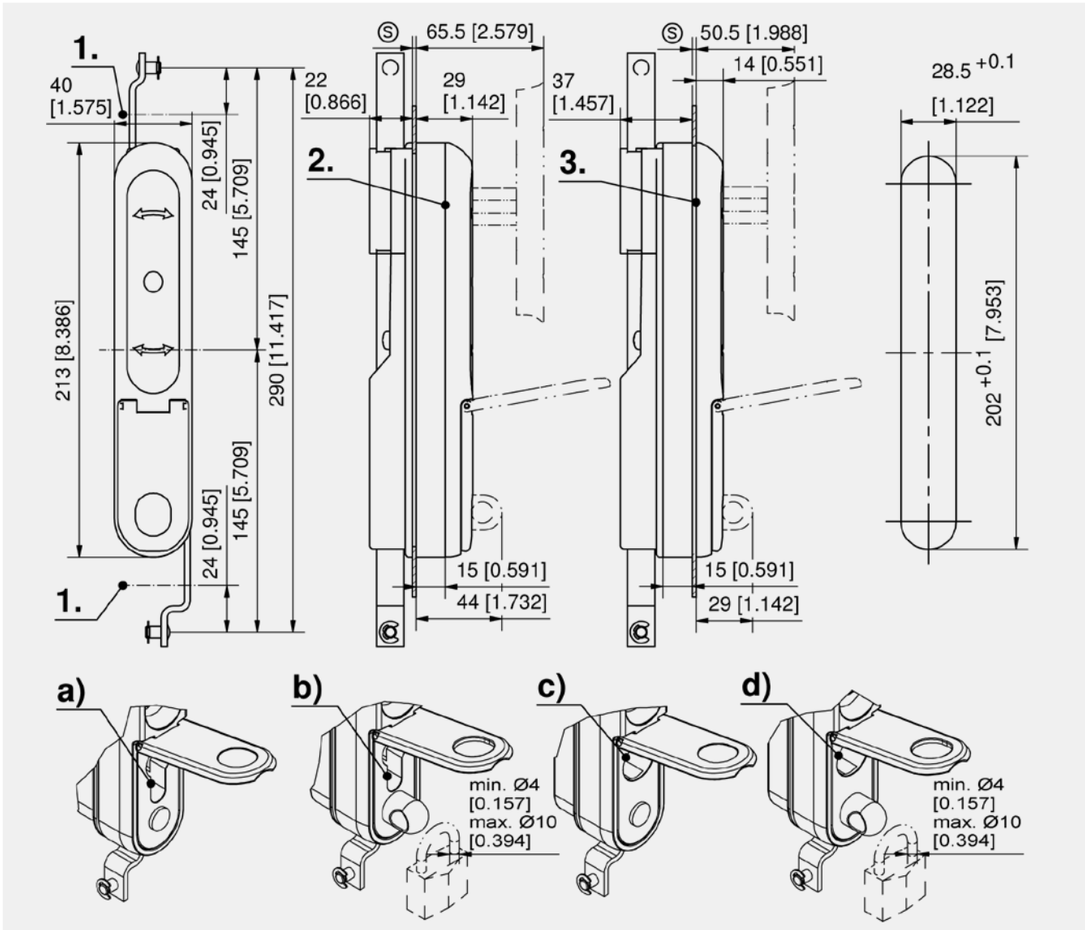

3-145

all product details on DIRAK.com

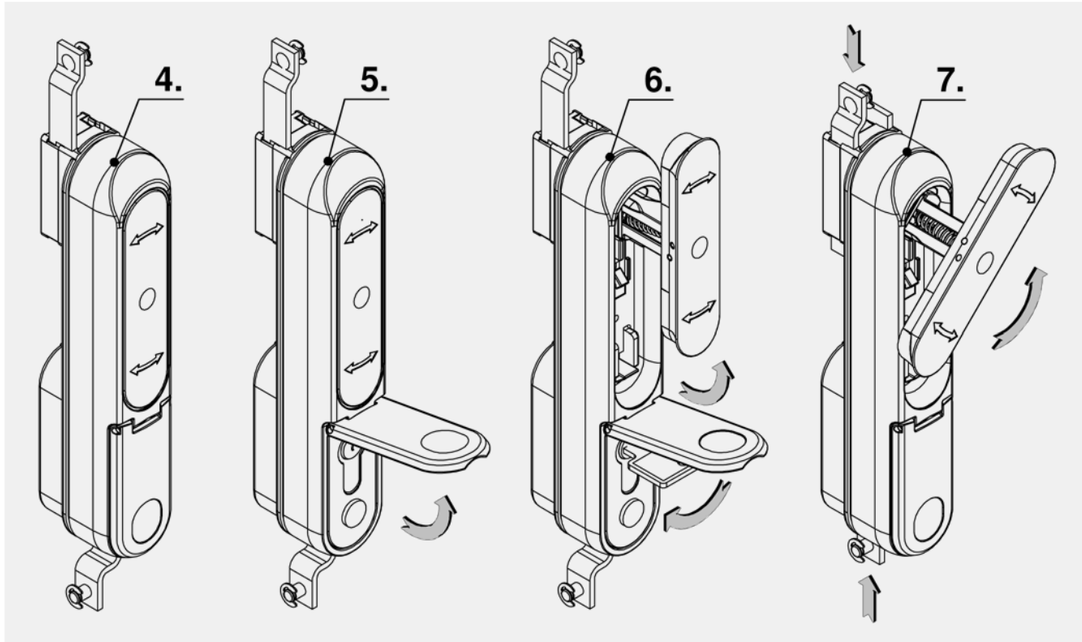

T-handle with cylinder cover

	Part Number	Latching type	Padlock	Installation type	Delivery Unit
a)	302-9001.00-60000	PHZ 40mm		screw-on	1 pc.
b)	302-9001.00-30000	PHZ 40mm	Yes	screw-on	1 pc.
c)	302-9001.00-50000	KABA		screw-on	1 pc.
d)	302-9001.00-20000	KABA	Yes	screw-on	1 pc.

+	Accessories
304, 388	211-9003.00-00000 **DIRAK Profile-cylinder**
304, 388	211-9004.00-00000 **DIRAK Profile-cylinder**

Cutout 110

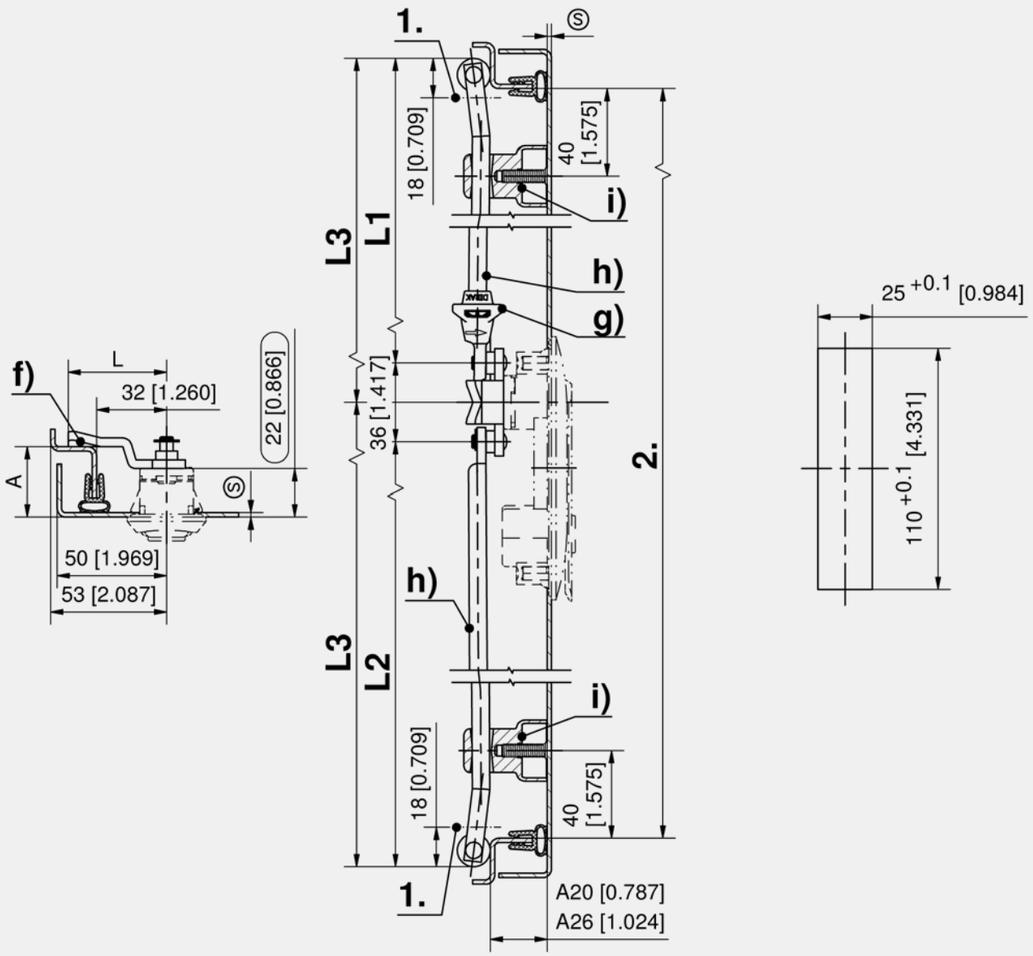

Formula for rods with eye and rollers:
cutout in the door center (rod length varies)

upper rod

$$L1 = \frac{\mathbf{2.}\,\text{clearance-12mm[0.472]}}{2\ [0.079]} - 30\,\text{mm}\ [1.181]$$

lower rod

$$L2 = \frac{\mathbf{2.}\,\text{clearance-12mm[0.472]}}{2\ [0.079]} + 30\,\text{mm}\ [1.181]$$

cutout outside the door center (rod length equal)

$$L3 = \frac{\mathbf{2.}\,\text{clearance-12mm[0.472]}}{2[0.079]}$$

			Accessories
f)	154, 292	1-102	**Cams L35/45 steel**
f)	165	1-105	**Roller Cam height adjustable**
f)	294	2-150	**3-Point Cam**
f)	175, 295	2-151	**2-, 3- and 4-Point Cam Adapter**
f)	176, 296	2-151.04	**3-Point Cam Adapter**
g)	181, 285	1-181	**Adapter PA for Round Rods**
g)	181, 285	1-181.01	**Adapter for Round Rods**

			Accessories
h)	179, 283	1-170	**Round Rod with Eye**
h)	180, 284	1-180	**Round Rods for Adapter**
i)	186, 290	1-190	**Rod Guides for 8mm Round Rods**
i)	184, 288	1-191	**Height-adjustable Rod Guide with Knurled Nut**
i)	185, 289	1-192	**Rod Guides**
i)	187, 291	1-193	**Rod Guide RS**

Cutout B

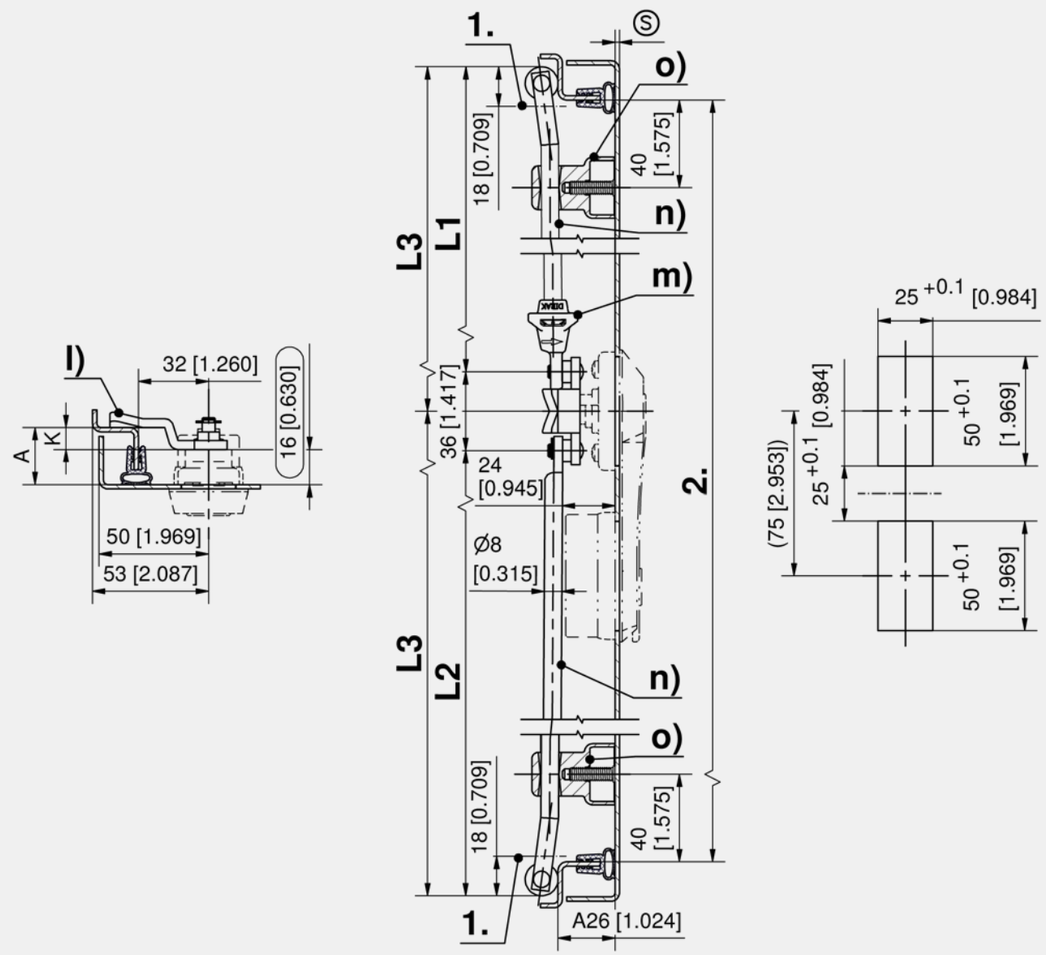

Formula for rods with eye and rollers:
cutout in the door center (rod length varies)

upper rod

$$L1 = \frac{\mathbf{2.}\,\text{clearance-12mm[0.472]}}{2\ [0.079]} - 38\,\text{mm}\ [1.496]$$

lower rod

$$L2 = \frac{\mathbf{2.}\,\text{clearance-12mm[0.472]}}{2\ [0.079]} + 38\,\text{mm}\ [1.496]$$

cutout outside the door center (rod length equal)

$$L3 = \frac{\mathbf{2.}\,\text{clearance-12mm[0.472]}}{2[0.079]}$$

			Accessories
i)	154, 292	1-102	**Cams L35/45 steel**
i)	165	1-105	**Roller Cam height adjustable**
i)	294	2-150	**3-Point Cam**
i)	175, 295	2-151	**2-, 3- and 4-Point Cam Adapter**
i)	176, 296	2-151.04	**3-Point Cam Adapter**
m)	181, 285	1-181	**Adapter PA for Round Rods**
m)	181, 285	1-181.01	**Adapter for Round Rods**

			Accessories
n)	179, 283	1-170	**Round Rod with Eye**
n)	180, 284	1-180	**Round Rods for Adapter**
o)	186, 290	1-190	**Rod Guides for 8mm Round Rods**
o)	184, 288	1-191	**Height-adjustable Rod Guide with Knurled Nut**
o)	185, 289	1-192	**Rod Guides**
o)	187, 291	1-193	**Rod Guide RS**

Cutout C

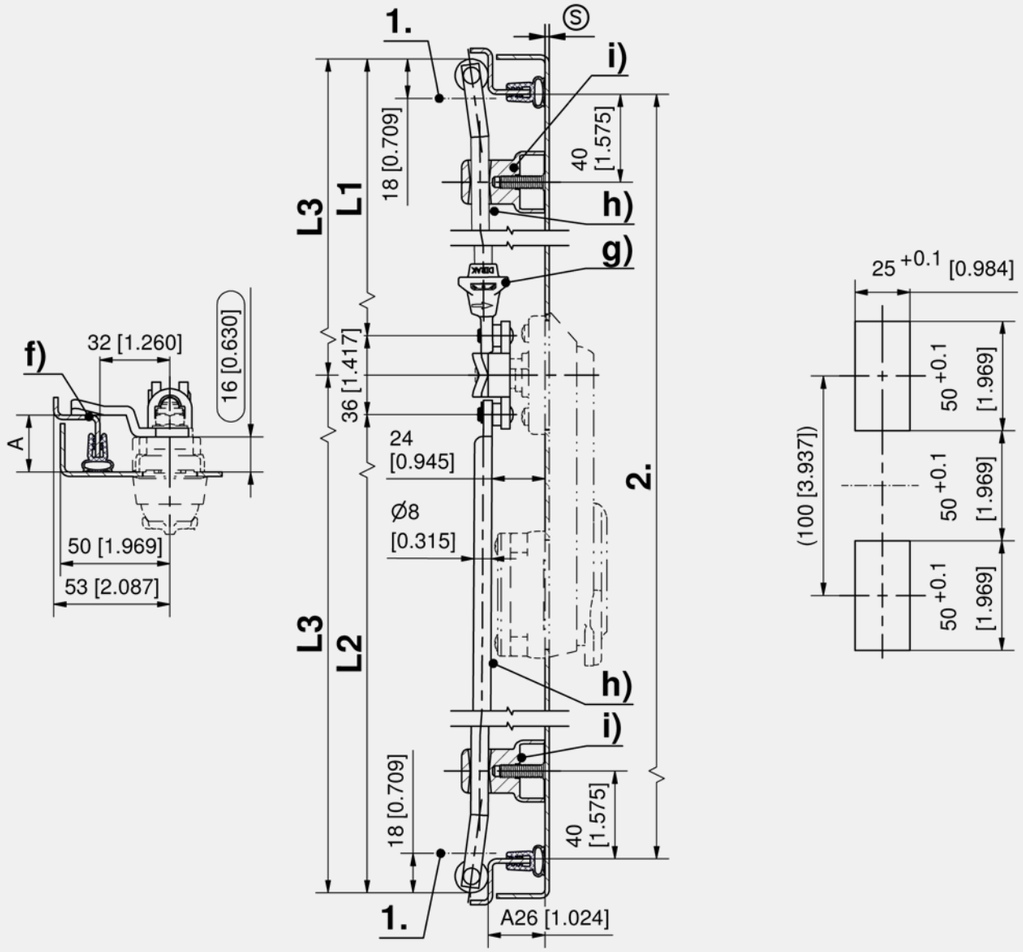

Formula for rods with eye and rollers:
cutout in the door center (rod length varies)

upper rod

$$L1=\frac{\textbf{2.}\text{clearance}-12\text{mm}[0.472]}{2\,[0.079]}-50\text{ mm }[1.969]$$

lower rod

$$L2=\frac{\textbf{2.}\text{clearance}-12\text{mm}[0.472]}{2\,[0.079]}+50\text{ mm}[1.969]$$

cutout outside the door center (rod length equal)

$$L3=\frac{\textbf{2.}\text{clearance}-12\text{mm}[0.472]}{2[0.079]}$$

			Accessories
f)	154, 292	1-102	**Cams L35/45 steel**
f)	165	1-105	**Roller Cam height adjustable**
f)	294	2-150	**3-Point Cam**
f)	175, 295	2-151	**2-, 3- and 4-Point Cam Adapter**
f)	176, 296	2-151.04	**3-Point Cam Adapter**
g)	181, 285	1-181	**Adapter PA for Round Rods**
g)	181, 285	1-181.01	**Adapter for Round Rods**

			Accessories
h)	179, 283	1-170	**Round Rod with Eye**
h)	180, 284	1-180	**Round Rods for Adapter**
i)	186, 290	1-190	**Rod Guides for 8mm Round Rods**
i)	184, 288	1-191	**Height-adjustable Rod Guide with Knurled Nut**
i)	185, 289	1-192	**Rod Guides**
i)	187, 291	1-193	**Rod Guide RS**

Cutout 90

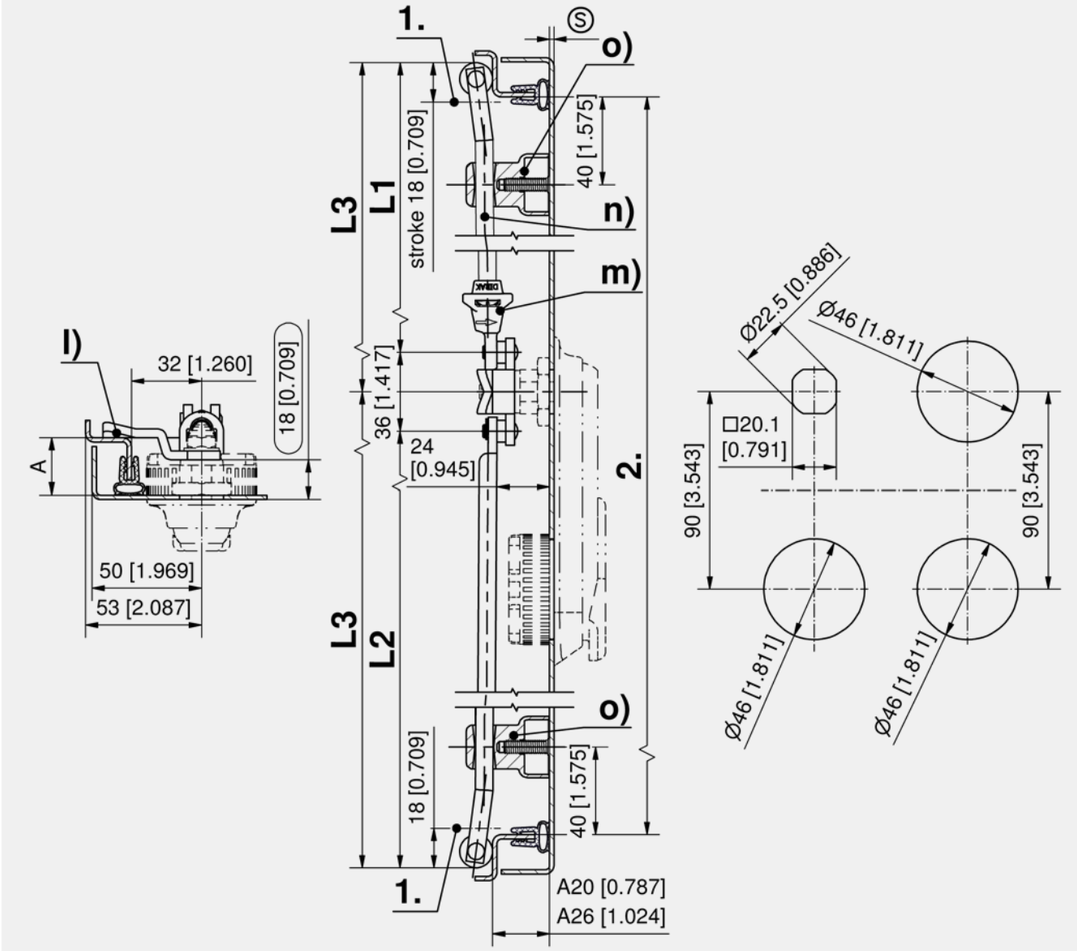

Formula for rods with eye and rollers:
cutout in the door center (rod length varies)

upper rod

$$L1=\frac{\textbf{2.}\text{clearance}-12\text{mm}[0.472]}{2\,[0.079]}-45\text{ mm }[1.772]$$

lower rod

$$L2=\frac{\textbf{2.}\text{clearance}-12\text{mm}[0.472]}{2\,[0.079]}+45\text{ mm}[1.772]$$

cutout outside the door center (rod length equal)

$$L3=\frac{\textbf{2.}\text{clearance}-12\text{mm}[0.472]}{2[0.079]}$$

			Accessories
l)	154, 292	1-102	**Cams L35/45 steel**
l)	165	1-105	**Roller Cam height adjustable**
l)	294	2-150	**3-Point Cam**
l)	175, 295	2-151	**2-, 3- and 4-Point Cam Adapter**
l)	176, 296	2-151.04	**3-Point Cam Adapter**
m)	181, 285	1-181	**Adapter PA for Round Rods**
m)	181, 285	1-181.01	**Adapter for Round Rods**

			Accessories
n)	179, 283	1-170	**Round Rod with Eye**
n)	180, 284	1-180	**Round Rods for Adapter**
o)	186, 290	1-190	**Rod Guides for 8mm Round Rods**
o)	184, 288	1-191	**Height-adjustable Rod Guide with Knurled Nut**
o)	185, 289	1-192	**Rod Guides**
o)	187, 291	1-193	**Rod Guide RS**

Cutout 105

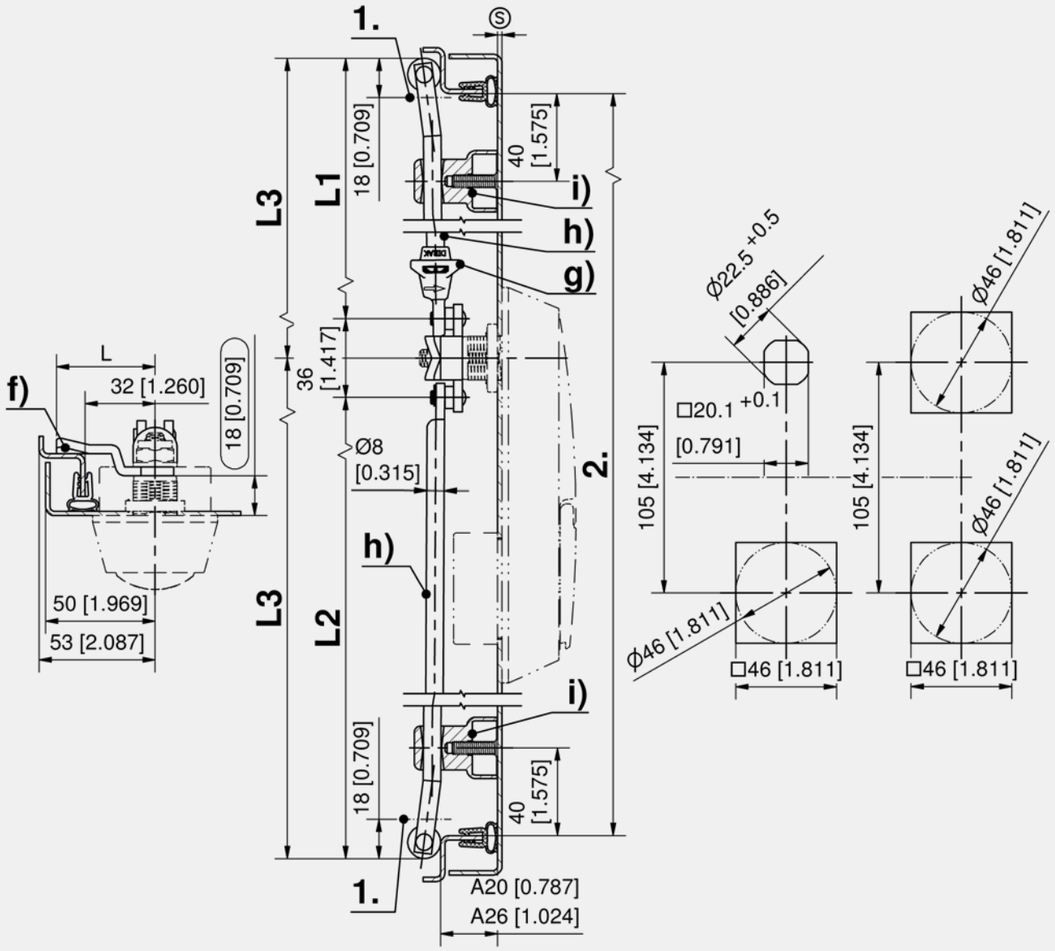

Formula for rods with eye and rollers:
cutout in the door center (rod length varies)

upper rod

$$L1 = \frac{\textbf{2.}\text{clearance-12mm[0.472]}}{2\ [0.079]} - 53\,\text{mm}\ [2.087]$$

lower rod

$$L2 = \frac{\textbf{2.}\text{clearance-12mm[0.472]}}{2\ [0.079]} + 53\,\text{mm}\ [2.087]$$

cutout outside the door center (rod length equal)

$$L3 = \frac{\textbf{2.}\text{clearance-12mm[0.472]}}{2[0.079]}$$

		Accessories
f)	154, 292	1-102 **Cams L35/45 steel**
f)	165	1-105 **Roller Cam height adjustable**
f)	294	2-150 **3-Point Cam**
f)	175, 295	2-151 **2-, 3- and 4-Point Cam Adapter**
f)	176, 296	2-151.04 **3-Point Cam Adapter**
g)	181, 285	1-181 **Adapter PA for Round Rods**
g)	181, 285	1-181.01 **Adapter for Round Rods**

		Accessories
h)	179, 283	1-170 **Round Rod with Eye**
h)	180, 284	1-180 **Round Rods for Adapter**
i)	186, 290	1-190 **Rod Guides for 8mm Round Rods**
i)	184, 288	1-191 **Height-adjustable Rod Guide with Knurled Nut**
i)	185, 289	1-192 **Rod Guides**
i)	187, 291	1-193 **Rod Guide RS**

Cutout 130

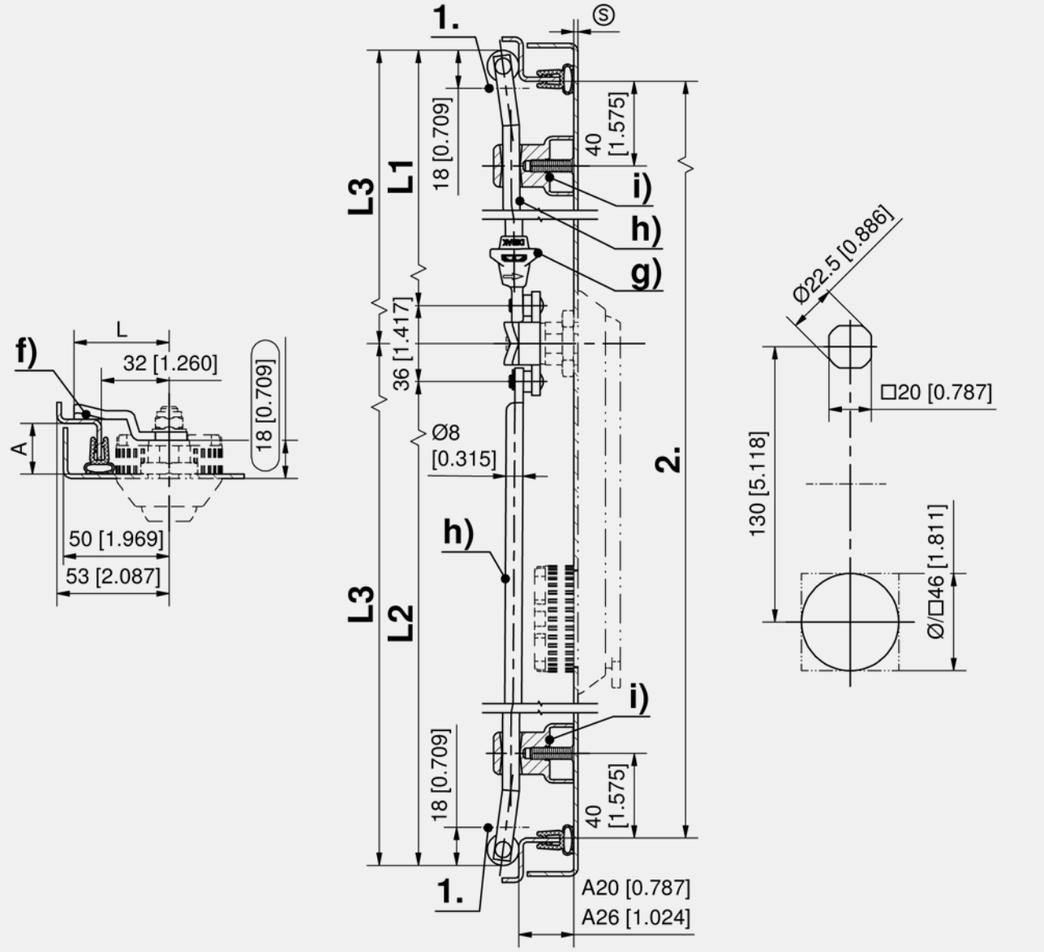

Formula for rods with eye and rollers:
cutout in the door center (rod length varies)

upper rod

$$L1 = \frac{\textbf{2.}\text{clearance-12mm[0.472]}}{2\ [0.079]} - 65\,\text{mm}\ [2.559]$$

lower rod

$$L2 = \frac{\textbf{2.}\text{clearance-12mm[0.472]}}{2\ [0.079]} + 65\,\text{mm}\ [2.559]$$

cutout outside the door center (rod length equal)

$$L3 = \frac{\textbf{2.}\text{clearance-12mm[0.472]}}{2[0.079]}$$

		Accessories
f)	154, 292	1-102 **Cams L35/45 steel**
f)	165	1-105 **Roller Cam height adjustable**
f)	294	2-150 **3-Point Cam**
f)	175, 295	2-151 **2-, 3- and 4-Point Cam Adapter**
f)	176, 296	2-151.04 **3-Point Cam Adapter**
g)	181, 285	1-181 **Adapter PA for Round Rods**
g)	181, 285	1-181.01 **Adapter for Round Rods**

		Accessories
h)	179, 283	1-170 **Round Rod with Eye**
h)	180, 284	1-180 **Round Rods for Adapter**
i)	186, 290	1-190 **Rod Guides for 8mm Round Rods**
i)	184, 288	1-191 **Height-adjustable Rod Guide with Knurled Nut**
i)	185, 289	1-192 **Rod Guides**
i)	187, 291	1-193 **Rod Guide RS**

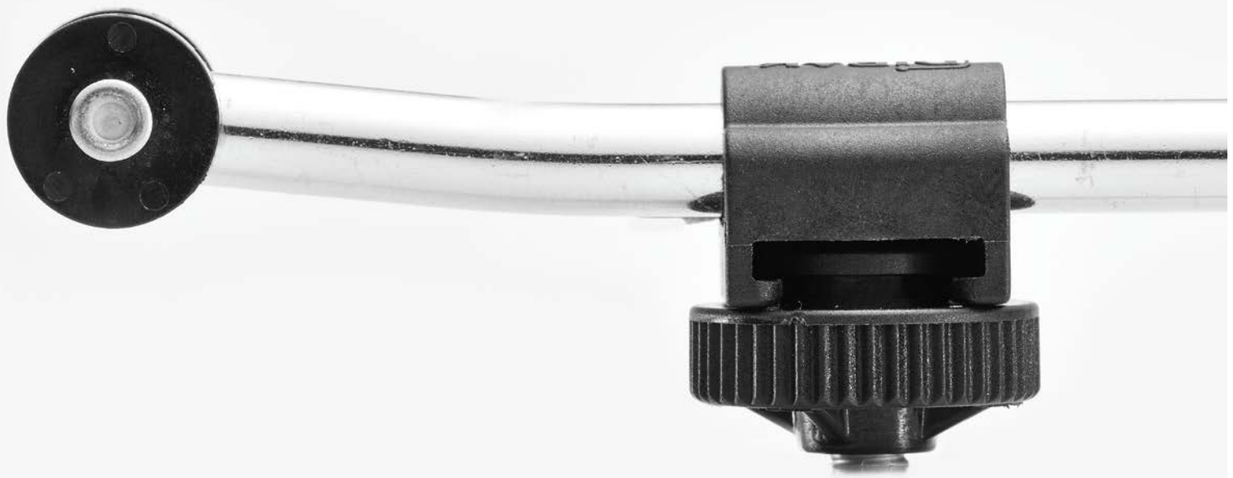

Height-adjustable Rod Guide RS

See page 288

Round Rods with Eye

[1-170]

Advantages

- Round rods in standard length and variable lengths with pressed eye.
- With a flat end.
- With chamfered end.
- Version c) for 3-point cams.
- Version d) for rod latches.
- With rollers, dimension L up to top of roller.

Materials

- **Round rods:** steel, zinc plated

Remarks

Round rods in standard length: from stock.

Bushing d) only suitable for round rod a) and b)

RoHS WEEE

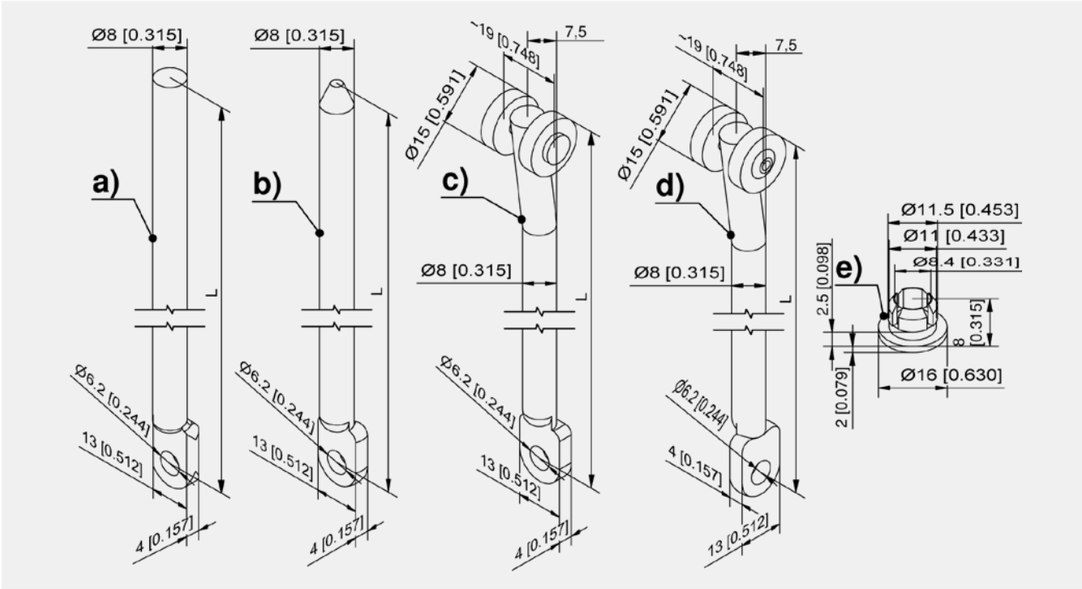

Round rods

	Part Number	Version	Length	variable length	Rod diameter Ø	Delivery Unit
a)	201-0102.00-00000	with eye	400 mm		8 mm	1 pc.
a)	201-0103.00-00000	with eye	500 mm		8 mm	1 pc.
a)	201-0104.00-00000	with eye	600 mm		8 mm	1 pc.
a)	201-0105.00-00000	with eye	700 mm		8 mm	1 pc.
a)	201-0106.00-00000	with eye	800 mm		8 mm	1 pc.
a)	201-0107.00-00000	with eye	900 mm		8 mm	1 pc.
a)	201-0108.00-00000	with eye	1000 mm		8 mm	1 pc.
a)	201-0109.00-00000	with eye	1100 mm		8 mm	1 pc.
a)	201-0110.00-00000	with eye	1200 mm		8 mm	1 pc.
a)	201-0112.00-Lxxmm	with eye		Yes	8 mm	on request
b)	201-0111.00-Lxxmm	with eye and chamfered end		Yes	8 mm	on request
c)	201-9006.00-Lxxmm	with eye and rollers		Yes	8 mm	on request
d)	201-9021.00-Lxxmm	with eye and rollers, eye parallel to the roller		Yes	8 mm	on request

Accessories

e) 203-0605.03-00000 **Bushing Ø8**

all product details ▸
on DIRAK.com

1-170

Round Rods for Adapter

[1-180]

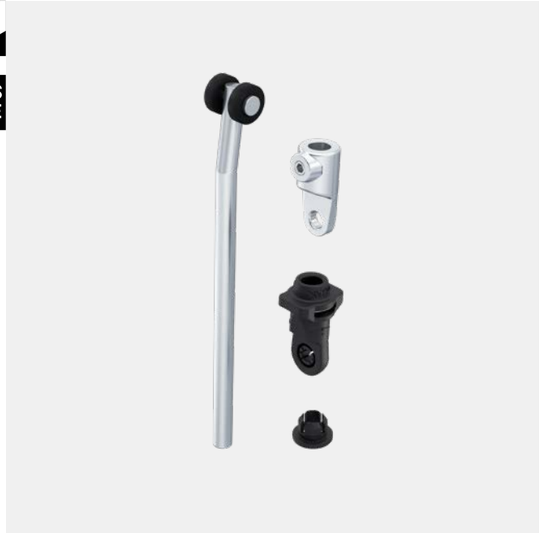

Advantages

- Round rods in standard length and variable lengths for adapter.
- With rollers, dimension L up to top of roller.

Materials

- **Round rods and rivet:** steel, zinc plated
- **Rollers:** PA, black

Remarks

Round rods in standard lengths: from stock

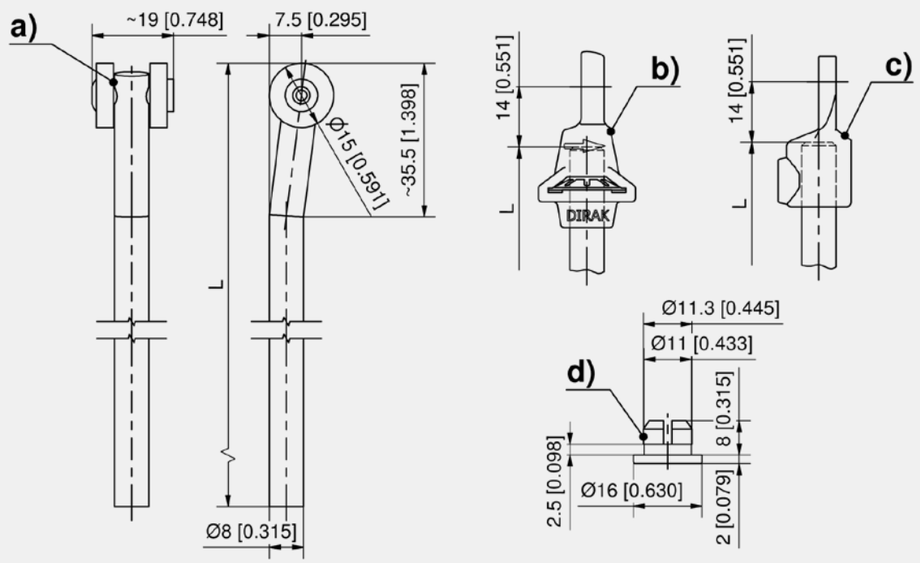

Round rods with rollers Ø 8mm

	Part Number	Length	variable length	Delivery Unit
a)	201-9001.00-00000	400 mm		1 pc.
a)	201-9020.00-00500	500 mm		1 pc.
a)	201-9002.00-00000	600 mm		1 pc.
a)	201-9020.00-00700	700 mm		1 pc.
a)	201-9003.00-00000	800 mm		1 pc.
a)	201-9020.00-00900	900 mm		1 pc.
a)	201-9004.00-00000	1000 mm		1 pc.
a)	201-9020.00-01100	1100 mm		1 pc.
a)	201-9005.00-00000	1200 mm		1 pc.
a)	201-9020.00-Lxxmm		Yes	on request

	Accessories
b)	181, 285 1-181 **Adapter for Round Rods Ø8mm PA**
c)	181, 285 1-181.01 **Adapter for Round Rods Ø8mm / Ø10mm Zinc Die**
d)	203-0605.03-00000 **Bushing Ø8**

1-180

all product details on DIRAK.com

Adapter for Round Rods Ø8mm PA

[1-181]

Advantages

- Tool-less installation.
- For 3-point cam adapter and 3-point cam.
- Rattle-free fastening.
- The rod is simply and non-detachably pressed into the adapter.
- No c-clips can be lost.
- For 90° rotation.

Materials

- **Adapter:** PA, black
- **Clamping ring:** spring steel

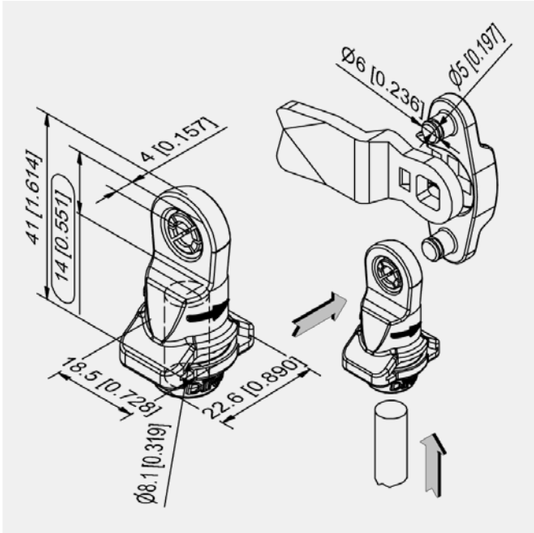

Adapter for round rods

Part Number	Rod diameter Ø	Quick-fit	Installation type	Delivery Unit
200-9621.00-00000	8 mm	Yes	tool-less	1 pc.

Adapter for Round Rods Ø8mm / Ø10mm Zinc Die

[1-181.01]

Advantages

- For 3-point cam adapter and 3-point cams.
- Fastening of the round rod by set screw.
- The adapter is fixed with a c-clip to the 3-point cam adapter or 3-point cam.
- For 90° rotation.

Materials

- **Adapter:** zinc die
- **Set screw:** steel, zinc plated

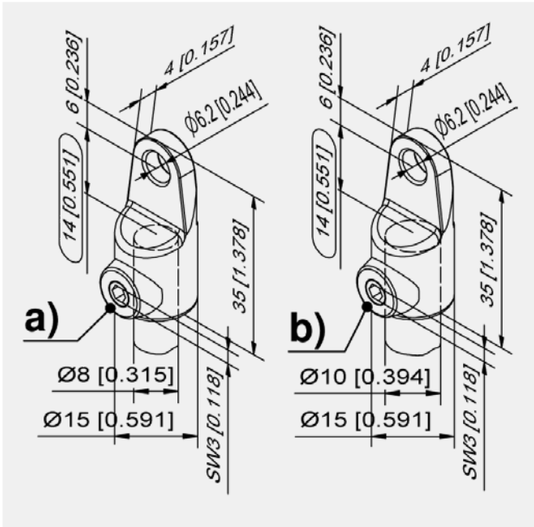

Adapter for round rods

	Part Number	Rod diameter Ø	Installation type	Delivery Unit
a)	200-9601.00-00000	8 mm	screw-on	1 pc.
b)	200-9604.00-00000	10 mm	screw-on	50 pcs.

all product details on DIRAK.com

1-181

1-181.01

Round Rods Stainless Steel [7-106]

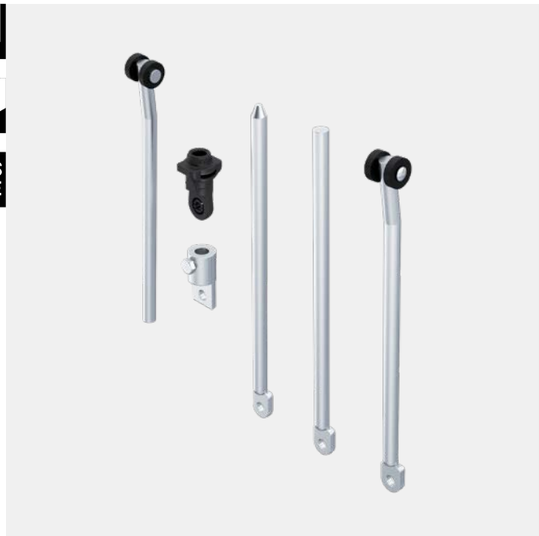

Advantages

- Round rods with standard or customized lengths, different versions.

Materials

- **Round rods and rivet:** AISI 304
- **Rollers:** PA, black

Remarks

Order example for round rods with eye and rollers, length L=840mm: 201-9026.00-00840

Bushing g) only for round rods a), b), c) and e)

Attention: dimension L measured to top of roller!

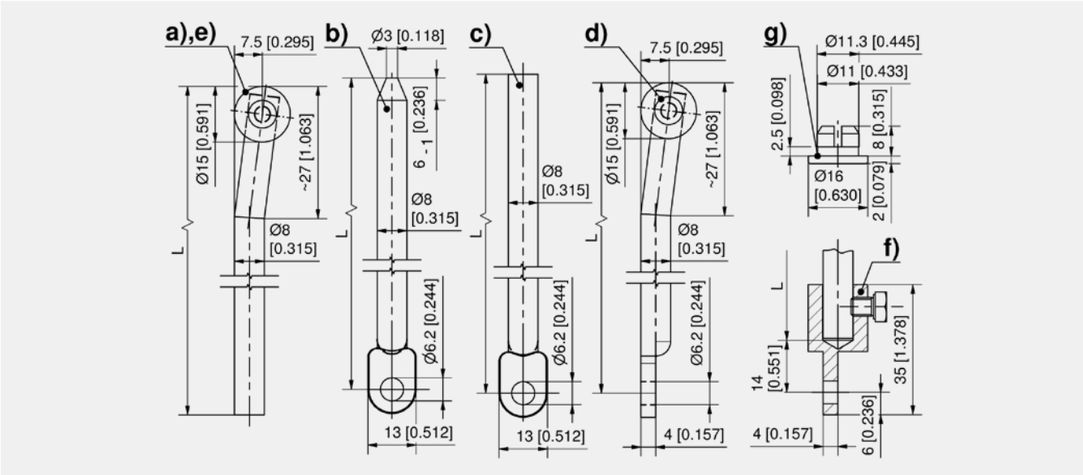

Round rods with rollers Ø 8mm for adapter

	Part Number	Length	Delivery Unit
a)	201-9010.00-00000	600 mm	1 pc.
a)	201-9011.00-00000	700 mm	1 pc.
a)	201-9012.00-00000	800 mm	1 pc.
a)	201-9013.00-00000	900 mm	1 pc.
a)	201-9014.00-00000	1000 mm	1 pc.
a)	201-9015.00-00000	1100 mm	1 pc.
a)	201-9016.00-00000	1200 mm	1 pc.

Round rods Ø 8mm, variable length

	Part Number	Version	Delivery Unit
b)	201-0111.04-Lxxmm	with eye and chamfered end	on request
c)	201-0112.04-Lxxmm	with eye and flat end	on request
d)	201-9026.00-Lxxmm	with eye and rollers	on request
e)	201-9037.00-Lxxmm	with rollers, for adapter	on request

	Accessories
f)	183, 287 200-9603.00-00000 **Adapter for Round Rods Ø8mm Stainless Steel**
g)	203-0605.03-00000 **Bushing Ø8**
	181, 285 200-9621.00-00000 **Adapter for Round Rods Ø8mm PA**

all product details on DIRAK.com
7-106

Adapter for Round Rods Ø8mm Stainless Steel [7-106.03]

Advantages

- For 3-point cam adapter and 3-point cams.
- Fastening of the round rod by set screw.
- The adapter is fixed with a c-clip to the 3-point cam adapter or 3-point cam.
- For 90° rotation.

Materials

Adapter: AISI 303

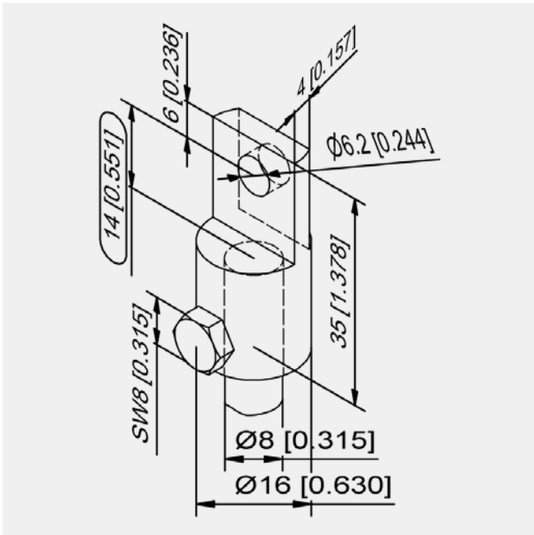

Adapter for round rods Ø8mm

Part Number	Fastening type	Delivery Unit
200-9603.00-00000	screw-on	1 pc.

Rod Guide RS, height adjustable Stainless Steel [7-912]

Advantages

- Rod guide with adjustable height for 8 mm round rods, to compensate production tolerances, or if sealing has set.
- Slotted insert (max. 12 x 2 mm).

Materials

- **Rod guide:** AISI 316
- **Adjusting screw:** AISI 303
- **C-clip and wave washer:** stainless steel

Remarks

Adjustment depending on the lenght of the weld stud:

M6 x 14 +5/-1 mm,

M6 x 16 +5/-3 mm,

M6 x 18 +5/-5 mm,

M6 x 20 +5/-7 mm

More information see product system 1-192.

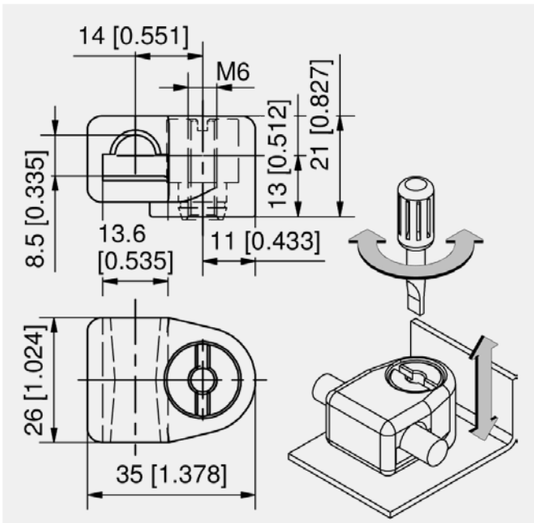

Rod guide

Part Number	Height adjustable	Adjustment range	Installation type	Delivery Unit
200-9623.00-00000	Yes	max. + 5 mm	screw-on	1 pc.

all product details on DIRAK.com
7-106.03
7-912

Height-adjustable Rod Guide RS

[1-191]

Advantages

- Rod guide is pushed onto the knurled nut and can be installed therefore pre-assembled.
- Tool-less adjustment with knurled nut.
- Readjustment possible at any time.
- Dismantling of the rod for height adjustment not necessary.
- Usable for studs M6 from 14 to 21mm.
- Adjustment range up to max. 8mm.
- RH / LH application.

Materials

- **Rod guide and knurled nut:** PA, black

Remarks

1. rod guide
2. knurled nut
3. stud
4. round rod

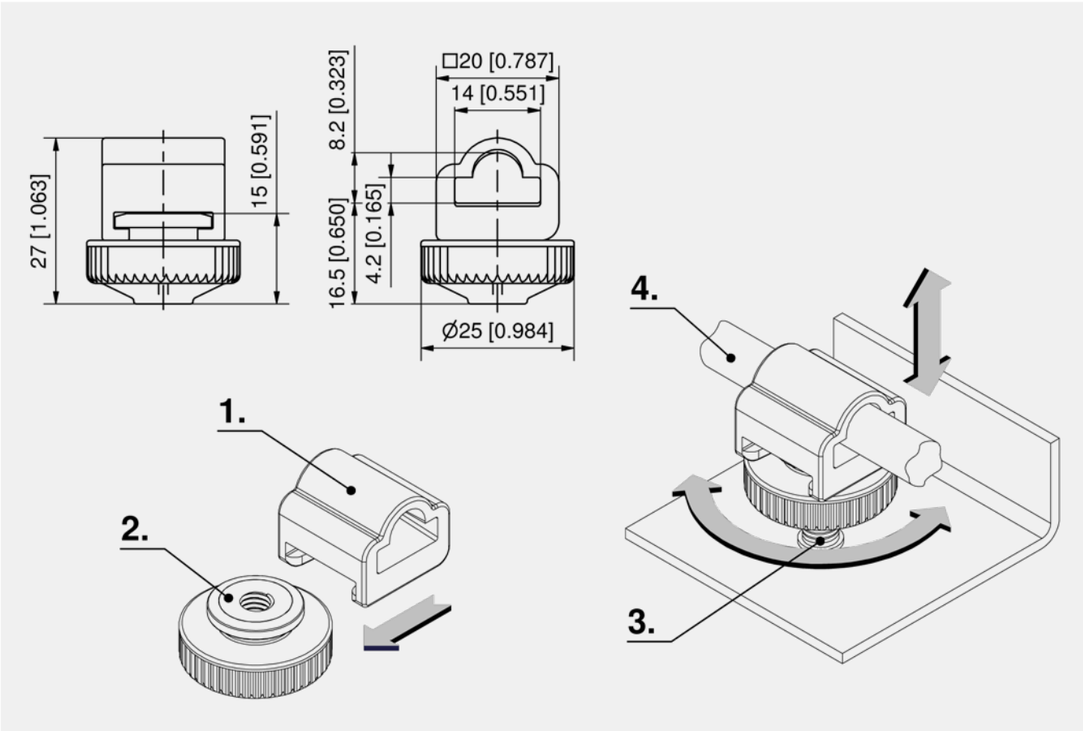

Rod guide

Part Number	Height adjustable	Adjustment range	Installation type	Delivery Unit
200-9633.00-00000	Yes	max. 8 mm	tool-less	10 pcs.

all product details on DIRAK.com
1-191

Rod Guides RS

[1-192]

Advantages

- Rod guides for 8mm round rods.
- Version a) adjustable in height to compensate production tolerances or if sealing has set.
- The rod guide can be adjusted in height by a slotted insert (max.12 x 2mm).
- With this rod guide even completely pre-assembled rod-latch systems can be installed, because the rod guide can be screwed onto the thread of the weld studs M6, by turning the threaded sleeve.
- The round shape of the hole allows free swivelling even with very short rods.

Materials

- **Rod guide:** PA, black
- **Adjusting Sleeve:** steel, zinc plated
- **Snap ring:** stainless steel

Remarks

Adjustment depending on the lenght of the weld stud:

M6 x 14 +5/-1mm,

M6 x 16 +5/-3mm,

M6 x 18 +5/-5mm,

M6 x 20 +5/-7mm

Stainless steel version see product system 7-912.

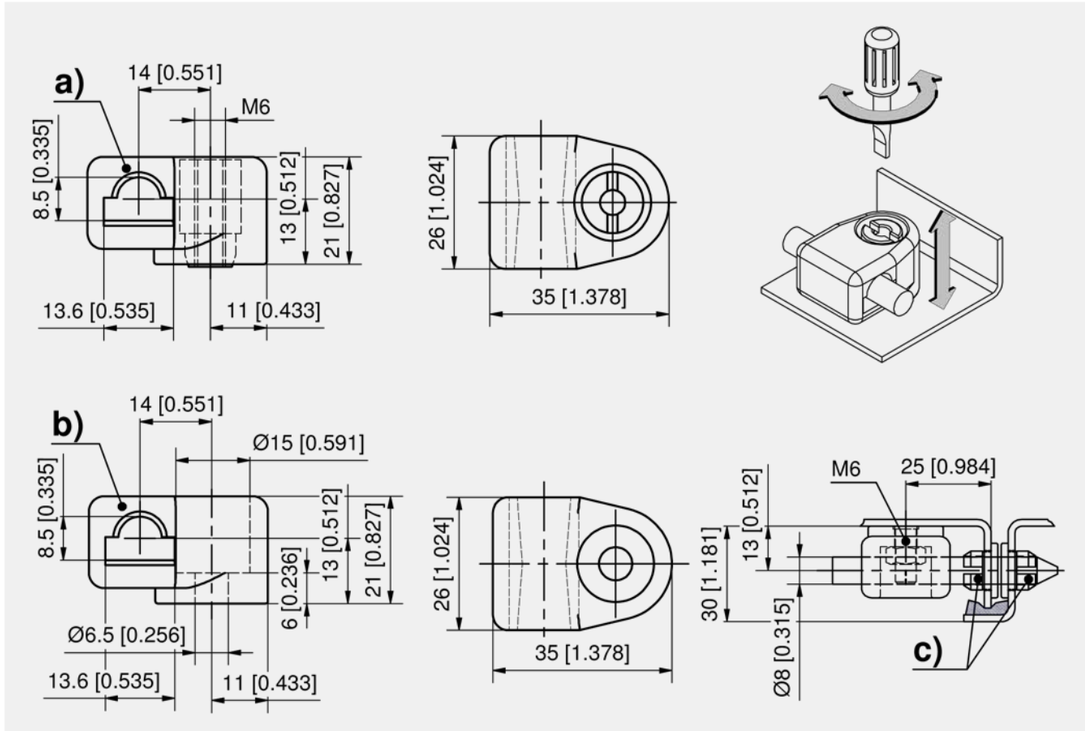

Rod guide

	Part Number	Height adjustable	Adjustment range	Installation type	Delivery Unit
a)	200-9615.00-00000	Yes	max. + 5 mm	screw-on	1 pc.
b)	200-3606.03-00000			screw-on	1 pc.

Accessories
c) 203-0605.03-00000 **Bushing Ø8**

all product details on DIRAK.com
1-192

Rod Guides RS

RoHS WEEE

Advantages

- With molded thread.
- Screwed onto a weld stud or weld-on screw.
- The round shape of the hole allows free swivelling even with very short rods.

Materials

- **Rod guide:** PA, black

Remarks

1. length of the weld studs or screws M6:

16mm for A20

20mm for A24/A26

25mm for A28

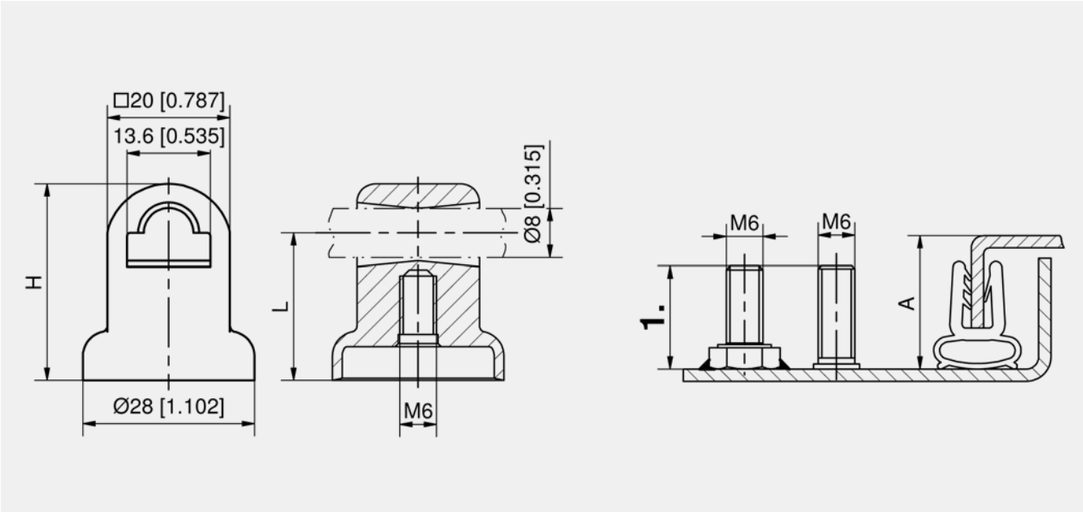

Rod guide

Part Number	Height H	A = bending	L	Installation type	Delivery Unit
200-3623.51-00000	32 mm	A20	24 mm	screw-on	1 pc.
200-3624.51-00000	36 mm	A24	28 mm	screw-on	1 pc.
200-3625.51-00000	38 mm	A26	30 mm	screw-on	1 pc.
200-3626.51-00000	40 mm	A28	32 mm	screw-on	1 pc.

1-190

◂ all product details on DIRAK.com

Rod Guide RS

RoHS WEEE

Advantages

- For 8mm round rods for installation without tools on weld-stud M6x20mm.
- The rod guide has to be placed over the weld stud and then pushed onto the thread until a "click" is audible. It is locked now in the final position.
- Visual inspection possible from above through openings.
- The rod guide can be removed from the threaded stud by inserting a flat head screwdriver, pushing the jaws apart and sliding the rod guide out.

Materials

- **Rod guide:** PA6, black

Remarks

Completely pre-assembled rod latches (including 3-point cam, round rod, rollers and rod guide) can also be mounted with this rod guide, as the rod guide is simply pushed over the weld stud.

The rod guide must be installed as shown in the figure.

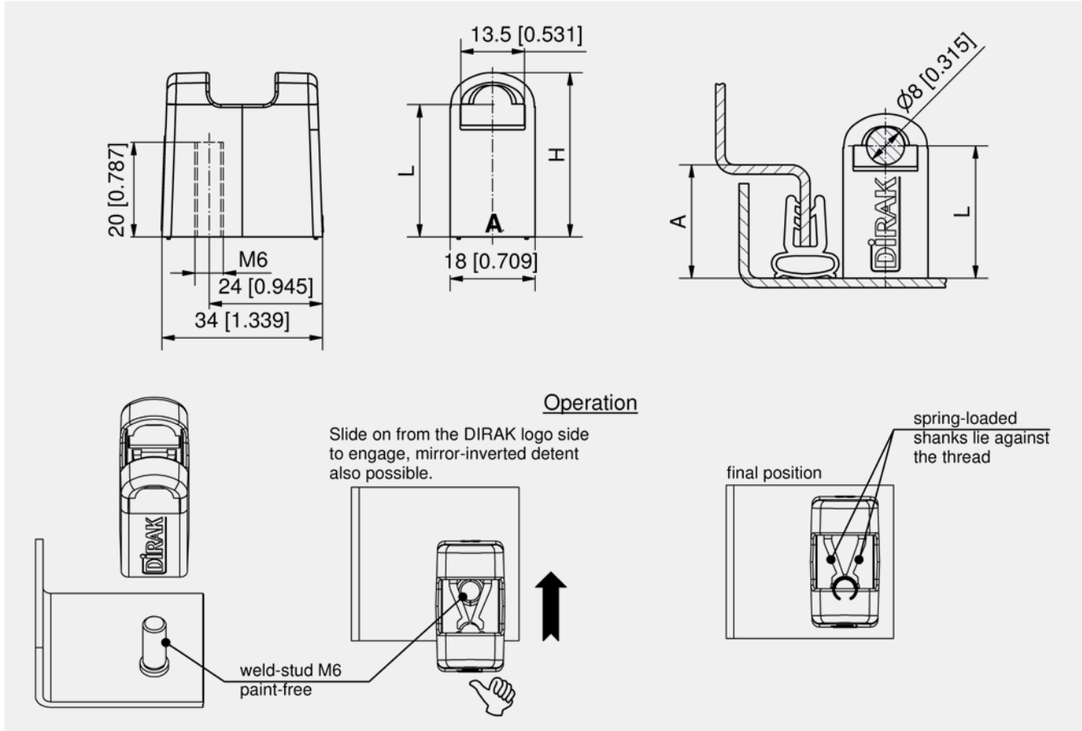

Rod guide

	Part Number	Height H	A = bending	L	Installation type	Delivery Unit
a)	200-3616.54-00000	35 mm	A24	28 mm	tool-less	1 pc.
b)	200-3617.54-00000	37 mm	A26	30 mm	tool-less	1 pc.
c)	200-3618.54-00000	39 mm	A28	32 mm	tool-less	1 pc.

all product details ▸ on DIRAK.com

1-193

Cams L35/45 Steel

RoHS WEEE

Advantages

- Cams with ramp and stop with 35mm and 45mm length for 1-point locking.
- 3-Point cam for 3-point locking.
- Rod control for 2-point locking.

Materials

- **Cams:** steel, zinc plated

Remarks

1. ramp 3mm
2. stroke 18mm at 90° rotation
3. c-clips (are included)

Cams L45 and 3-point cams with marking **e)** are supplied in 2 parts.

Slide shoe for cams 35 and 45mm, see product system 1-103.

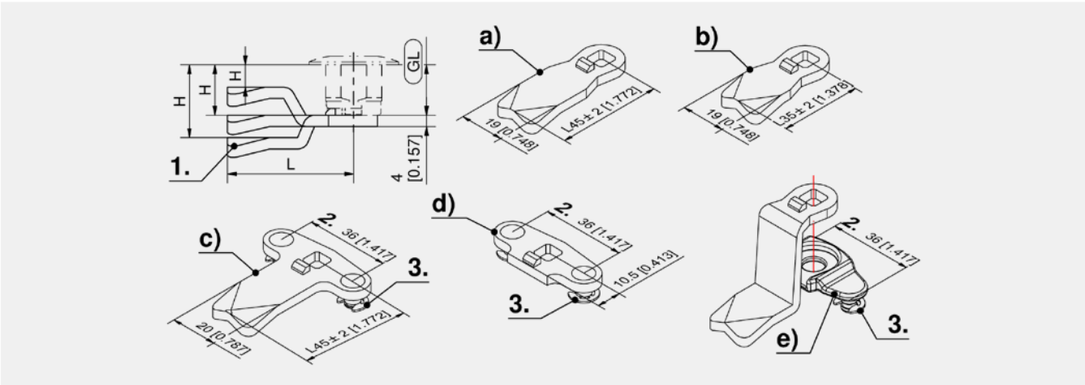

Cams, L45, H-dimensions

	Part Number	GI12	GI18	GI20	GI22	GI30	GI32	GI36	GI40	GI42	GI46	GI50	GI56	GI60	GI66	Delivery Unit
a)	200-0402.00-00000		2 mm	4 mm	6 mm	14 mm	16 mm	20 mm	24 mm	26 mm	30 mm	34 mm	40 mm	44 mm	50 mm	10 pcs.
a)	200-0404.00-00000		4 mm	6 mm	8 mm	16 mm	18 mm	22 mm	26 mm	28 mm	32 mm	36 mm	42 mm	46 mm	52 mm	10 pcs.
a)	200-0406.00-00000		6 mm	8 mm	10 mm	18 mm	20 mm	24 mm	28 mm	30 mm	34 mm	38 mm	44 mm	48 mm	54 mm	10 pcs.
a)	200-0408.00-00000		8 mm	10 mm	12 mm	20 mm	22 mm	26 mm	30 mm	32 mm	36 mm	40 mm	46 mm	50 mm	56 mm	10 pcs.
a)	200-0410.00-00000		10 mm	12 mm	14 mm	22 mm	24 mm	28 mm	32 mm	34 mm	38 mm	42 mm	48 mm	52 mm	58 mm	10 pcs.
a)	200-0413.00-00000	7 mm	13 mm	15 mm	17 mm	25 mm	27 mm	31 mm	35 mm	37 mm	41 mm	45 mm	51 mm	55 mm	61 mm	10 pcs.
a)	200-0414.00-00000	8 mm	14 mm	16 mm	18 mm	26 mm	28 mm	32 mm	36 mm	38 mm	42 mm	46 mm	52 mm	56 mm	62 mm	10 pcs.
a)	200-0416.00-00000	10 mm	16 mm	18 mm	20 mm	28 mm	30 mm	34 mm	38 mm	40 mm	44 mm	48 mm	54 mm	58 mm	64 mm	10 pcs.
a)	200-0418.00-00000	12 mm	18 mm	20 mm	22 mm	30 mm	32 mm	36 mm	40 mm	42 mm	46 mm	50 mm	56 mm	60 mm	66 mm	10 pcs.
a)	200-0420.00-00000	14 mm	20 mm	22 mm	24 mm	32 mm	34 mm	38 mm	42 mm	44 mm	48 mm	52 mm	58 mm	62 mm	68 mm	10 pcs.
a)	200-0422.00-00000	16 mm	22 mm	24 mm	26 mm	34 mm	36 mm	40 mm	44 mm	46 mm	50 mm	54 mm	60 mm	64 mm	70 mm	10 pcs.
a)	200-0424.00-00000	18 mm	24 mm	26 mm	28 mm	36 mm	38 mm	42 mm	46 mm	48 mm	52 mm	56 mm	62 mm	66 mm	72 mm	10 pcs.
a)	200-0425.00-00000	19 mm	25 mm	27 mm	29 mm	37 mm	39 mm	43 mm	47 mm	49 mm	53 mm	57 mm	63 mm	67 mm	73 mm	10 pcs.
a)	200-0426.00-00000	20 mm	26 mm	28 mm	30 mm	38 mm	40 mm	44 mm	48 mm	50 mm	54 mm	58 mm	64 mm	68 mm	74 mm	10 pcs.
a)	200-0428.00-00000	22 mm	28 mm	30 mm	32 mm	40 mm	42 mm	46 mm	50 mm	52 mm	56 mm	60 mm	66 mm	70 mm	76 mm	10 pcs.
a)	200-0430.00-00000	24 mm	30 mm	32 mm	34 mm	42 mm	44 mm	48 mm	52 mm	54 mm	58 mm	62 mm	68 mm	72 mm	78 mm	10 pcs.
a)	200-0432.00-00000	26 mm	32 mm	34 mm	36 mm	44 mm	46 mm	50 mm	54 mm	56 mm	60 mm	64 mm	70 mm	74 mm	80 mm	10 pcs.
a)	200-0434.00-00000	28 mm	34 mm	36 mm	38 mm	46 mm	48 mm	52 mm	56 mm	58 mm	62 mm	66 mm	72 mm	76 mm	82 mm	10 pcs.
a)	200-0435.00-00000	29 mm	35 mm	37 mm	39 mm	47 mm	49 mm	53 mm	57 mm	59 mm	63 mm	67 mm	73 mm	77 mm	83 mm	10 pcs.
a)	200-0436.00-00000	30 mm	36 mm	38 mm	40 mm	48 mm	50 mm	54 mm	58 mm	60 mm	64 mm	68 mm	74 mm	78 mm	84 mm	10 pcs.
a)	200-0438.00-00000	32 mm	38 mm	40 mm	42 mm	50 mm	52 mm	56 mm	60 mm	62 mm	66 mm	70 mm	76 mm	80 mm	86 mm	10 pcs.
a)	200-0440.00-00000	34 mm	40 mm	42 mm	44 mm	52 mm	54 mm	58 mm	62 mm	64 mm	68 mm	72 mm	78 mm	82 mm	88 mm	10 pcs.
a)	200-0442.00-00000	36 mm	42 mm	44 mm	46 mm	54 mm	56 mm	60 mm	64 mm	66 mm	70 mm	74 mm	80 mm	84 mm	90 mm	10 pcs.
a)	200-0444.00-00000	38 mm	44 mm	46 mm	48 mm	56 mm	58 mm	62 mm	66 mm	68 mm	72 mm	76 mm	82 mm	86 mm	92 mm	10 pcs.
e)	200-0445.00-00000	39 mm	45 mm	47 mm	49 mm	57 mm	59 mm	63 mm	67 mm	69 mm	73 mm	77 mm	83 mm	87 mm	93 mm	10 pcs.
e)	200-0447.00-00000	41 mm	47 mm	49 mm	51 mm	59 mm	61 mm	65 mm	69 mm	71 mm	75 mm	79 mm	85 mm	89 mm	95 mm	10 pcs.
e)	200-0450.00-00000	44 mm	50 mm	52 mm	54 mm	62 mm	64 mm	68 mm	72 mm	74 mm	78 mm	82 mm	88 mm	92 mm	98 mm	10 pcs.
a)	200-0453.00-00000	47 mm	53 mm	55 mm	57 mm	65 mm	67 mm	71 mm	75 mm	77 mm	81 mm	85 mm	91 mm	95 mm	101 mm	10 pcs.
a)	200-0455.00-00000	49 mm	55 mm	57 mm	59 mm	67 mm	69 mm	73 mm	77 mm	79 mm	83 mm	87 mm	93 mm	97 mm	103 mm	10 pcs.

all product details on DIRAK.com
1-102

Cams, L35

	Part Number	GI12	GI18	GI20	GI22	GI30	GI32	GI36	GI40	GI42	GI46	GI50	GI56	GI60	GI66	Delivery Unit
b)	200-0606.00-00000		6 mm	8 mm	10 mm	18 mm	20 mm	24 mm	28 mm	30 mm	34 mm	38 mm	44 mm	48 mm	54 mm	10 pcs.
b)	200-0608.00-00000		8 mm	10 mm	12 mm	20 mm	22 mm	26 mm	30 mm	32 mm	36 mm	40 mm	46 mm	50 mm	56 mm	10 pcs.
b)	200-0610.00-00000		10 mm	12 mm	14 mm	22 mm	24 mm	28 mm	32 mm	34 mm	38 mm	42 mm	48 mm	52 mm	58 mm	10 pcs.
b)	200-0613.00-00000	7 mm	13 mm	15 mm	17 mm	25 mm	27 mm	31 mm	35 mm	37 mm	41 mm	45 mm	51 mm	55 mm	61 mm	10 pcs.
b)	200-0614.00-00000	8 mm	14 mm	16 mm	18 mm	26 mm	28 mm	32 mm	36 mm	38 mm	42 mm	46 mm	52 mm	56 mm	62 mm	10 pcs.
b)	200-0616.00-00000	10 mm	16 mm	18 mm	20 mm	28 mm	30 mm	34 mm	38 mm	40 mm	44 mm	48 mm	54 mm	58 mm	64 mm	10 pcs.
b)	200-0618.00-00000	12 mm	18 mm	20 mm	22 mm	30 mm	32 mm	36 mm	40 mm	42 mm	46 mm	50 mm	56 mm	60 mm	66 mm	10 pcs.
b)	200-0620.00-00000	14 mm	20 mm	22 mm	24 mm	32 mm	34 mm	38 mm	42 mm	44 mm	48 mm	52 mm	58 mm	62 mm	68 mm	10 pcs.
b)	200-0622.00-00000	16 mm	22 mm	24 mm	26 mm	34 mm	36 mm	40 mm	44 mm	46 mm	50 mm	54 mm	60 mm	64 mm	70 mm	10 pcs.
b)	200-0624.00-00000	18 mm	24 mm	26 mm	28 mm	36 mm	38 mm	42 mm	46 mm	48 mm	52 mm	56 mm	62 mm	66 mm	72 mm	10 pcs.
b)	200-0625.00-00000	19 mm	25 mm	27 mm	29 mm	37 mm	39 mm	43 mm	47 mm	49 mm	53 mm	57 mm	63 mm	67 mm	73 mm	10 pcs.
b)	200-0626.00-00000	20 mm	26 mm	28 mm	30 mm	38 mm	40 mm	44 mm	48 mm	50 mm	54 mm	58 mm	64 mm	68 mm	74 mm	10 pcs.
a)	200-0628.00-00000	22 mm	28 mm	30 mm	32 mm	40 mm	42 mm	46 mm	50 mm	52 mm	56 mm	60 mm	66 mm	70 mm	76 mm	10 pcs.
b)	200-0630.00-00000	24 mm	30 mm	32 mm	34 mm	42 mm	44 mm	48 mm	52 mm	54 mm	58 mm	62 mm	68 mm	72 mm	78 mm	10 pcs.
b)	200-0635.00-00000	29 mm	35 mm	37 mm	39 mm	47 mm	49 mm	53 mm	57 mm	59 mm	63 mm	67 mm	73 mm	77 mm	83 mm	10 pcs.
a)	200-0638.00-00000	32 mm	38 mm	40 mm	42 mm	50 mm	52 mm	56 mm	60 mm	62 mm	66 mm	70 mm	76 mm	80 mm	86 mm	10 pcs.
b)	200-0640.00-00000	34 mm	40 mm	42 mm	44 mm	52 mm	54 mm	58 mm	62 mm	64 mm	68 mm	72 mm	78 mm	82 mm	88 mm	10 pcs.
b)	200-0642.00-00000	36 mm	42 mm	44 mm	46 mm	54 mm	56 mm	60 mm	64 mm	66 mm	70 mm	74 mm	80 mm	84 mm	90 mm	10 pcs.
b)	200-0644.00-00000	38 mm	44 mm	46 mm	48 mm	56 mm	58 mm	62 mm	66 mm	68 mm	72 mm	76 mm	82 mm	86 mm	92 mm	10 pcs.

3-point cams

	Part Number	GI12	GI18	GI20	GI22	GI30	GI32	GI36	GI40	GI42	GI46	GI50	GI56	GI60	GI66	Delivery Unit
c)	200-9504.00-00000		4 mm	6 mm	8 mm	16 mm	18 mm	22 mm	26 mm	28 mm	32 mm	36 mm	42 mm	46 mm	52 mm	1 pc.
c)	200-9506.00-00000		6 mm	8 mm	10 mm	18 mm	20 mm	24 mm	28 mm	30 mm	34 mm	38 mm	44 mm	48 mm	54 mm	1 pc.
c)	200-9508.00-00000		8 mm	10 mm	12 mm	20 mm	22 mm	26 mm	30 mm	32 mm	36 mm	40 mm	46 mm	50 mm	56 mm	1 pc.
c)	200-9510.00-00000		10 mm	12 mm	14 mm	22 mm	24 mm	28 mm	32 mm	34 mm	38 mm	42 mm	48 mm	52 mm	58 mm	1 pc.
c)	200-9513.00-00000	7 mm	13 mm	15 mm	17 mm	25 mm	27 mm	31 mm	35 mm	37 mm	41 mm	45 mm	51 mm	55 mm	61 mm	1 pc.
c)	200-9514.00-00000	8 mm	14 mm	16 mm	18 mm	26 mm	28 mm	32 mm	36 mm	38 mm	42 mm	46 mm	52 mm	56 mm	62 mm	1 pc.
c)	200-9516.00-00000	10 mm	16 mm	18 mm	20 mm	28 mm	30 mm	34 mm	38 mm	40 mm	44 mm	48 mm	54 mm	58 mm	64 mm	1 pc.
c)	200-9518.00-00000	12 mm	18 mm	20 mm	22 mm	30 mm	32 mm	36 mm	40 mm	42 mm	46 mm	50 mm	56 mm	60 mm	66 mm	1 pc.
c)	200-9520.00-00000	14 mm	20 mm	22 mm	24 mm	32 mm	34 mm	38 mm	42 mm	44 mm	48 mm	52 mm	58 mm	62 mm	68 mm	1 pc.
c)	200-9522.00-00000	16 mm	22 mm	24 mm	26 mm	34 mm	36 mm	40 mm	44 mm	46 mm	50 mm	54 mm	60 mm	64 mm	70 mm	1 pc.
c)	200-9524.00-00000	18 mm	24 mm	26 mm	28 mm	36 mm	38 mm	42 mm	46 mm	48 mm	52 mm	56 mm	62 mm	66 mm	72 mm	1 pc.
c)	200-9525.00-00000	19 mm	25 mm	27 mm	29 mm	37 mm	39 mm	43 mm	47 mm	49 mm	53 mm	57 mm	63 mm	67 mm	73 mm	1 pc.
b)	200-9526.00-00000	20 mm	26 mm	28 mm	30 mm	38 mm	40 mm	44 mm	48 mm	50 mm	54 mm	58 mm	64 mm	68 mm	74 mm	1 pc.
c)	200-9528.00-00000	22 mm	28 mm	30 mm	32 mm	40 mm	42 mm	46 mm	50 mm	52 mm	56 mm	60 mm	66 mm	70 mm	76 mm	1 pc.
c)	200-9530.00-00000	24 mm	30 mm	32 mm	34 mm	42 mm	44 mm	48 mm	52 mm	54 mm	58 mm	62 mm	68 mm	72 mm	78 mm	1 pc.
c)	200-9532.00-00000	26 mm	32 mm	34 mm	36 mm	44 mm	46 mm	50 mm	54 mm	56 mm	60 mm	64 mm	70 mm	74 mm	80 mm	1 pc.
c)	200-9534.00-00000	28 mm	34 mm	36 mm	38 mm	46 mm	48 mm	52 mm	56 mm	58 mm	62 mm	66 mm	72 mm	76 mm	82 mm	1 pc.
c)	200-9535.00-00000	29 mm	35 mm	37 mm	39 mm	47 mm	49 mm	53 mm	57 mm	59 mm	63 mm	67 mm	73 mm	77 mm	83 mm	1 pc.
c)	200-9536.00-00000	30 mm	36 mm	38 mm	40 mm	48 mm	50 mm	54 mm	58 mm	60 mm	64 mm	68 mm	74 mm	78 mm	84 mm	1 pc.
c)	200-9538.00-00000	32 mm	38 mm	40 mm	42 mm	50 mm	52 mm	56 mm	60 mm	62 mm	66 mm	70 mm	76 mm	80 mm	86 mm	1 pc.
c)	200-9540.00-00000	34 mm	40 mm	42 mm	44 mm	52 mm	54 mm	58 mm	62 mm	64 mm	68 mm	72 mm	78 mm	82 mm	88 mm	1 pc.
c)	200-9542.00-00000	36 mm	42 mm	44 mm	46 mm	54 mm	56 mm	60 mm	64 mm	66 mm	70 mm	74 mm	80 mm	84 mm	90 mm	1 pc.
c)	200-9544.00-00000	38 mm	44 mm	46 mm	48 mm	56 mm	58 mm	62 mm	66 mm	68 mm	72 mm	76 mm	82 mm	86 mm	92 mm	1 pc.
e)	200-9545.00-00000	39 mm	45 mm	47 mm	49 mm	57 mm	59 mm	63 mm	67 mm	69 mm	73 mm	77 mm	83 mm	87 mm	93 mm	1 pc.
e)	200-9547.00-00000	41 mm	47 mm	49 mm	51 mm	59 mm	61 mm	65 mm	69 mm	71 mm	75 mm	79 mm	85 mm	89 mm	95 mm	1 pc.
e)	200-9550.00-00000	44 mm	50 mm	52 mm	54 mm	62 mm	64 mm	68 mm	72 mm	74 mm	78 mm	82 mm	88 mm	92 mm	98 mm	1 pc.

Rod control

	Part Number	Stop	Installation type	Delivery Unit
d)	200-9599.00-00000	Yes	screw-on	1 pc.

Accessories
157 1-103 **Slide Shoe for Cams**
160 1-260 **Hooked Cam**
161 1-261 **Cams with Ramp**
161 1-262 **Cams variable**
294 2-150 **3-Point Cam L45, Rod Control**
175, 295 2-151 **2-, 3- and 4-Point Cam Adapter**
178, 298 2-151.01 **3-Point Adapter with H-Dimension Adjustment**
176, 296 2-151.04 **3-Point Cam Adapter**

3-Point Cam L45, Rod Control

[2-150]

Advantages

- 3-point cam with rod support, **without** stop.
- For swinghandles **without** cam stop.
- The 4mm high shoulder (Ø10) makes a straight rod (without bending) run over the dustcap.
- 2 C-clips are included.

Materials

- **Cam:** steel, zinc plated

Remarks

1. ramp 3mm
2. swinghandle without cam stop

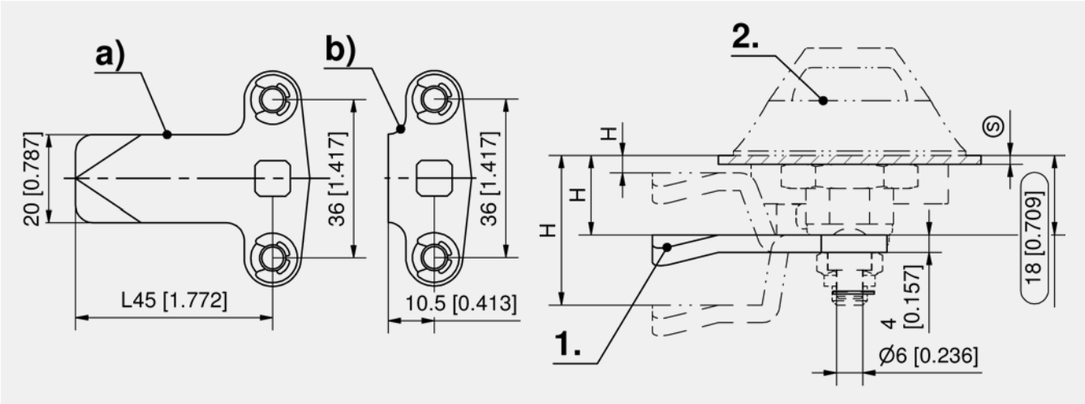

3- or 4-point cams, L45

	Part Number	H-dimension	Delivery Unit
a)	207-9504.00-00000	4 mm	1 pc.
a)	207-9506.00-00000	6 mm	1 pc.
a)	207-9508.00-00000	8 mm	1 pc.
a)	207-9510.00-00000	10 mm	1 pc.
a)	207-9513.00-00000	13 mm	1 pc.
a)	207-9514.00-00000	14 mm	1 pc.
a)	207-9516.00-00000	16 mm	1 pc.
a)	207-9518.00-00000	18 mm	1 pc.
a)	207-9520.00-00000	20 mm	1 pc.
a)	207-9522.00-00000	22 mm	1 pc.
a)	207-9524.00-00000	24 mm	1 pc.
a)	207-9525.00-00000	25 mm	1 pc.
a)	207-9526.00-00000	26 mm	1 pc.

	Part Number	H-dimension	Delivery Unit
a)	207-9528.00-00000	28 mm	1 pc.
a)	207-9530.00-00000	30 mm	1 pc.
a)	207-9532.00-00000	32 mm	1 pc.
a)	207-9534.00-00000	34 mm	1 pc.
a)	207-9535.00-00000	35 mm	1 pc.
a)	207-9536.00-00000	36 mm	1 pc.
a)	207-9538.00-00000	38 mm	1 pc.
a)	207-9540.00-00000	40 mm	1 pc.
a)	207-9542.00-00000	42 mm	1 pc.
a)	207-9544.00-00000	44 mm	1 pc.
a)	207-9545.00-00000	45 mm	1 pc.
a)	207-9547.00-00000	47 mm	1 pc.
a)	207-9550.00-00000	50 mm	1 pc.

Rod control

	Part Number	Stop	Delivery Unit
b)	207-9599.00-00000	No	1 pc.

Accessories
179, 283 1-170 **Round Rods with Eye**
180, 284 1-180 **Round Rods for Adapter**

2-150
◂ all product details on DIRAK.com

2-, 3- and 4-Point Cam Adapter

[2-151]

Advantages

- 3-point cam adapter for cams of product system 1-102.
- With and without 90° stop.
- The raised rod stub is necessary for swinghandles, enabling the lower rod passing over the lower cap.
- 4-point cam adapter: with additional linkage.
- For those applications, where beyond the standard control of 2 locking-rods, an additional rod can be used. E.g. controlling a switch or defeater-mechanism.

Materials

- **3-point cam adapter and 4-point cam adapter:** zinc die, zinc plated

Remarks

Incl. 2 c-clips

Note: H-dimension of cam (C) increases by 4mm. E.g. cam 200-0418 results in an H-dimension of 22mm.

Please pay attention to the screw length: screw should enter at least 6mm.

1. with stop
2. wthout stop

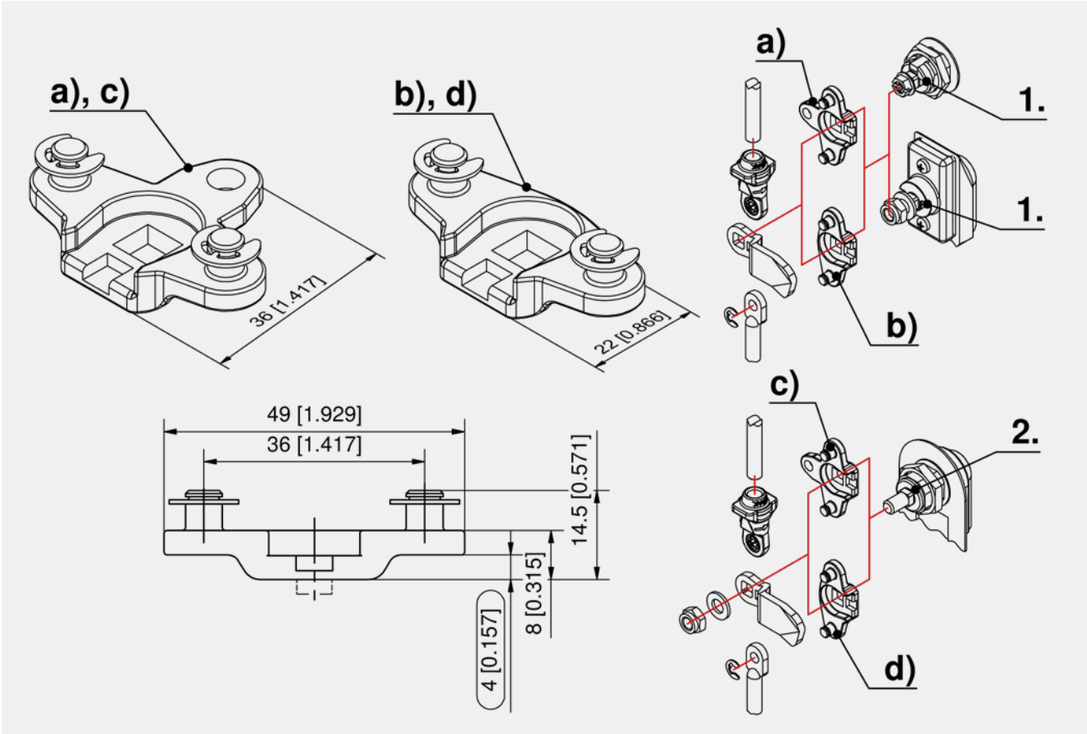

Adapter for 3-point cam

	Part Number	Stop	2-point locking	3-point locking	4-point locking	Installation type	Delivery Unit
a)	200-9595.00-00000	Yes	Yes	Yes	Yes	screw-on	1 pc.
b)	200-9596.00-00000	Yes	Yes	Yes	No	screw-on	1 pc.
c)	207-9595.00-00000	No	Yes	Yes	Yes	screw-on	1 pc.
d)	207-9596.00-00000	No	Yes	Yes	No	screw-on	1 pc.

Accessories
154, 292 1-102 **Cams L35/45 Steel**

all product details ▸ on DIRAK.com
2-151

3-Point Cam Adapter

[2-151.04]

M6
4Nm

RoHS
WEEE

Advantages

- 3-point cam adapter for cams of product system 1-102.
- The adapter is attached to the back of the cam does not affect the H-dimension.

Materials

- **3-point cam adapter:** zinc die, zinc plated

Remarks

Incl. 2 c-clips

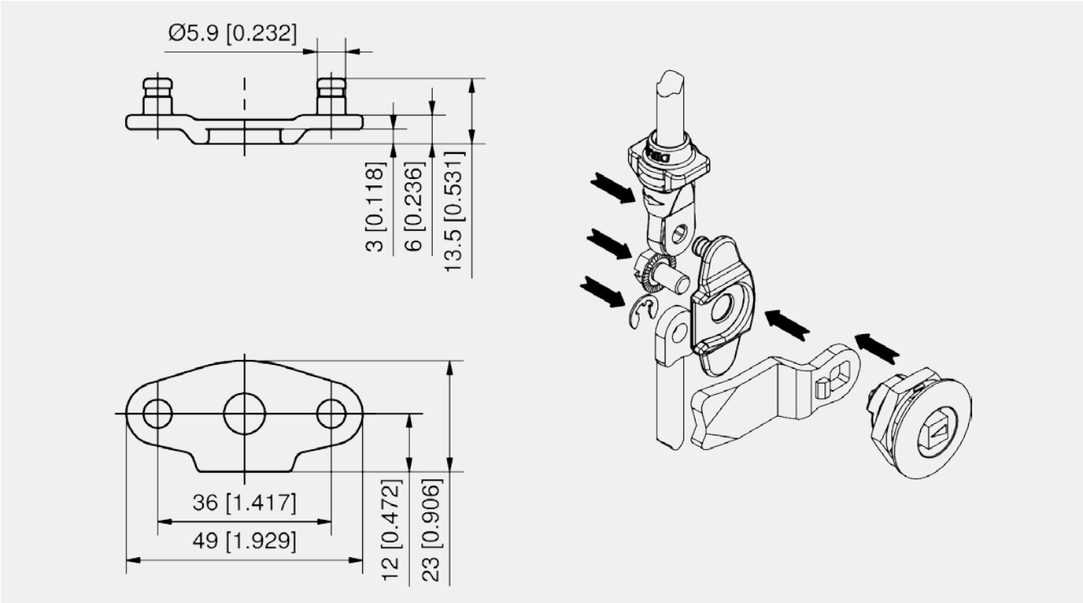

Cam adapter

Part Number	3-point locking	Installation type	Delivery Unit
207-9589.00-00000	Yes	screw-on	1 pc.

2-151.04
all product details on DIRAK.com

3- and 4-Point Cam Adapter Stainless Steel

[7-106.02]

Advantages

- For use in combination with standard cams see product system 1-102 and 7-080, used for 3- and 4-point latching applications.
- For 4-point application use additional link.
- For those applications, where beyond the standard control of 2 locking-rods, an additional rod can be used (e.g. controlling a switch or defeatermechanism).
- The adapter is attached to the back of the cam and does not affect the H-dimension!

Materials

- **Multipoint cam adapter:** AISI 304

Remarks

3- and 4-point cam adapter alternative to 2- or 3-point cam, see product system 7-105.

1. loop

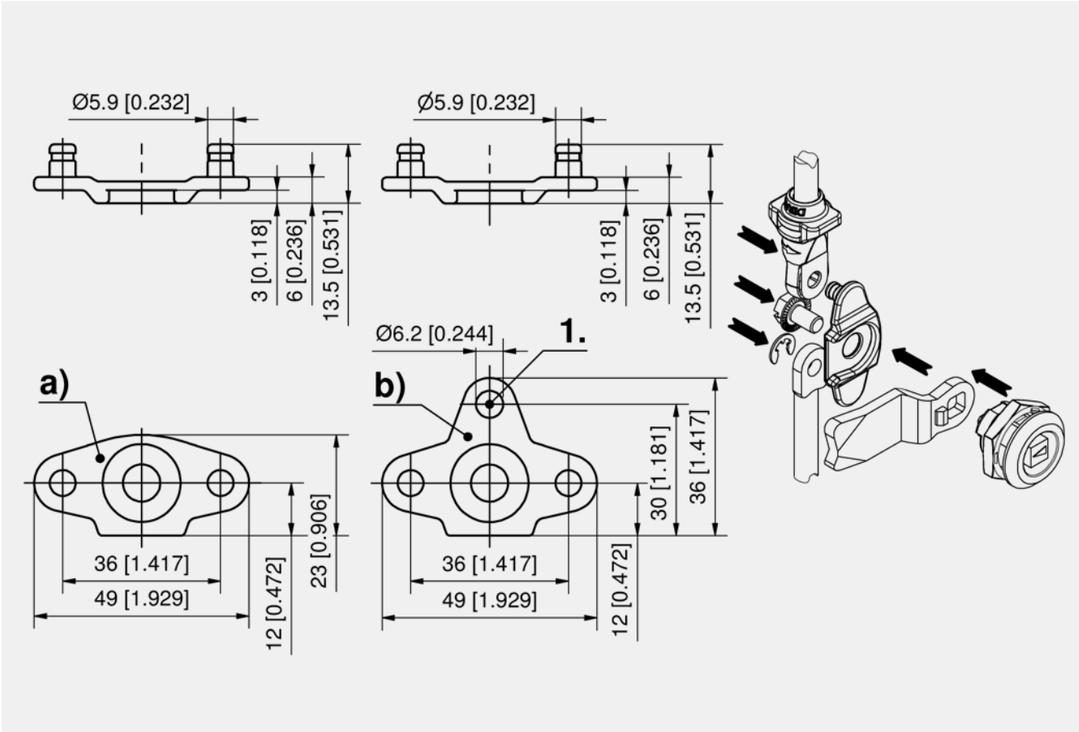

Adapter for 3-point cam

	Part Number	3-point locking	4-point locking	Installation type	Delivery Unit
a)	207-9590.00-00000	Yes	No	screw-on	1 pc.
b)	207-9592.00-00000	Yes	Yes	screw-on	1 pc.

all product details on DIRAK.com
7-106.02

3-Point Adapter with H-Dimension Adjustment [2-151.01]

Advantages

- 3-point cam adapter for cams Pr20.1, tool-less adjustable.
- RH/ LH application.
- Axial adjustable.
- Usable with standard cams.
- Readjustable at any time.
- 3-point locking system.
- Knurled wheel with thread M10.

Materials

- **3-Point cam adapter:** zinc die, zinc plated

Remarks

Incl. 2 c-clips

1. recess for cams with stop

2. detent

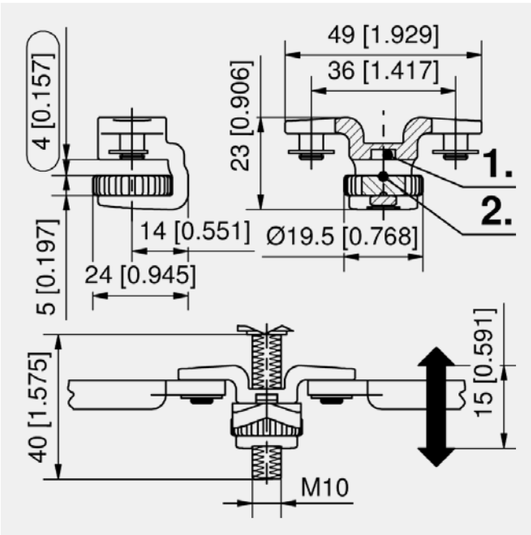

Adapter for 3-point cam

	Part Number	Version	3-point locking	Installation type	Delivery Unit
	200-9632.00-00000	knurled wheel M10	Yes	tool-less	1 pc.

3-Point Cam Adapter 45° zinc die [2-151.03]

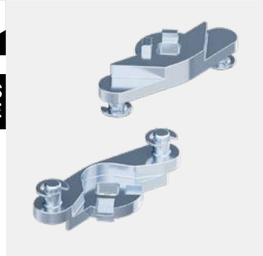

Advantages

- 3-point cam adapter with stop made of zinc die.

Materials

- **3-point cam adapter:** zinc die, zinc plated
- **Locking washer:** steel, zinc plated

Remarks

All cams of product system 1-102 can be applied.

Note: H-dimension of cam increases by 4mm. E.g. cam 200-0418 results in a H-dimension of 22mm. See product system 2-151.

1. stroke 35mm

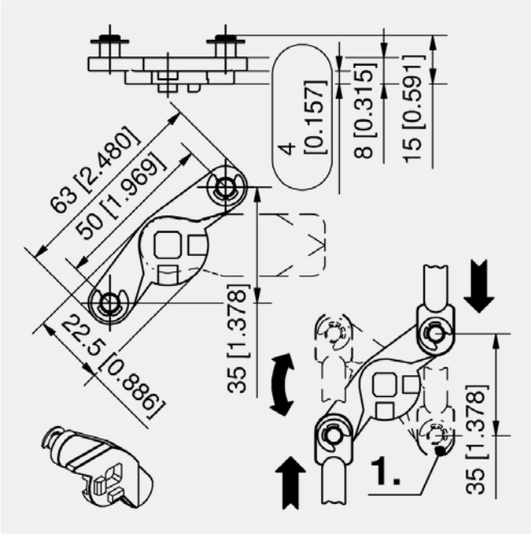

Adapter for 3-point cam

Part Number	Stop	2-point locking	3-point locking	Delivery Unit
200-9594.00-00000	Yes	Yes	Yes	1 pc.

*	Function extension
179, 283	1-170 **Round Rods with Eye**

2-151.01 2-151.03

all product details on DIRAK.com

3-Point Cam Adapter 45° Stainless Steel [7-106.01]

Advantages

- 3-point cam adapter with and without stop.

Materials

- **3-point cam adapter:** AISI 316
- **Locking washer:** AISI 304

Remarks

1. stroke 35mm

All cams of product system 7-105 under a) and b) can be applied.

Note: H-dimension of cam increases by 4mm. E.g. cam 200-0518 results in an H-dimension of 22mm. See product system 2-151.

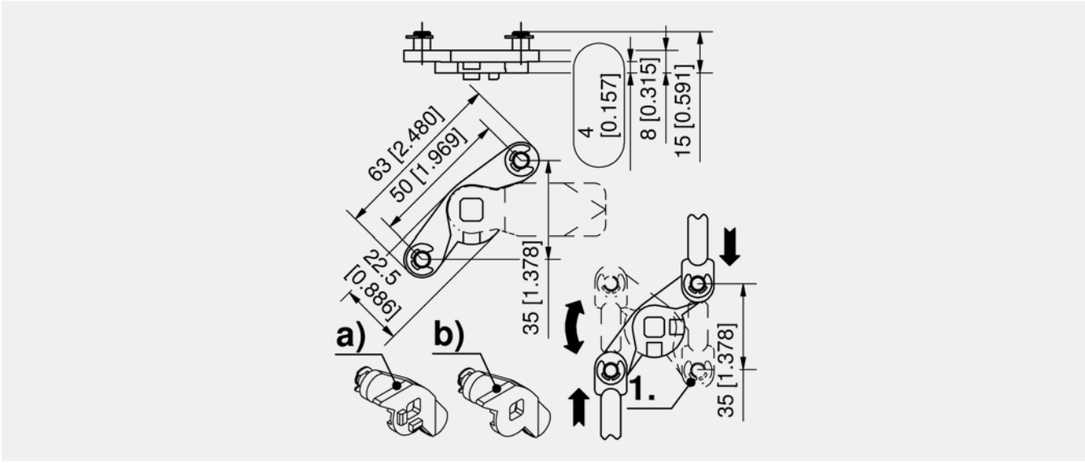

Adapter for 3-point cam

	Part Number	Stop	2-point locking	3-point locking	Delivery Unit
a)	200-9598.00-00000	Yes	Yes	Yes	1 pc.
b)	207-9594.00-00000	No	Yes	Yes	1 pc.

+	Accessories
156	7-105 **Cams L35/45 Stainless Steel**
182, 286	7-106 **Round Rods Stainless Steel**

all product details on DIRAK.com

7-106.01

H-Dimension Adjustment

[2-151.02]

RoHS WEEE

Advantages

- This H-dimension adjustment is suitable for all M10 square threaded rods.
- Tool-less adjustment for standard cams 1-102.
- Variable and easy adjustment with knurled wheel.
- 0.25mm of adjustment per click.
- Vibration-proof.
- Readjustment possible at any time (e.g. compressed sealing).
- For cams with and without stop.

Materials

- **Catch:** PA, black
- **Knurled wheel:** zinc die, zinc plated

Remarks

1. recess for cams with stop
2. detent (6x)

b) quarter-turn

c) cams PS 1-102 and 1-102.01

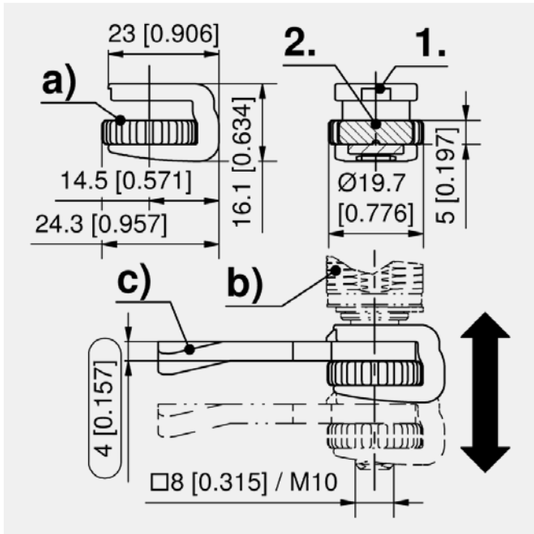

Catch with knurled wheel

	Part Number	Thread size	Installation type	Delivery Unit
a)	248-9901.00-00000	M10	tool-less	20 pcs.

H-Dimension Adjustment Stainless Steel

[7-077.02]

RoHS WEEE

Advantages

- Suitable for all M10 square threaded rods.
- For tool-less adjustment of cams (with and without stop).
- Variable and easy adjustment with knurled wheel.
- 0.25mm of adjustment per click.
- Readjustment possible (e.g. compressed sealing).
- Vibration-proof.

Materials

- **Catch:** AISI 301
- **Knurled wheel:** AISI 316

Remarks

1. recess for cams with stop
2. detent

b) quarter-turn

c) cams PS 7-105 and PS 7-105.01

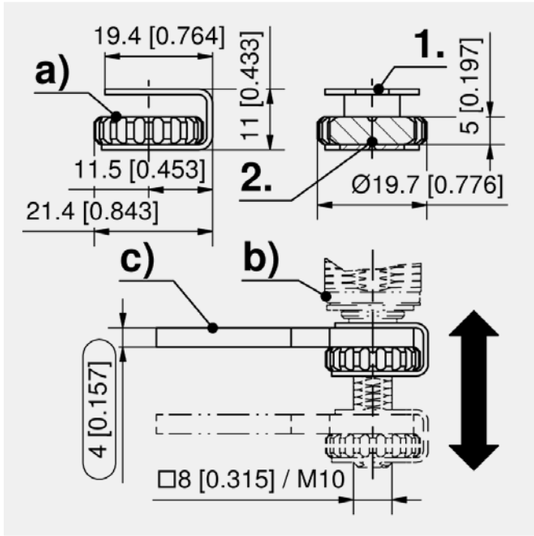

Catch with knurled wheel

	Part Number	Thread size	Installation type	Delivery Unit
a)	248-9904.00-00000	M10	tool-less	1 pc.

2-151.02 7-077.02
all product details on DIRAK.com

Sliding Cap

[2-091]

RoHS WEEE

Advantages

- Protects the cylinder cap.
- Can be assembled on all swinghandles, for which a swiveling cylinder cover is provided.
- The existing hole is used.
- For profile cylinder 40 und 45mm, also for raised profile cylinders.
- Sliding cap is sealable.

Materials

- **Sliding cap:** zinc die, black
- **Axis seizing collar:** stainless steel

Remarks

For swinghandles as supplementary product for product system 2-090, 2-090DST, 2-090.01, 2-090.03, 2-100.01, 2-100.02, 2-110, 2-120, 2-300, 2-340, 2-400 and 3-150.

1. axis seizing collar
2. the swinghandle increases by 9mm

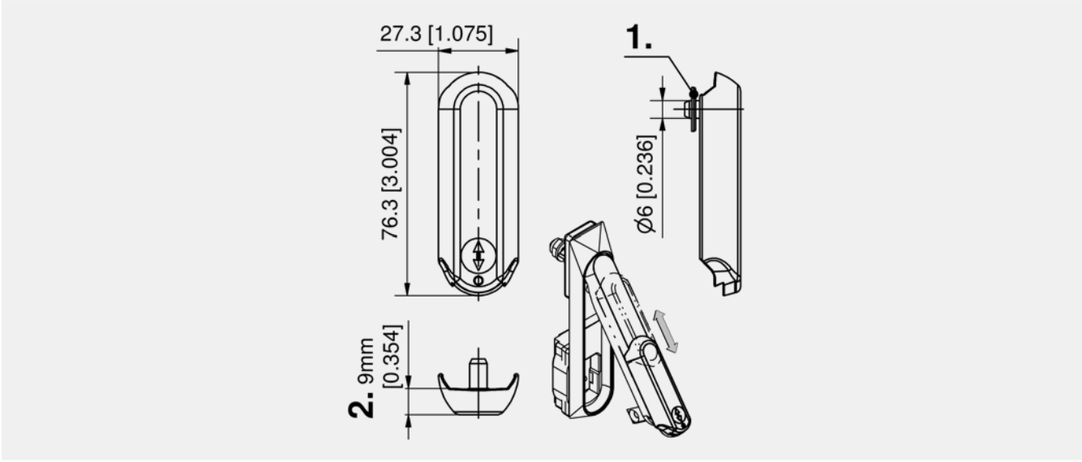

Sliding cap

Part Number	Installation type	Delivery Unit
207-9702.00-00000	screw-on	1 pc.

all product details on DIRAK.com
2-091

Grounding Clip Stainless Steel

[3-011]

RoHS WEEE

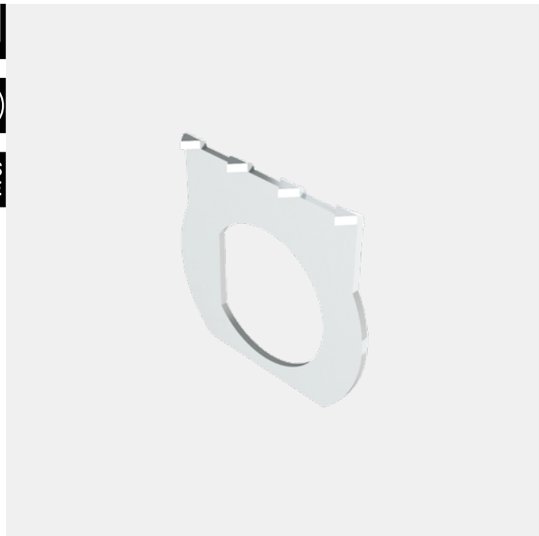

Advantages

- Grounding clip for rod latch system and bearing plate.
- Tested by the VDE testing and certification Institute in Offenbach. Passed all tests according to DIN (VDE 0100 part 540): 2012-06 as well as DIN EN 61439-1 (VDE 0660 part 600): 2012-06 section 8.4.3.2.2 and 10.5.2.
- Anodized and powder coated (epoxy and polyester) panels were tested with a thickness of up to 240µm.

Materials

- **Grounding clip:** AISI 301

Remarks

1. back of the latching devices
2. flat rod latch
3. bearing, cam / 3-point cam
4. clamping torque 2 Nm

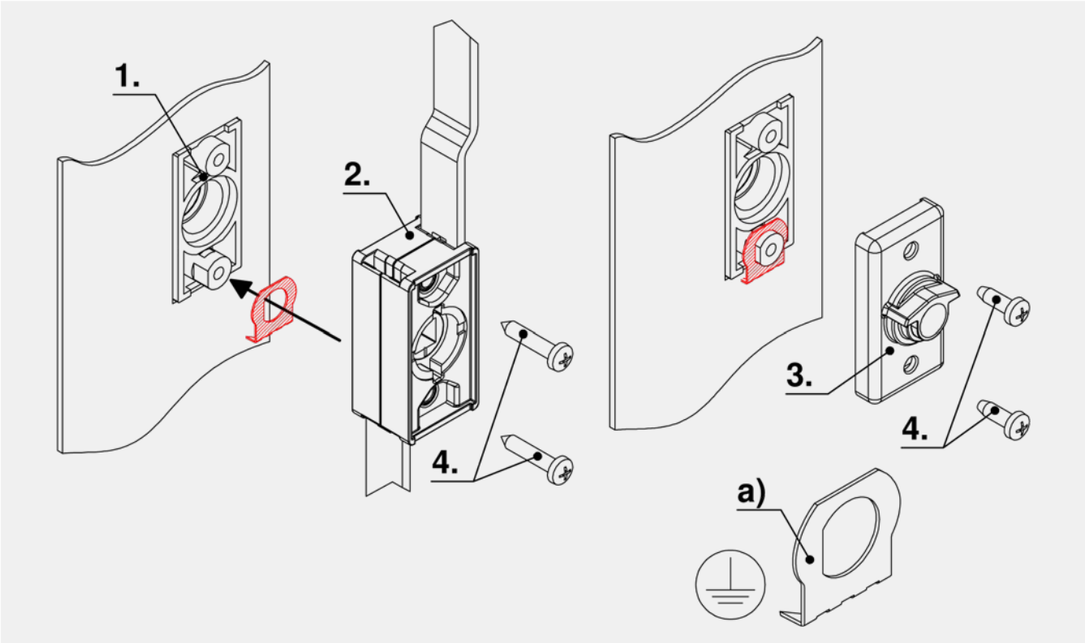

Grounding clip

	Part Number	Delivery Unit
a)	208-1206.93-00000	1 pc.

3-011

◂ all product details on DIRAK.com

Inserts

[2-141]

RoHS WEEE

Advantages

- Inserts with spring washer for swinghandle see product system 2-070, 2-080.01, 2-080.02, 2-090.03, 3-070, 3-155.02 and 6-111.02.
- Insert sets consist of insert and spring washer.

Materials

- **Insert:** zinc die, chrome plated
- **Wave washer:** spring steel, zinc plated

Remarks

Suitable keys see product system 6-100 and 6-101.

For further versions please contact DIRAK.

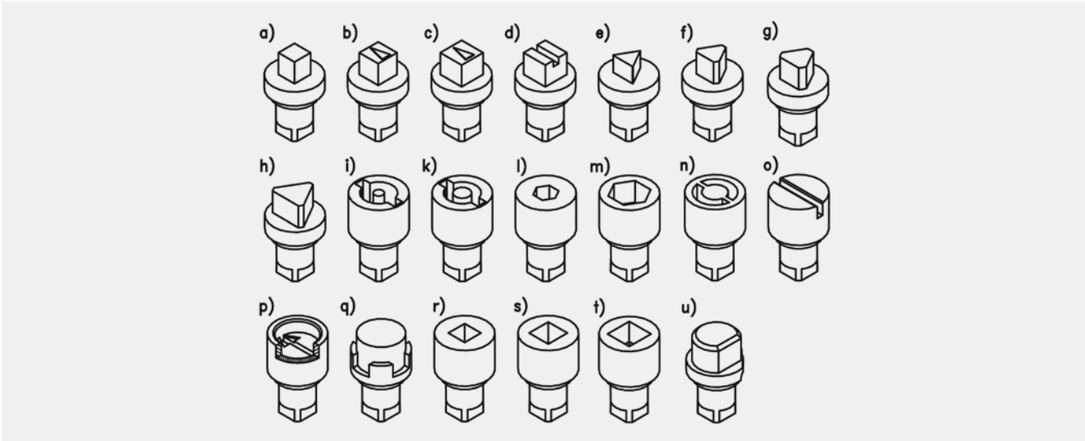

Inserts

	Part Number	Insert	Delivery Unit
a)	211-9501.00-00000	Square 6mm	1 pc.
b)	211-9502.00-00000	Square 7mm	1 pc.
c)	211-9503.00-00000	Square 8mm	1 pc.
d)	211-9504.00-00000	Square 8mm, slotted	1 pc.
e)	211-9505.00-00000	Triangular 6.5mm CNOMO	1 pc.
f)	211-9506.00-00000	Triangular 7mm	1 pc.
g)	211-9507.00-00000	Triangular 8mm	1 pc.
h)	211-9508.00-00000	Triangular 9mm EDF	1 pc.
i)	211-9509.00-00000	Double bit 3mm pin	1 pc.
k)	211-9510.00-00000	Double bit 5mm pin	1 pc.
l)	211-9511.00-00000	Socket hex. 6mm	1 pc.
m)	211-9512.00-00000	Socket hex. 10mm	1 pc.
n)	211-9513.00-00000	Daimler Benz type	1 pc.
o)	211-9514.00-00000	Slotted 2x4mm	1 pc.
p)	211-9515.00-00000	Slotted recessed coinproof	1 pc.
q)	211-9516.00-00000	Crown type	1 pc.
r)	211-9517.00-00000	Square socket 6mm	1 pc.
s)	211-9518.00-00000	Square socket 7mm	1 pc.
t)	211-9519.00-00000	Square socket 8mm	1 pc.
u)	211-9520.00-00000	Half-round czech	1 pc.

Accessories
768 6-100 **Wrench**
766 6-101 **Universal key**

all product details ▸ on DIRAK.com

2-141

Profile-Cylinder DIN 18252

[2-140]

RoHS WEEE

Advantages

- **a):** clip-in cam 8x45° adjustable. Key removable in closed position only.
- **b):** spring-loaded clip-in cam. Dust-shutter.
- **c):** cam has 90° stroke, **not** clip-in. Cam length is 12.2mm. Dust-shutter.
- **d)** clip-in cam. Dust-shutter.
- **e):** spring-loaded clip-in cam.
- **f):** cam **not** clip-in, 360° stroke.
- **g):** radial pin tumbler cylinder, clip-in cam.
- **h):** insert triangular 8, the first 4mm of the insert are free rotating. Spring-loaded clip-in cam.
- **i):** Polyamide-plug with and without spring-loaded ball.

Materials

- **a):** brass, nickel plated
- **b), c), e) f) and g):** zinc die, chrome plated
- **conical square e) and f): housing:** zinc die, chrome plated, **insert:** steel, chrome plated
- **i) and d):** PA, black
- **h): housing:** zinc die, chrome plated, **insert:** stainless steel
- **Barrel cylinder:** zinc die
- **Dust-shutter:** stainless steel

Remarks

Versions b), c), d) and g) are supplied with 2, Version a) with 3 keys.

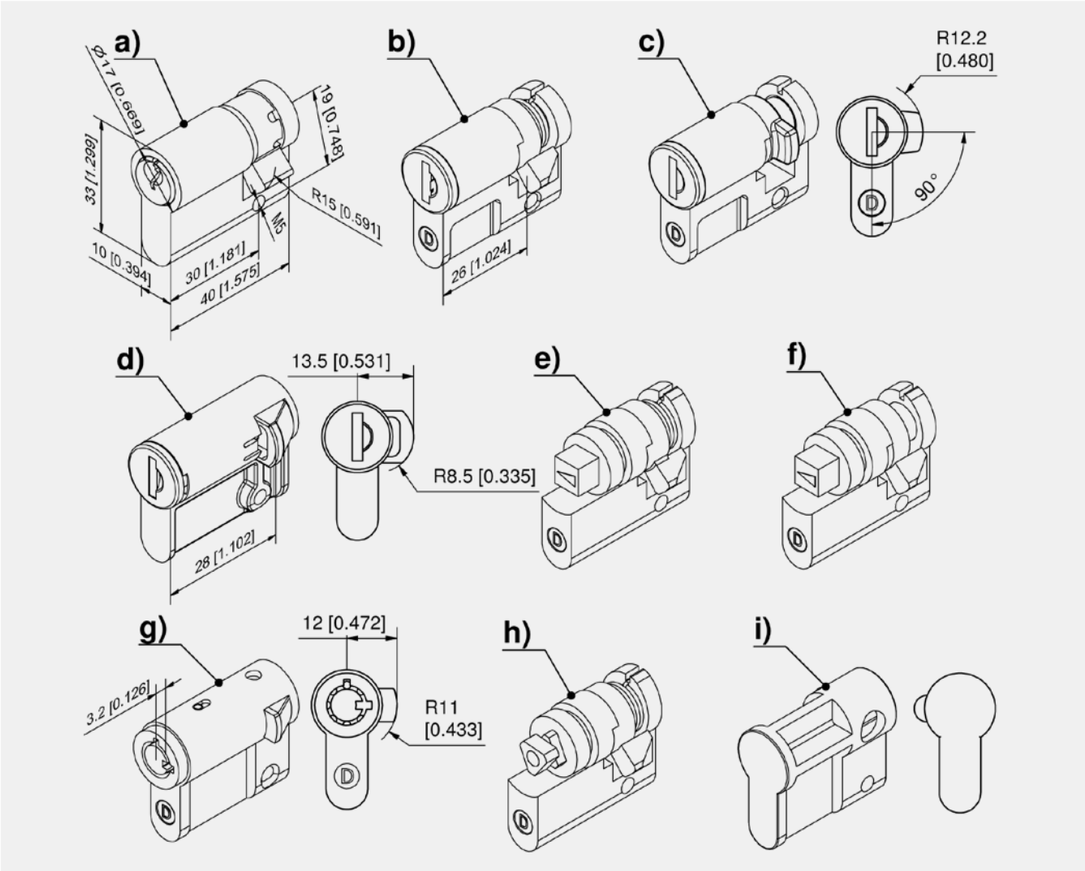

Profile-cylinder with pin tumbler cylinder, DIN 18252, 8 x 45° adjustable

	Part Number	Latching type	Clip-in	Delivery Unit
a)	211-9003.00-00000	keyed alike	No	1 pc.
a)	211-9004.00-00000	keyed different	No	1 pc.

2-140
all product details on DIRAK.com

Profile-cylinder with key cylinder

	Part Number	Latching type	Closing stroke	Clip-in	Delivery Unit
b)	211-9101.00-00000	keyed different		Yes	1 pc.
b)	211-9102.00-00000	keyed alike DIRAK 1333		Yes	1 pc.
b)	511-9102.00-00000	keyed alike DS200		Yes	1 pc.
c)	211-9301.00-00000	keyed different	90°	No	1 pc.
c)	211-9302.00-00000	keyed alike DIRAK 1333	90°	No	1 pc.
c)	511-9302.00-00000	keyed alike DS200	90°	No	1 pc.

Profile-cylinder PA with key cylinder

	Part Number	Latching type	Clip-in	Delivery Unit
d)	211-9113.00-00000	keyed alike DIRAK 1333	Yes	1 pc.
d)	211-9115.00-00000	keyed different (dual entry)	Yes	1 pc.

Profile-cylinder with insert

	Part Number	Insert	Closing stroke	Clip-in	Delivery Unit
e)	211-9202.00-00000	Square 6mm		Yes	1 pc.
e)	211-9203.00-00000	Square 7mm		Yes	1 pc.
e)	211-9204.00-00000	Square 8mm		Yes	1 pc.
e)	211-9205.00-00000	Square 8mm, slotted		Yes	1 pc.
e)	211-9206.00-00000	Triangular 7mm		Yes	1 pc.
e)	211-9207.00-00000	Triangular 8mm		Yes	1 pc.
e)	211-9208.00-00000	Double bit 3mm pin		Yes	1 pc.
e)	211-9209.00-00000	Double bit 5mm pin		Yes	1 pc.
e)	211-9210.00-00000	Triangular 6.5mm CNOMO		Yes	1 pc.
e)	211-9211.00-00000	Socket hex. 10mm		Yes	1 pc.
e)	211-9212.00-00000	Slotted 2x4mm		Yes	1 pc.
e)	211-9213.00-00000	Daimler Benz type		Yes	1 pc.
e)	211-9214.00-00000	Crown type		Yes	1 pc.
e)	211-9215.00-00000	Square socket 6mm		Yes	1 pc.
e)	211-9216.00-00000	Square socket 7mm		Yes	1 pc.
e)	211-9217.00-00000	Square socket 8mm		Yes	1 pc.
e)	211-9218.00-00000	Slotted recessed coinproof		Yes	1 pc.
e)	211-9219.00-00000	Half-round czech		Yes	1 pc.
e)	211-9220.00-00000	Hex. Belcore 7/16"		Yes	1 pc.
e)	211-9235.00-00000	Conical square 9mm		Yes	1 pc.
f)	211-9203.00-00001	Square 7mm	360°	No	1 pc.
f)	211-9204.00-00001	Square 8mm	360°	No	1 pc.
f)	211-9206.00-00001	Triangular 7mm	360°	No	1 pc.
f)	211-9207.00-00001	Triangular 8mm	360°	No	1 pc.
f)	211-9208.00-00001	Double bit 3mm pin	360°	No	1 pc.
f)	211-9209.00-00001	Double bit 5mm pin	360°	No	1 pc.
f)	211-9212.00-00001	Slotted 2x4mm	360°	No	1 pc.
f)	211-8057.00-00000	Conical square 9mm	360°	No	1 pc.

Profile-cylinder with radial pin tumbler cylinder

	Part Number	Locking	Latching type	Clip-in	Delivery Unit
g)	211-9106.00-00000	Push button	keyed different	Yes	1 pc.
g)	211-9107.00-00000	Push button	keyed alike DIRAK D0205	Yes	1 pc.

Profile-cylinder with security insert

	Part Number	Insert	Clip-in	Delivery Unit
h)	211-9244.00-00000	Security insert with free rotating 8mm triangular front part	Yes	1 pc.

Profile-cylinder with blind plug

	Part Number	Name	Clip-in	Delivery Unit
i)	211-0401.03-00000	Blind plug without spring-loaded ball	No	1 pc.
i)	211-9201.00-00000	Blind plug with spring-loaded ball	Yes	1 pc.

	Accessories
768	6-100 **Wrench**
770	6-105 **Keys for the Railway Sector**

Profile-Cylinder Stainless Steel

[7-069]

Advantages

- Profile-cylinder with insert for swinghandles see product system 7-060 and 7-066.
- 40mm length
- Spring loaded clip-in cam.

Materials

- **Housing, cam and insert:** AISI 316

Remarks

i) security insert with free rotating 8mm triangular front part. The free rotating front part increases the security because the insert can only be opened with the suitable triangular key.

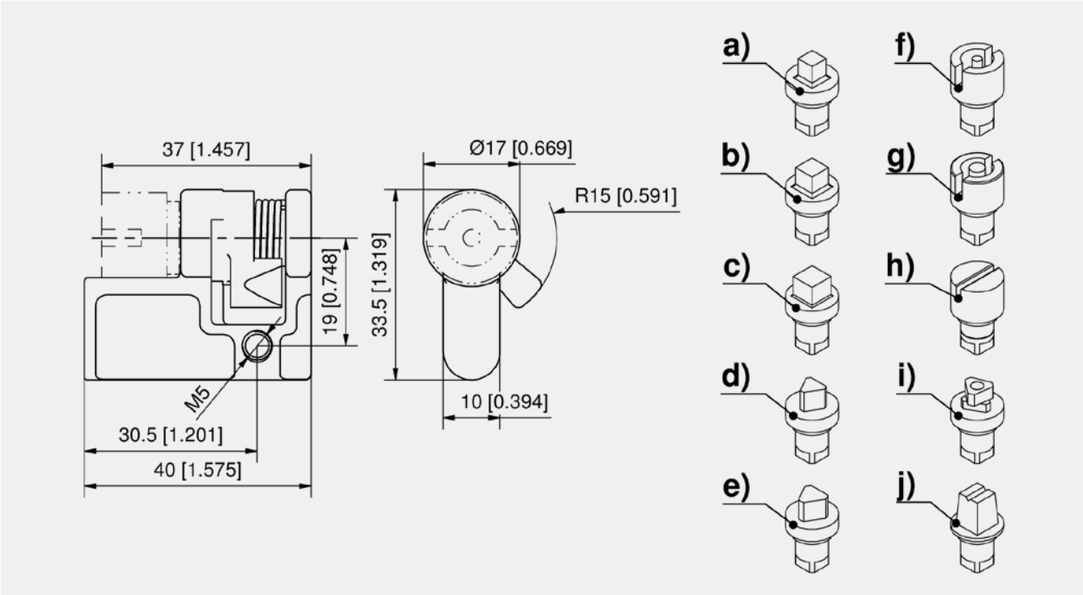

Profile-cylinder with insert

	Part Number	Insert	Delivery Unit
a)	211-9226.00-00000	Square 6mm	1 pc.
b)	211-9227.00-00000	Square 7mm	1 pc.
c)	211-9228.00-00000	Square 8mm	1 pc.
d)	211-9229.00-00000	Triangular 7mm	1 pc.
e)	211-9230.00-00000	Triangular 8mm	1 pc.
f)	211-9231.00-00000	Double bit 3mm pin	1 pc.
g)	211-9232.00-00000	Double bit 5mm pin	1 pc.
h)	211-9233.00-00000	Slotted 2x4mm	1 pc.
i)	211-9242.00-00000	Security insert with free rotating 8mm triangular front part	1 pc.
j)	211-9238.00-00000	Conical square 9mm	1 pc.

Accessories
768 6-100 **Wrench**
770 6-105 **Keys for the Railway Sector**

7-069
◂ all product details on DIRAK.com

Rod Latch RS

[2-340.01]

Advantages

- Rod latch with 24mm stroke.
- For bending A=25mm.
- For door-thicknesses from 16 to 22mm.
- RH and LH version.
- 90° Opening angle.
- Rod connection M8 or M10.

Materials

- **Rod latch:** steel, zinc plated

Remarks

For swinghandle 130mm see 2-340.

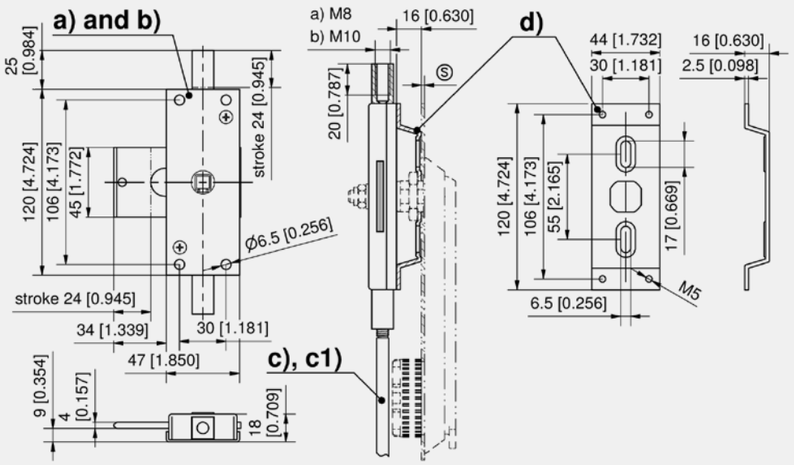

Rod latch with rod connection threaded M8

	Part Number	Version	Installation type	Delivery Unit
a)	238-9003.00-00000	RH	screw-on	1 pc.
a)	238-9004.00-00000	LH	screw-on	1 pc.

Rod latch with rod connection threaded M10

	Part Number	Version	Installation type	Delivery Unit
b)	238-9001.00-00000	RH	screw-on	1 pc.
b)	238-9002.00-00000	LH	screw-on	1 pc.

Round rods with thread

	Part Number	Name	Delivery Unit
c)	201-0801.00-01000	Round rod, M8 x 1000mm	1 pc.
c1)	201-1001.00-01000	Round rod, M10 x 1000mm	1 pc.

Lock support

	Part Number	Type	Material	Surface	Delivery Unit
d)	238-1501.00-00000	Lock support RH/LH, 16mm high	steel	zinc plated	1 pc.

all product details ▸ on DIRAK.com
2-340.01

Rod Latch for Internal Release

[2-400.01]

Advantages

- Rod latch for unlocking when swinghandle is closed.
- Door-thicknesses from 20 to 106mm.
- RH and LH version.
- 90° Opening angle.
- Rod connection threaded M8 or M10.

Materials

- **Rod latch:** zinc die / steel, zinc plated

Remarks

1. stroke 20mm
2. cam-stroke 22mm
3. fasting of the dish by counter-sunk screws (custom made)

For swinghandle 130mm see 2-400.

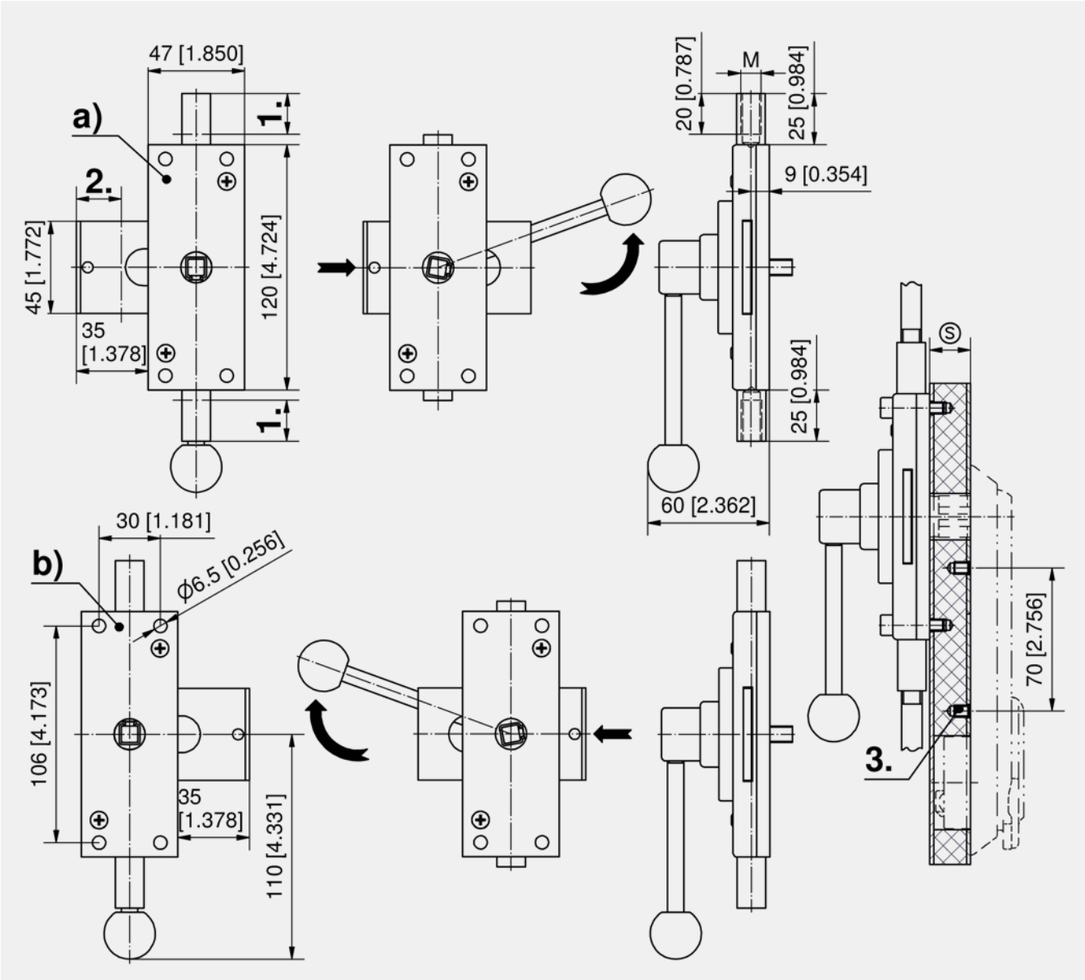

Rod latch with rod connection threaded M10, version RH

	Part Number	Door-thickness (S)	Installation type	Delivery Unit
a)	238-9101.00-00000	20 - 26 mm	screw-on	1 pc.
a)	238-9103.00-00000	27 - 33 mm	screw-on	1 pc.
a)	238-9105.00-00000	34 - 40 mm	screw-on	1 pc.
a)	238-9107.00-00000	70 - 76 mm	screw-on	1 pc.
a)	238-9109.00-00000	100 - 106 mm	screw-on	1 pc.

Rod latch with rod connection threaded M10, Version LH

	Part Number	Door-thickness (S)	Installation type	Delivery Unit
b)	238-9102.00-00000	20 - 26 mm	screw-on	1 pc.
b)	238-9104.00-00000	27 - 33 mm	screw-on	1 pc.
b)	238-9106.00-00000	34 - 40 mm	screw-on	1 pc.
b)	238-9108.00-00000	70 - 76 mm	screw-on	1 pc.
b)	238-9110.00-00000	100 - 106 mm	screw-on	1 pc.

Rod latch with rod connection threaded M8, Version RH

	Part Number	Door-thickness (S)	Installation type	Delivery Unit
a)	238-9301.00-00000	20 - 26 mm	screw-on	1 pc.
a)	238-9303.00-00000	27 - 33 mm	screw-on	1 pc.
a)	238-9305.00-00000	34 - 40 mm	screw-on	1 pc.
a)	238-9307.00-00000	70 - 76 mm	screw-on	1 pc.
a)	238-9309.00-00000	100 - 106 mm	screw-on	1 pc.

Rod latch with rod connection threaded M8, Version LH

	Part Number	Door-thickness (S)	Installation type	Delivery Unit
b)	238-9302.00-00000	20 - 26 mm	screw-on	1 pc.
b)	238-9304.00-00000	27 - 33 mm	screw-on	1 pc.
b)	238-9306.00-00000	34 - 40 mm	screw-on	1 pc.
b)	238-9308.00-00000	70 - 76 mm	screw-on	1 pc.
b)	238-9310.00-00000	100 - 106 mm	screw-on	1 pc.

	Specific accessories
272	2-400 **Swinghandle for Rod Latch 2-400.01**
307	201-0801.00-01000 **Round rod, M8 x 1000mm**
307	201-1001.00-01000 **Round rod, M10 x 1000mm**

2-400.01

all product details on DIRAK.com

Multi-Point Systems

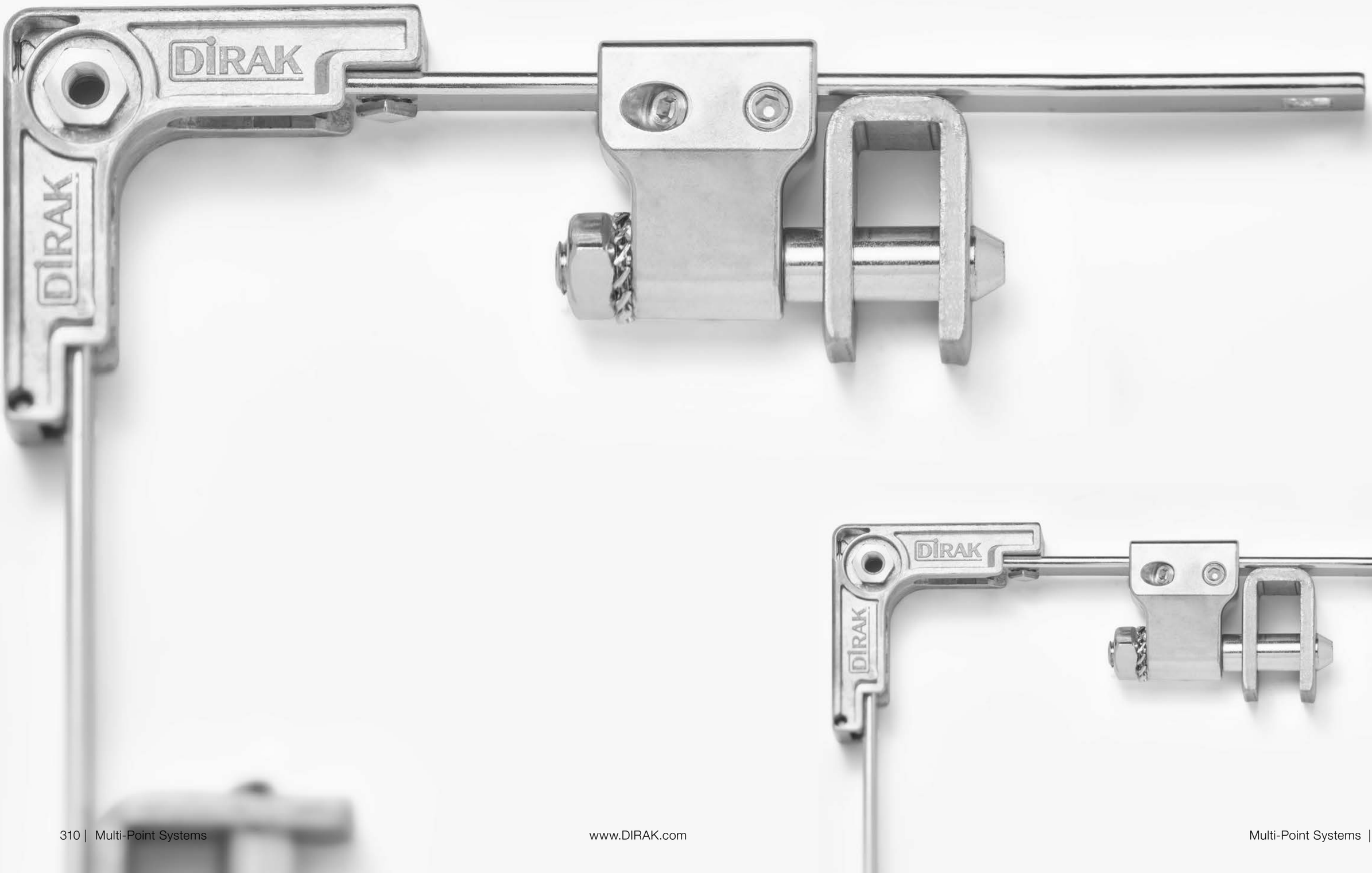

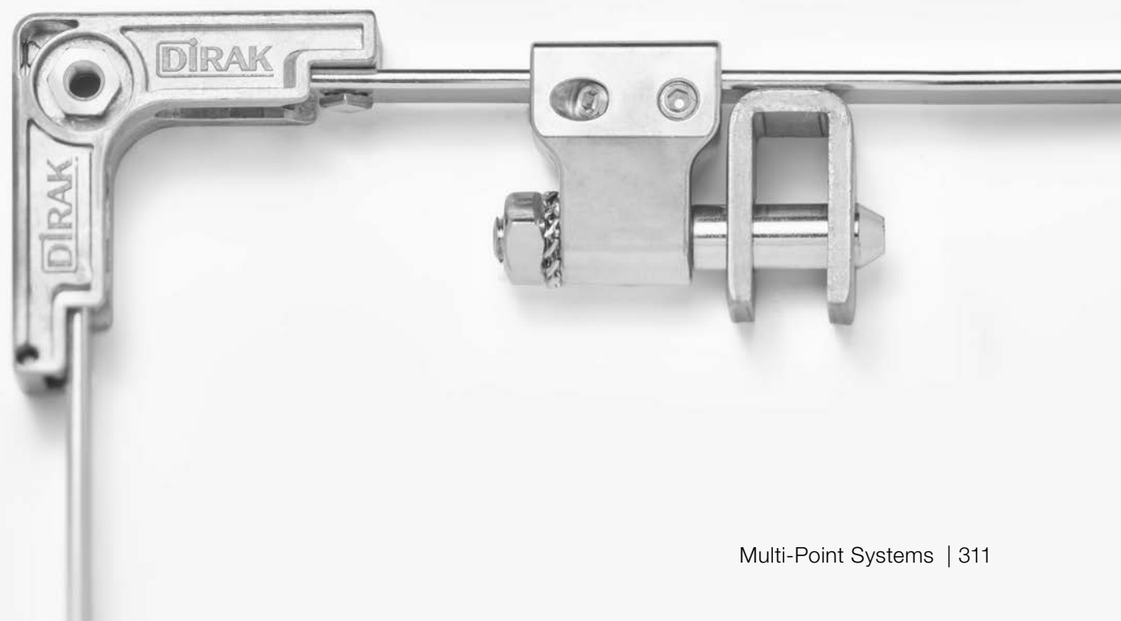

SECURE LOCKING UNDER HIGH PRESSURE.

Passing trains, high-pressure cleaners and vandalism – switch cabinets as well as industrial housings are often exposed to extreme conditions. This also poses challenges to latching technology. With a multi-point system including 90° redirection, doors close tightly and can be opened and closed with no problem, even under high pressure.

Perfect hold.

The Rod Guide 3-911 provides a stable hold for flat rods and can be installed without tools by sliding it over the welding stud and then pushing it onto the thread until it engages in the end position with a clearly audible “crack" sound.

Page 379

Page 372 / 198

A strong team.

The 90° corner redirection in combination with the pressure-resistant fitting is the perfect solution for securing housing doors variably and reliably.

Due to the reduced design and use of flat rods, assembly is even possible on the outer edge of the door. That makes it possible to lock even large and heavy housing doors reliably and uniformly.

Page 372 / 192

CORNER REDIRECTION.

Convenient and reliable latching around a corner allows for consistent sealing pressure. With the 90° redirection, any number of latching points can be locked vertically and horizontally in just one closing process.

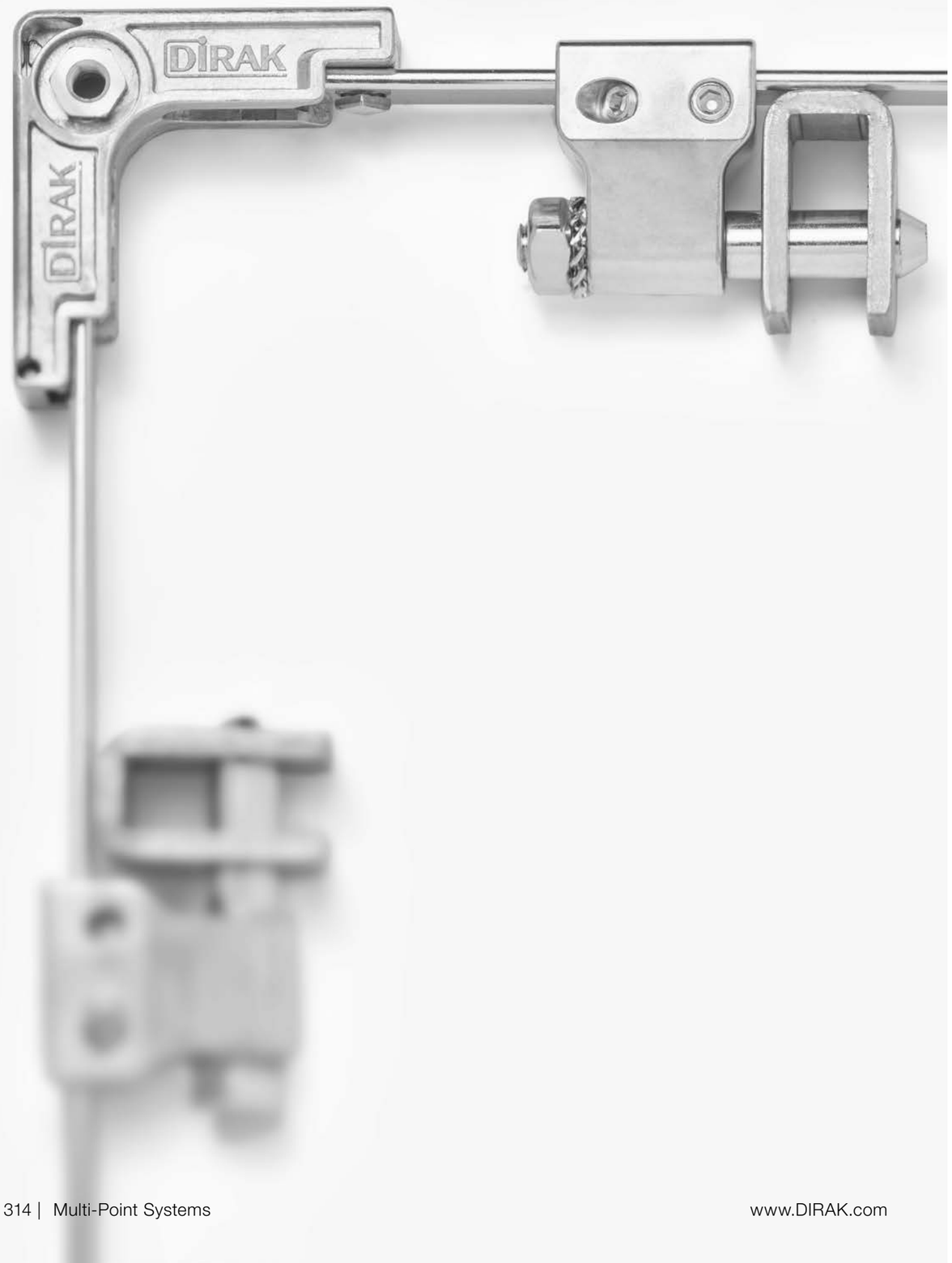

Multi-Point Systems by Cutout

50

Page: **318–326**

Insert 318–320, 322–323
Cylinder barrel 324–326
Padlock 320

50
25
50

Page: **321, 328–329**

Insert 328–329
Cylinder barrel 328–329
Padlock 328–329

50
50
50

Page: **318–319, 321–323, 330–345**

Insert 318–319, 322–323, 333, 339
Cylinder barrel . . . . . 330 -333, 336–338
Profile cylinder 333–335, 342–345
Padlock 334–335, 340, 344
Combination lock 338
KABA cylinder 341

Further Cutouts

Page: **347–351**

Profile cylinder 347–351
Padlock 350–351
KABA cylinder 350–351
Vandalism-proof 350–351

Multi-Point Systems

Overview

318 Escutcheons and Inserts [3-101]

320 Escutcheon for Rod Latch PrA [3-135]

321 Cutout-Cover PrA / PrB / PrC [3-136]

322 Lock Cover and Inserts PrA / PrC Stainless Steel [7-034]

324 Handles for Rod Latch FS PrA [3-110]

325 T- and L-Handle Stainless Steel [7-035]

326 T-Handle SOFTLINE for Rod Latch FS PrA [3-112]

328 Swinghandle FS PrB [3-070]

330 Handles for Rod Latch FS PrC [3-140]

332 Swinghandle FS PrC [3-149]

333 Swinghandle SOFT-LINE FS PrC [3-155.02]

334 Swinghandle FS PrC for PHZ [3-150]

336 Swinghandle FS PrC with Key Cylinder [3-150.01]

338 Swinghandle FS PrC with Combination Lock [3-150.02]

339 Swinghandle FS PrC for Insert [3-150.03]

340 Swinghandle FS PrC clip-in [3-150.04]

341 Swinghandle FS PrC for KABA-/ Assa-Cyl-inder [3-150.05]

342 DST Swinghandle FS PrC for PHZ [3-150DST]

344 Swinghandle FS PrC Stainless Steel for PHZ [7-060]

345 NT Swinghandle FS PrC Stainless Steel for PHZ [7-061]

347 Swinghandle FS OFFSET-DUO-3 for PHZ [3-310]

348 Rods and Accesso-ries FS OFF-SET-DUO-3 [3-311]

350 Eject and Turn T-Handle FS/RS [3-145]

352 Rod Latch RS/FS PrA [3-100]

354 Rod Latch RS/FS PrA Stainless Steel [7-030]

356 Rod Latch FS PrB [3-075]

358 Rod Latch RS PrB [3-132.01]

360 Rod Latch FS PrC [3-130]

362 Rod Latch FS PrC Stainless Steel [7-040]

364 Rod Latch RS PrC [3-132.02]

366 Grounding Clip Stainless Steel [3-011]

367 Flat Rod FS with Rollers [3-160]

368 Flat Rod FS [3-161]

369 Flat Rods FS Stain-less Steel [7-070]

370 Ramp-Shoe for Flat Rod [3-162]

371 Rod Latch FS PrC and Angle Pieces with Rollers [3-165]

372 90° Redirect FS [3-166]

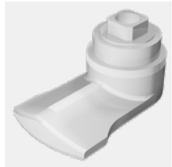
374 Cam for Rod Latch [3-163.01]

375 Cam Adapter Zinc Die [3-163]

376 Cam Adapter Stain-less Steel [7-041]

377 Adapter Set for Swinghandle [3-152]

378 Rod Guide FS 23mm [3-910]

379 Rod Guide FS 23mm [3-911]

380 Rod Latch for Multi-Point Locking FS PrC [3-170]

382 Flat Rod FS with Dual Rollers, variable [3-171]

383 DST Flat Rods FS variable [3-171DST]

384 Dual Hook FS 23mm [3-912]

385 Dual Hook FS Stain-less Steel 23mm [7-910]

386 DST Dual Hook FS [3-910DST]

387 Profile-Cylinder Stainless Steel [7-069]

388 Profile-Cylinder DIN 18252 [2-140]

Escutcheons and Inserts

A

C

IP 65

RoHS WEEE

Advantages

- Compatible with rod latches for cutout A and C.
- **Cutout PrA:** IP65 according to DIN EN 60529 with o-rings d) and e).
- **Cutout PrC, for use outside the seal:** version b), b1) and c) with hook for easy installation.
- Variant a1) and b1) is in accordance with DIN 43668: the double-bit key can only be removed in locked position.
- Grounding by grounding clip (optional).
- Recessed label field 8 x 20.
- Escutcheons and rod latch affix together in the cutout.
- Mounting screws are part of the delivery.

Materials

- **Escutcheons:** PA, black
- **Inserts:** zinc die, chrome plated

Remarks

Door-thickness 2.0 - 2.5mm

Version a1) and b1) only for insert double bit h).

Version c) only for insert FIAT k).

1. insert
2. locking disc
3. serrated screw

O-ring for escutcheon **PrA** please order **1** pc.

Two-part lock cover see 3-135 and 3-136.

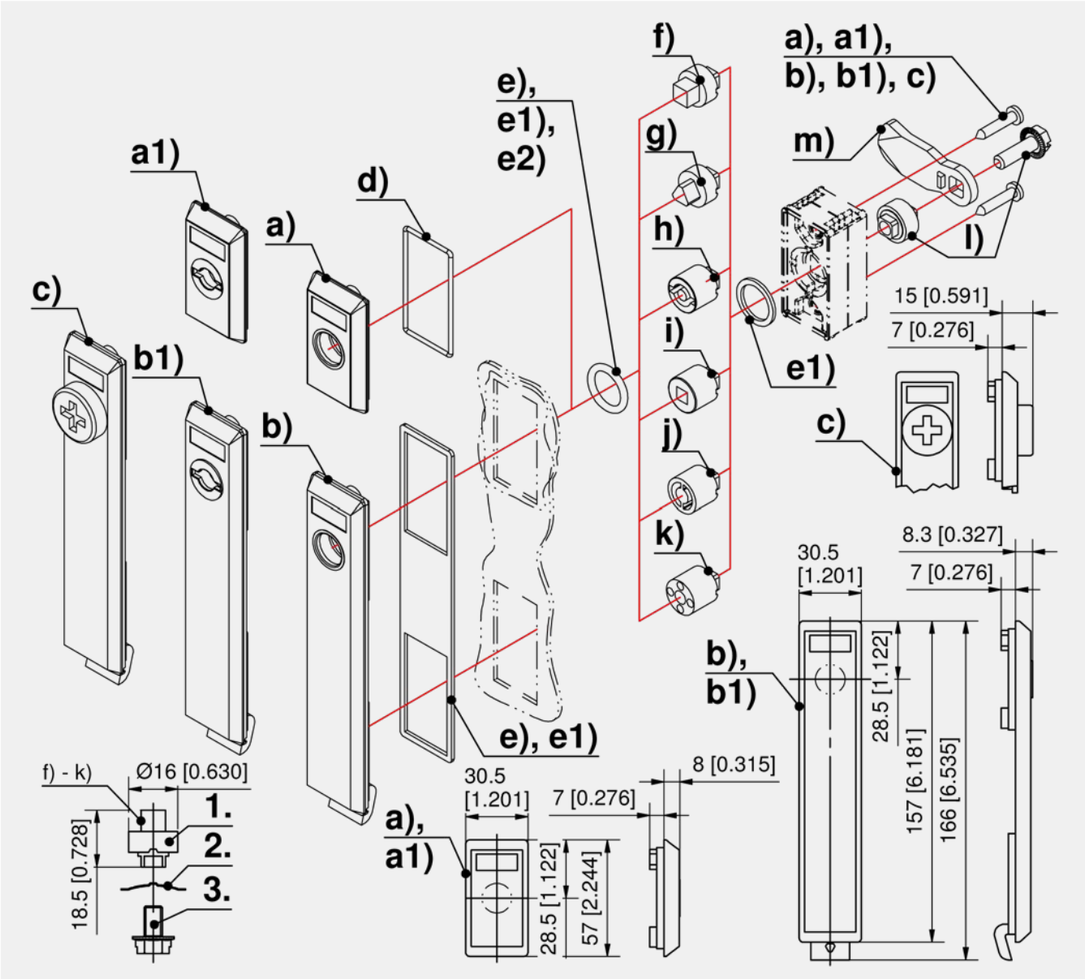

3-101

all product details on DIRAK.com

Escutcheons

	Part Number	Name	Cutout	Installation type	Delivery Unit
a)	208-9301.00-00000	Escutcheon for triangular, square and Daimler Benz	PrA	screwed	1 pc.
a1)	208-9302.00-00000	Escutcheon for Double bit	PrA	screwed	1 pc.
b)	208-9501.00-00000	Escutcheon for triangular, square and Daimler Benz	PrC	screwed with hook	1 pc.
b1)	208-9502.00-00000	Escutcheon for Double bit	PrC	screwed with hook	1 pc.
c)	208-9503.00-00000	Escutcheon, FIAT Type	PrC	screwed with hook	1 pc.

Inserts

	Part Number	Insert	Delivery Unit
f)	208-9201.00-00000	Square 6mm	1 pc.
f1)	208-9202.00-00000	Square 7mm	1 pc.
f2)	208-9203.00-00000	Square 8mm	1 pc.
g)	208-9204.00-00000	Triangular 7mm	1 pc.
g1)	208-9205.00-00000	Triangular 8mm	1 pc.
g2)	208-9217.00-00000	Triangular 6.5mm CNOMO	1 pc.
h)	208-9210.00-00000	Double bit 3mm pin	1 pc.
h1)	208-9207.00-00000	Double bit 5mm pin	1 pc.
h2)	208-9206.00-00000	Double bit 3mm with stainless steel core	1 pc.
i)	208-9212.00-00000	Square socket 6mm	1 pc.
j)	208-9208.00-00000	Daimler Benz type	1 pc.
k)	208-9209.00-00000	FIAT type	1 pc.

+	Accessories
to a)	352 3-100 **Rod Latch RS/FS PrA**
to b) + c)	360 3-130 **Rod Latch FS PrC**
to b) + c)	380 3-170 **Rod Latch for Multi-Point Locking FS PrC**
d)	208-1802.00-00000 **O-ring 39.45 x 1.78mm**
e)	208-1801.00-00000 **O-ring 16 x 3.0mm**
e1)	209-9008.00-00000 **Sealing kit IP65 for door-thickness 2mm (2-parts)**
e2)	209-9009.00-00000 **Sealing kit IP65 for2.5mm door-thickness (3-parts)**
l)	375 3-163 **Cam Adapter Zinc Die**
m)	154, 292 1-102 **Cams L35/45 Steel**
	302, 366 3-011 **Grounding Clip Stainless Steel**
	768 6-100 **Wrench**

Multi-Point Systems

Escutcheon for Rod Latch PrA

[3-135]

A

IP 54

IP 65

RoHS WEEE

Advantages

- Compatible with the rod latch system for cutout A, B and C.
- By using the extension pieces the escutcheon PrA can also be used for cutouts PrB and PrC.
- Polyamide - insert version, zinc die cast - insert and padlock version.
- IP65 according to DIN EN 60529 (in combination with extensions IP54).
- Grounding by grounding clip (optional).
- The escutcheon is secured into the cutout with the rod latch.

Materials

a)

- **Escutcheon:** PA, black

b)

- **Escutcheon for padlock:** zinc die, black

Remarks

Door-thickness 1.5 - 2.5mm

b) Maximum diameter of the shackle - Ø10 mm.

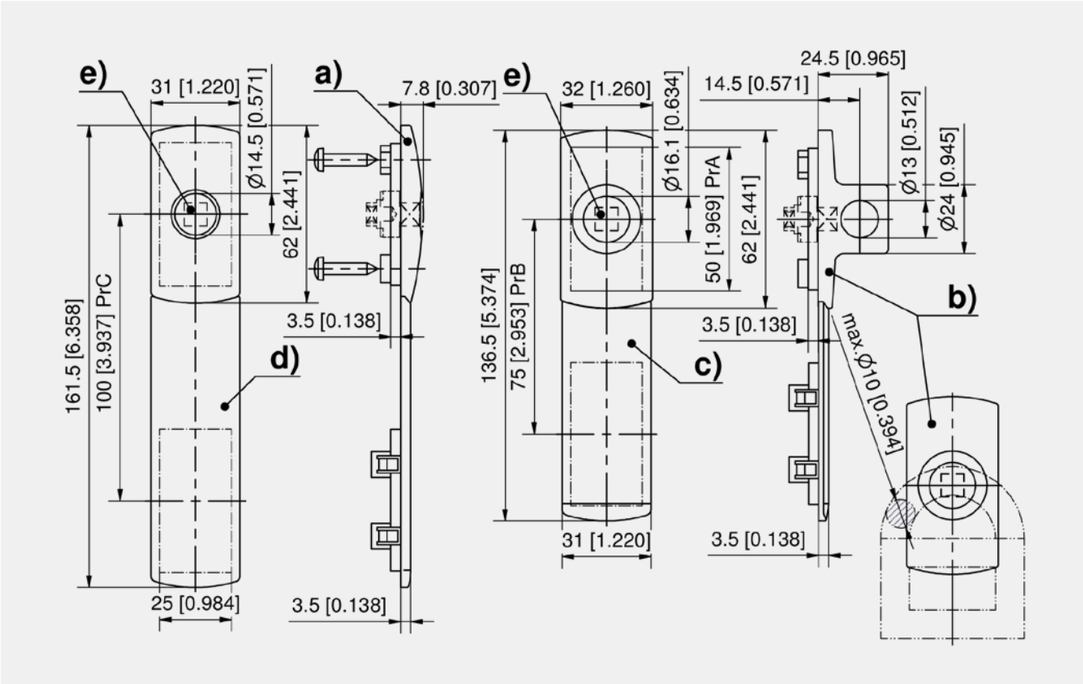

Escutcheon

	Part Number	Name	Material	Fastening type	Delivery Unit
a)	208-9305.00-00000	Escutcheon	PA	screw-on	1 pc.
b)	208-9312.00-00000	Escutcheon for padlock	zinc die	screw-on	1 pc.

	Accessories
c)	321 208-0523.03-00000 **Extension for cutout B**
d)	321 208-0522.03-00000 **Extension for cutout C**
e)	318 3-101 **Escutcheons and Inserts**
	209-4003.00-00000 **O-Ring**
	352 3-100 **Rod Latch RS/FS PrA**
	302, 366 3-011 **Grounding Clip Stainless Steel**

3-135

◂ all product details on DIRAK.com

Cutout-Cover PrA / PrB / PrC

[3-136]

Advantages

- Tool-less installation.
- Cutout-cover c) PrA for doors / double doors with same cutout.
- Extensions a) and b) for cutout PrB and PrC.
- For sheet thicknesses from 1.5 to 3mm.
- IP54 according to DIN EN 60529 (optional).

Materials

- **Cutout-cover and escutcheon:** PA, black

Remarks

Door-thickness 1.5 - 2.5mm

1. o-ring

2. e.g.:
1-100DST
1-099
3-135

3. example of application for double doors with equal cutouts

A

B

C

IP 54

RoHS WEEE

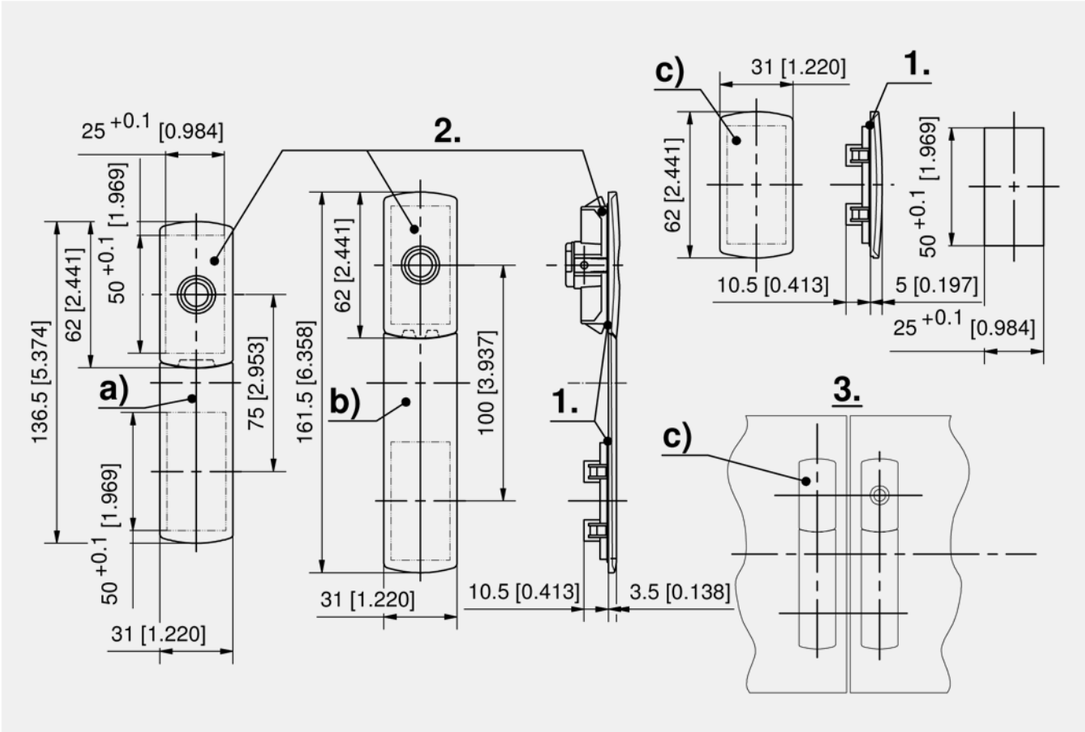

Cutout-cover

	Part Number	Name	Installation type	Delivery Unit
a)	208-0523.03-00000	Extension for cutout B	tool-less	1 pc.
b)	208-0522.03-00000	Extension for cutout C	tool-less	1 pc.
c)	208-0526.52-00000	Cover for cutout A	tool-less	1 pc.

Accessories
208-1804.00-00000 **O-ring 40 x 2.0mm**

all product details ▸ on DIRAK.com

3-136

Lock Cover and Inserts PrA / PrC Stainless Steel [7-034]

A
C
IP 65
RoHS WEEE

Advantages

- a) lock cover compatible with rod latch cutout A.
- a1) lock cover compatible with rod latch cutout C.
- Lock covers are fixed into the cutout together with the rod latch.
- Version for cutout C is secured in both upper and lower cutout (mounting screws are part of the delivery).
- IP65 according to DIN EN 60529 with sealing kit for cutout A or C (optional).

Materials

- **Escutcheons:** AISI 316
- **Inserts:** AISI 316 or AISI 303

Remarks

O-ring for lock cover **PrA** please order **1 pc.**

O-ring for lock cover **PrC** please order **2 pcs.**

Door-thickness 1.5 - 2.5mm

Actuation of the rod latch with inserts d) – d4).

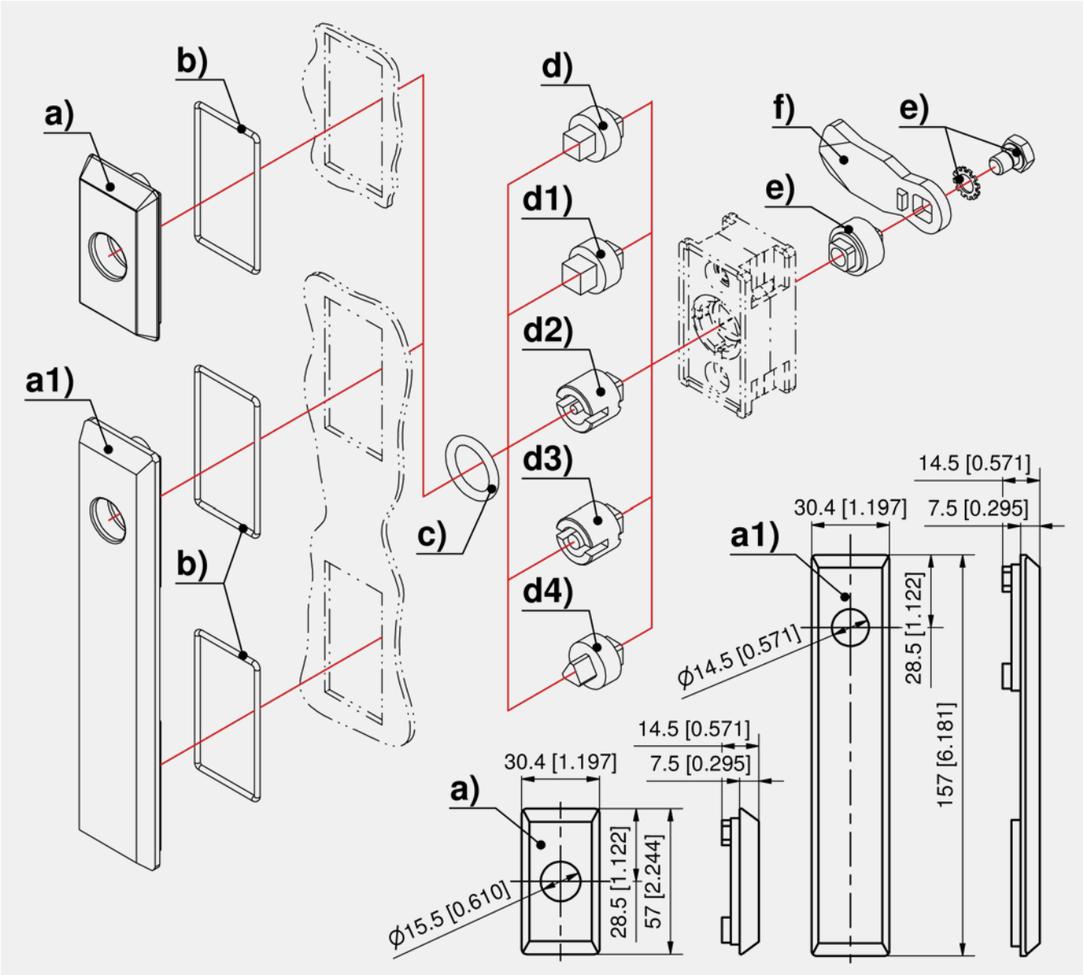

7-034

all product details on DIRAK.com

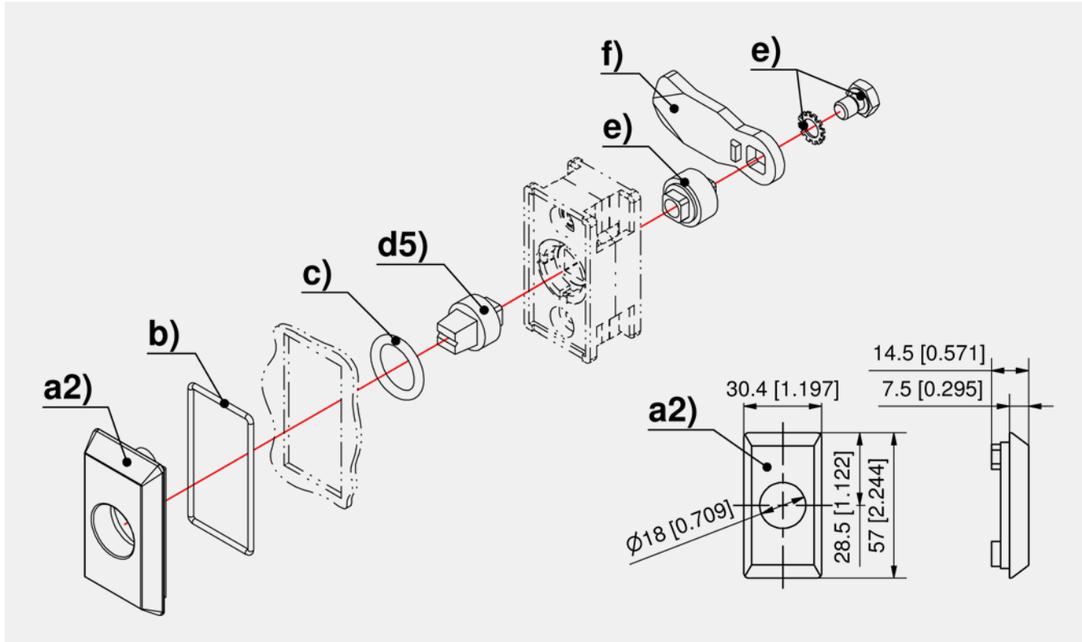

Escutcheons

	Part Number	Version	Cutout	Installation type	Delivery Unit
a)	208-9304.00-00000		PrA	screwed	1 pc.
a1)	208-9504.00-00000		PrC	screwed	1 pc.
a2)	208-9310.00-00000	for conical square insert 9mm	PrA	screwed	1 pc.

Inserts

	Part Number	Insert	Material	Delivery Unit
d)	208-9218.00-00000	Square 7mm	AISI 303	1 pc.
d1)	208-9219.00-00000	Square 8mm	AISI 303	1 pc.
d2)	208-9220.00-00000	Double bit 3mm pin	AISI 316	1 pc.
d3)	208-9221.00-00000	Double bit 5mm pin	AISI 316	1 pc.
d4)	208-9222.00-00000	Triangular 7mm	AISI 303	1 pc.
d5)	208-9223.00-00000	Conical square 9mm	AISI 316	1 pc.

	Accessories
to a)	354 7-030 **Rod Latch RS/FS PrA Stainless Steel**
to a1)	362 7-040 **Rod Latch FS PrC Stainless Steel**
b)	208-1802.00-00000 **O-ring 39.45 x 1.78mm**
c)	208-1801.00-00000 **O-ring 16 x 3.0mm**
e)	376 208-9406.00-00000 **Cam adapter with hex. head screw M6x25 + serrated lock washer**
f)	156 7-105 **Cams L35/45 Stainless Steel**
	302, 366 3-011 **Grounding Clip Stainless Steel**
	768 6-100 **Wrench**
	770 6-105 **Keys for the Railway Sector**

Handles for Rod Latch FS PrA

[3-110]

Advantages

- T- and L-handles and wing knob for use with rod latch product system 3-100.
- Handles without cylinder IP65 according to DIN EN 60529 by o-ring.
- Grounding by grounding clip (optional).
- Key cylinders are supplied with 2 keys.
- Mounting screws are included.

Materials

- **Wing knob, T-handle and L-handle:** PA, black / zinc die, untreated

Remarks

Door-thickness 1.5 - 2.5mm

1. recess for lable 20 x 8mm

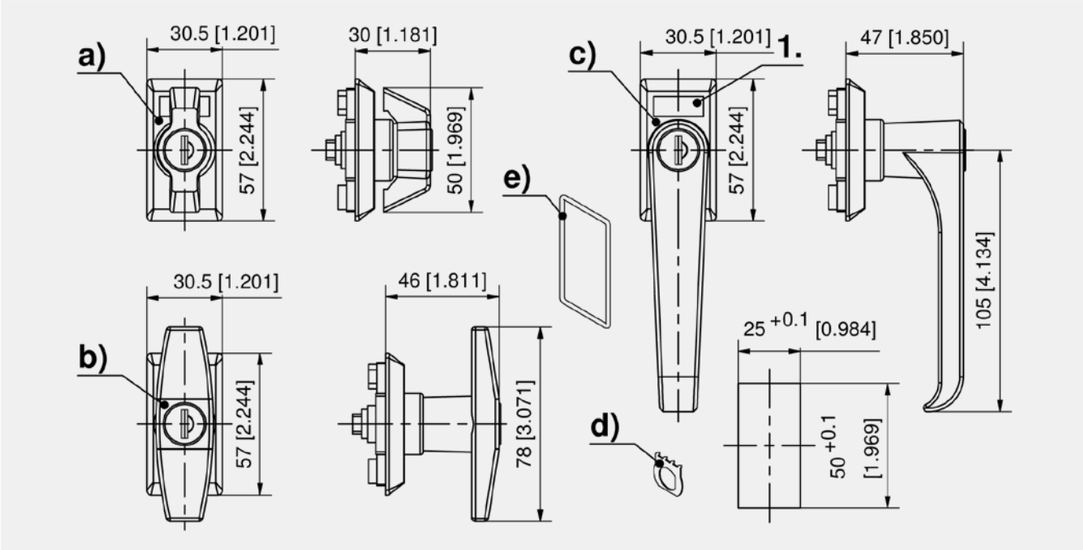

Handles for rod latch

	Part Number	Name	Latching type	IP protection	Installation type	Delivery Unit
a)	208-9601.00-00000	Wing knob		IP65	screw-on	1 pc.
a)	208-9602.00-00000	Wing knob	keyed alike DIRAK 1333		screw-on	1 pc.
a)	508-9602.00-00000	Wing knob	keyed alike DS200		screw-on	1 pc.
a)	208-9603.00-00000	Wing knob	keyed different		screw-on	1 pc.
b)	208-9604.00-00000	T-handle		IP65	screw-on	1 pc.
b)	208-9605.00-00000	T-handle	keyed alike DIRAK 1333		screw-on	1 pc.
b)	508-9605.00-00000	T-handle	keyed alike DS200		screw-on	1 pc.
b)	208-9606.00-00000	T-handle	keyed different		screw-on	1 pc.
c)	208-9607.00-00000	L-handle		IP65	screw-on	1 pc.
c)	208-9608.00-00000	L-handle	keyed alike DIRAK 1333		screw-on	1 pc.
c)	508-9608.00-00000	L-handle	keyed alike DS200		screw-on	1 pc.
c)	208-9609.00-00000	L-handle	keyed different		screw-on	1 pc.

	Accessories
d)	302, 366 3-011 **Grounding Clip Stainless Steel**
e)	208-1802.00-00000 **O-ring 39.45 x 1.78mm**
	352 3-100 **Rod Latch RS/FS PrA**

3-110
◂ all product details on DIRAK.com

T- and L-Handle Stainless Steel

[7-035]

Advantages

- T- and L-handles for use with rod latch product system 7-030.
- For flat rods.
- For cutout A.
- IP65 according to DIN EN 60529 (optional).
- Grounding by grounding clip (optional).
- Key cylinders are supplied with two keys.
- Mounting screws are included.

Materials

- **Handles and escutcheon:** AISI 316
- **Cylinder barrel and screws:** stainless steel

Remarks

(S) Door-thickness 1.5 - 2.5mm

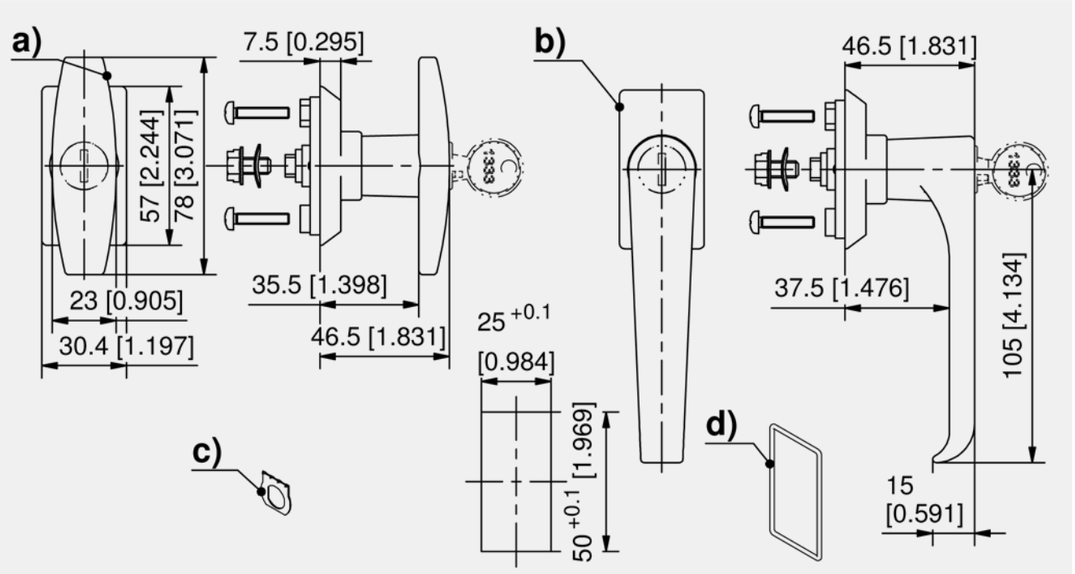

Handle with escutcheon

	Part Number	Type	Latching type	Installation type	Delivery Unit
a)	208-9634.00-00000	T-handle		screw-on	1 pc.
a)	208-9650.00-00000	T-handle	keyed alike DIRAK 1333	screw-on	1 pc.
a)	208-9651.00-00000	T-handle	keyed different	screw-on	1 pc.
b)	208-9635.00-00000	L-handle		screw-on	1 pc.
b)	208-9652.00-00000	L-handle	keyed alike DIRAK 1333	screw-on	1 pc.
b)	208-9653.00-00000	L-handle	keyed different	screw-on	1 pc.

	Accessories
c)	302, 366 3-011 **Grounding Clip Stainless Steel**
d)	208-1802.00-00000 **O-ring 39.45 x 1.78mm**
	354 7-030 **Rod Latch RS/FS PrA Stainless Steel**

all product details ▸ on DIRAK.com
7-035

T-Handle SOFTLINE for Rod Latch FS PrA

[3-112]

A

IP 65

RoHS WEEE

Advantages

- T-handles for use with rod latch product system 3-100.
- For flat rods.
- For cutout A.
- Version **without** lock IP65 according to DIN EN 60529 (optional).
- Grounding by grounding nut (optional).
- Key cylinders are supplied with 2 keys.

Materials

- **T-handle:** zinc die, matt nickel plated

Remarks

For door-thickness 1.5 - 2.5mm DIRAK recommends to use screws M4 x 20mm.

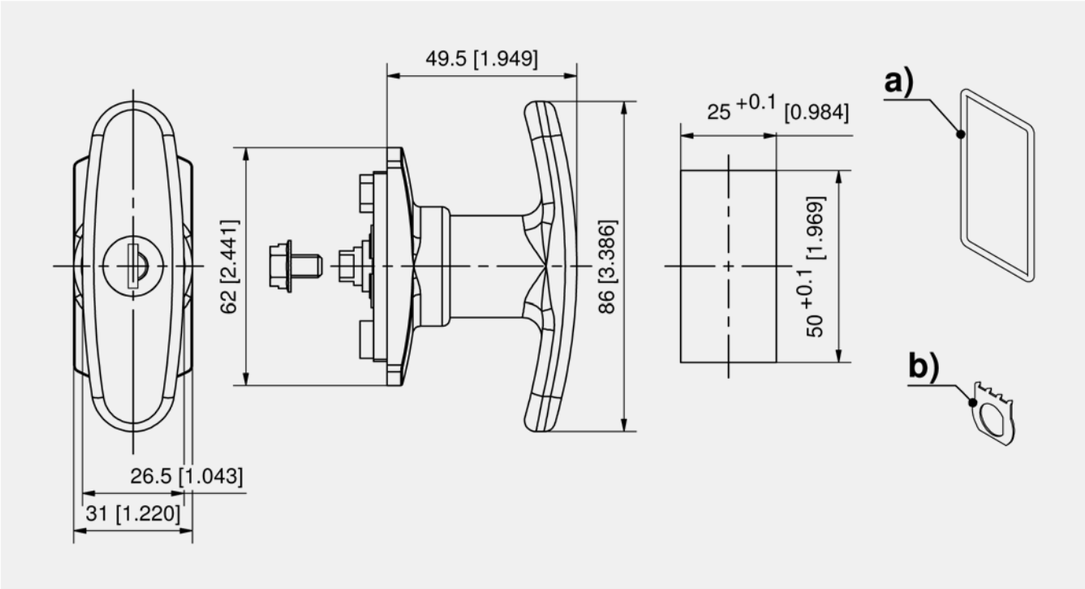

T-handle for rod latch

Part Number	Latching type	Installation type	Delivery Unit
208-9648.00-00000	without lock	screw-on	1 pc.
208-9654.00-00000	keyed alike DIRAK 1333	screw-on	1 pc.
208-9655.00-00000	keyed different	screw-on	1 pc.

+	Accessories
a)	208-1802.00-00000 **O-ring 39.45 x 1.78mm**
b)	302, 366 3-011 **Grounding Clip Stainless Steel**
	352 3-100 **Rod Latch RS/FS PrA**

3-112

all product details on DIRAK.com

90° Redirect FS

See page 372 / 198

Swinghandle FS PrB

[3-070]

B

R L

IP 65

RoHS WEEE

Advantages

- Swinghandle TRIMLINE for rod latch and flat rods.
- Locking stub included in handle-assembly.
- IP65 according to DIN EN 60529.
- RH / LH application.
- Grounding by grounding clip (optional).
- Key cylinders are supplied with 2 keys.

Materials

- **Swinghandle:** zinc die, chrome plated or black
- **Dish:** zinc die, chrome plated or black or PA, black
- **Padlock eye:** stainless steel
- **Cap:** PA, black
- **O-ring:** NBR

Remarks

(S) Door-thickness 1.5 - 2.5mm

For Version for 3-point cam see product system 2-070.

Locking inserts must be ordered separately, see c).

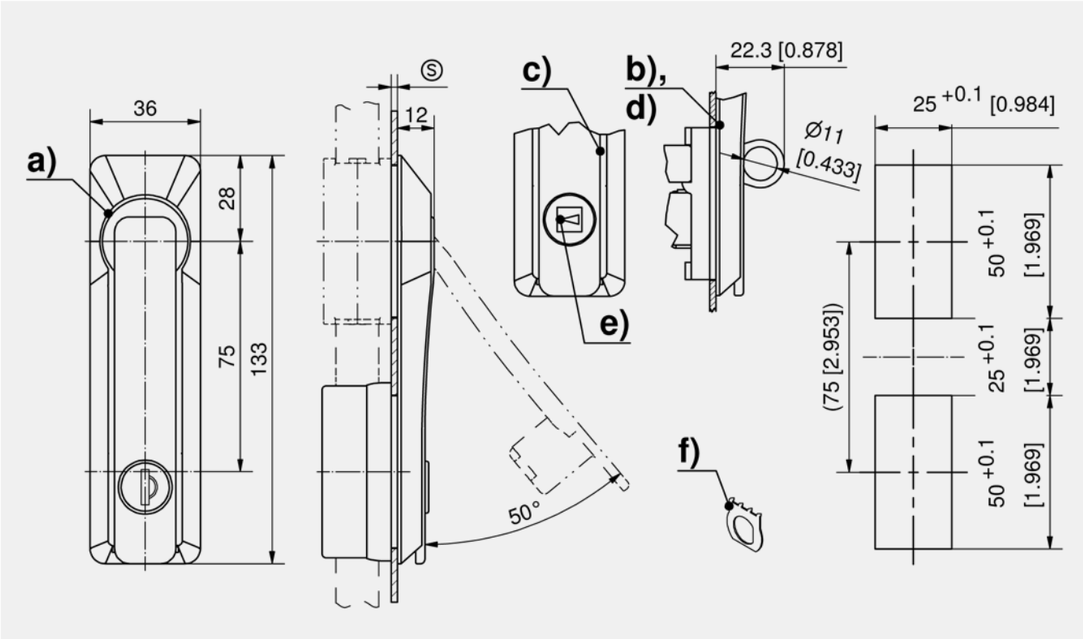

Swinghandle zinc die, with key cylinder

	Part Number	Latching type	Surface handle	Surface dish	Installation type	Delivery Unit
a)	407-9001.00-00000	keyed alike DIRAK 1333	black	black	screw-on	1 pc.
a)	507-9001.00-00000	keyed alike DS200	black	black	screw-on	1 pc.
a)	407-9002.00-00000	keyed different	black	black	screw-on	1 pc.
a)	407-9005.00-00000	keyed alike DIRAK 1333	chrome plated	chrome plated	screw-on	1 pc.
a)	507-9005.00-00000	keyed alike DS200	chrome plated	chrome plated	screw-on	1 pc.
a)	407-9006.00-00000	keyed different	chrome plated	chrome plated	screw-on	1 pc.
a)	407-9009.00-00000	keyed alike DIRAK 1333	chrome plated	black	screw-on	1 pc.
a)	507-9009.00-00000	keyed alike DS200	chrome plated	black	screw-on	1 pc.
a)	407-9010.00-00000	keyed different	chrome plated	black	screw-on	1 pc.
a)	407-9015.00-00000	keyed alike DIRAK 1333	black	chrome plated	screw-on	1 pc.
a)	507-9015.00-00000	keyed alike DS200	black	chrome plated	screw-on	1 pc.
a)	407-9016.00-00000	keyed different	black	chrome plated	screw-on	1 pc.

3-070

all product details on DIRAK.com

Swinghandle zinc die, dish PA, black, with key cylinder

	Part Number	Latching type	Surface handle	Surface dish	Installation type	Delivery Unit
a)	407-9021.00-00000	keyed alike DIRAK 1333	black	black	screw-on	1 pc.
a)	507-9021.00-00000	keyed alike DS200	black	black	screw-on	1 pc.
a)	407-9022.00-00000	keyed different	black	black	screw-on	1 pc.
a)	407-9025.00-00000	keyed alike DIRAK 1333	chrome plated	black	screw-on	1 pc.
a)	507-9025.00-00000	keyed alike DS200	chrome plated	black	screw-on	1 pc.
a)	407-9026.00-00000	keyed different	chrome plated	black	screw-on	1 pc.

Swinghandle zinc die, with key cylinder and padlock eye

	Part Number	Latching type	Surface handle	Surface dish	Installation type	Delivery Unit
b)	407-9033.00-00000	keyed alike DIRAK 1333	chrome plated	chrome plated	screw-on	1 pc.
b)	407-9034.00-00000	keyed different	chrome plated	chrome plated	screw-on	1 pc.
b)	407-9035.00-00000	keyed alike DIRAK 1333	black	black	screw-on	1 pc.
b)	407-9036.00-00000	keyed different	black	black	screw-on	1 pc.

Swinghandle zinc die for insert

	Part Number	Latching type	Surface handle	Surface dish	Installation type	Delivery Unit
c)	407-9101.00-00000	Insert	black	black	screw-on	1 pc.
c)	407-9103.00-00000	Insert	chrome plated	chrome plated	screw-on	1 pc.
c)	407-9105.00-00000	Insert	chrome plated	black	screw-on	1 pc.
c)	407-9107.00-00000	Insert	black	chrome plated	screw-on	1 pc.

Swinghandle zinc die for insert, with padlock eye

	Part Number	Latching type	Surface handle	Surface dish	Installation type	Delivery Unit
d)	407-9113.00-00000	Insert	chrome plated	chrome plated	screw-on	1 pc.
d)	407-9114.00-00000	Insert	black	black	screw-on	1 pc.
d)	407-9115.00-00000	Insert	black	chrome plated	screw-on	1 pc.
d)	407-9116.00-00000	Insert	chrome plated	black	screw-on	1 pc.

Swinghandle zinc die, dish PA for insert

	Part Number	Latching type	Surface handle	Surface dish	Installation type	Delivery Unit
c)	407-9117.00-00000	Insert	black	black	screw-on	1 pc.
c)	407-9119.00-00000	Insert	chrome plated	black	screw-on	1 pc.

Swinghandle zinc die, dish PA for insert, with padlock eye

	Part Number	Latching type	Surface handle	Surface dish	Installation type	Delivery Unit
d)	407-9123.00-00000	Insert	black	black	screw-on	1 pc.
d)	407-9124.00-00000	Insert	chrome plated	black	screw-on	1 pc.

Accessories

e) 303 2-141 **Inserts**
f) 302, 366 3-011 **Grounding Clip Stainless Steel**
357 208-9021.00-00000 **Rod latch**
357 208-9022.00-00000 **Rod latch**
356 3-075 **Rod Latch FS PrB**
367 3-160 **Flat Rod FS with Rollers**
378 3-910 **Rod Guide FS 23mm**
768 6-100 **Wrench**
766 6-101 **Universal key**

Assembly options

207-0016.00-00000 **Assembling of inserts / profile-cylinder**

Handles for Rod Latch FS PrC

[3-140]

Advantages

- T- and L-handles and wing knob for use with rod latch product systems 3-130, 3-132.02, 3-165 or 3-170.
- IP65 according to DIN EN 60529 (optional).
- Grounding by grounding clip (optional).
- Key cylinders are supplied with 2 keys.
- Mounting screws are included.

Materials

- **Wing knob, T-handle and L-handle:** PA, black / zinc die, untreated

Remarks

Door-thickness 1.5 - 2.5mm

1. recess for lable 20 x 8mm

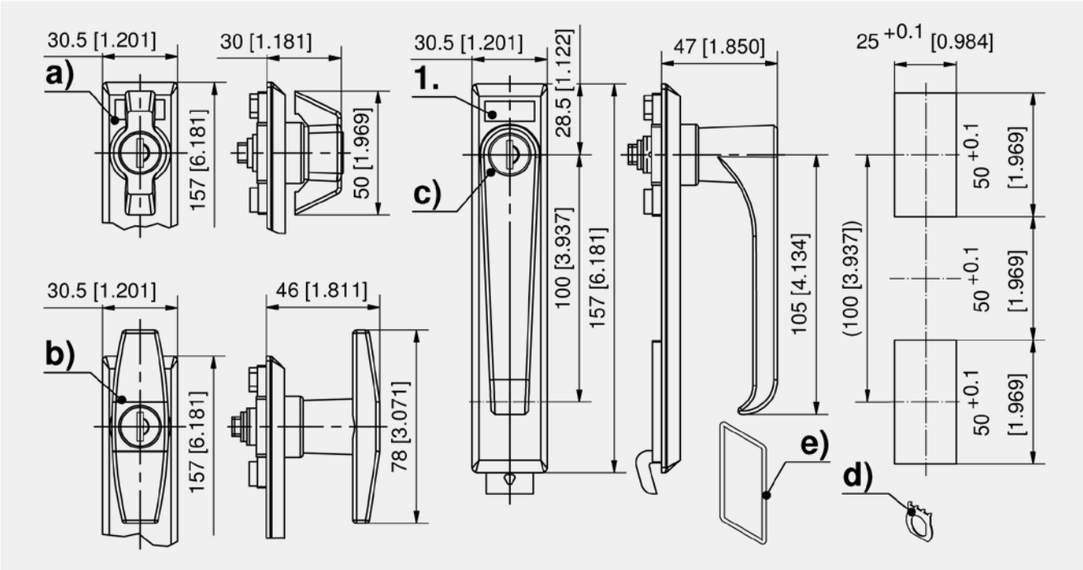

Handles for rod latch

	Part Number	Name	Latching type	IP protection	Installation type	Delivery Unit
a)	208-9610.00-00000	Wing knob		IP65	screw-on	1 pc.
a)	208-9611.00-00000	Wing knob	keyed alike DIRAK 1333		screw-on	1 pc.
a)	508-9611.00-00000	Wing knob	keyed alike DS200		screw-on	1 pc.
a)	208-9612.00-00000	Wing knob	keyed different		screw-on	1 pc.
b)	208-9613.00-00000	T-handle		IP65	screw-on	1 pc.
b)	208-9614.00-00000	T-handle	keyed alike DIRAK 1333		screw-on	1 pc.
b)	508-9614.00-00000	T-handle	keyed alike DS200		screw-on	1 pc.
b)	208-9615.00-00000	T-handle	keyed different		screw-on	1 pc.
c)	208-9616.00-00000	L-handle		IP65	screw-on	1 pc.
c)	208-9617.00-00000	L-handle	keyed alike DIRAK 1333		screw-on	1 pc.
c)	508-9617.00-00000	L-handle	keyed alike DS200		screw-on	1 pc.
c)	208-9618.00-00000	L-handle	keyed different		screw-on	1 pc.

+	Accessories
360	3-130 **Rod Latch FS PrC**
380	3-170 **Rod Latch for Multi-Point Locking FS PrC**

*	Function extension
d) 302, 366	3-011 **Grounding Clip Stainless Steel**
e)	208-1802.00-00000 **O-ring 39.45 x 1.78mm**

3-140

all product details on DIRAK.com

Eject and Turn T-Handle FS/RS

See page 350

Swinghandle FS PrC

[3-149]

Advantages

- Low profile design.
- Cylinder barrel DIRAK 1333 with stainless steel dust cap and 2 keys.
- Captive seal.
- IP65 according to DIN EN 60529.
- RH / LH application.
- Grounding by grounding clip (optional).

Materials

- **Swinghandle:** zinc die, black
- **Dish, cam:** PA6, black
- **O-ring:** NBR Perbunan, black

Remarks

(S) Door-thickness max.2mm

1. fastening bracket

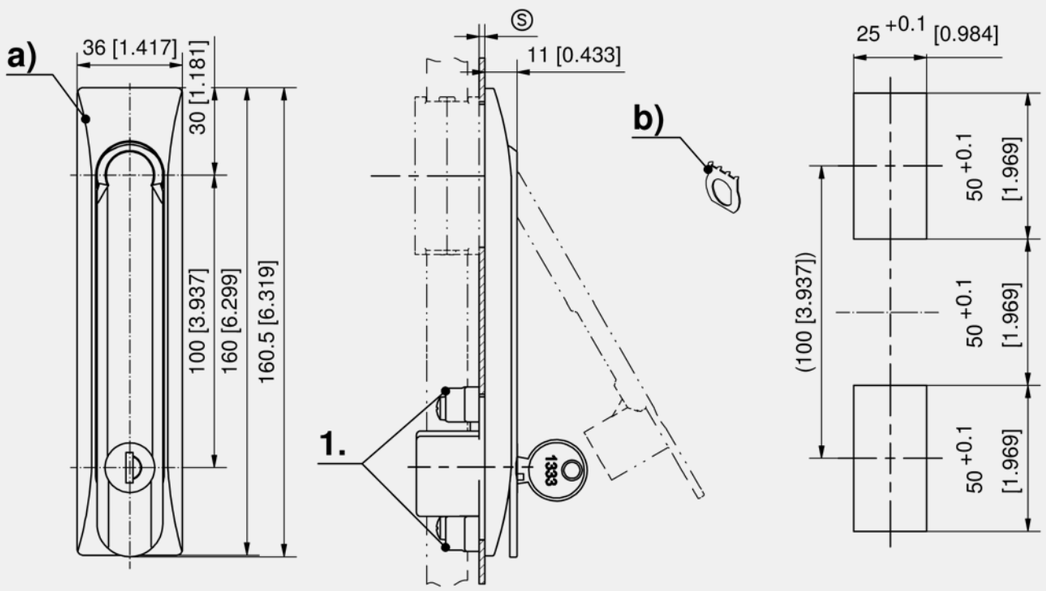

Swinghandle

	Part Number	Latching type	Installation type	Delivery Unit
a)	352-2165.00-00004	keyed alike DIRAK 1333	screw-on	1 pc.

*	Function extension
b)	302, 366 3-011 **Grounding Clip Stainless Steel**
	360 3-130 **Rod Latch FS PrC**
	364 3-132.02 **Rod Latch RS PrC**
	371 3-165 **Rod Latch FS PrC and Angle Pieces with Rollers**
	380 3-170 **Rod Latch for Multi-Point Locking FS PrC**

all product details on DIRAK.com
3-149

Swinghandle SOFTLINE FS PrC

[3-155.02]

Advantages

- The swinghandle can be locked with 40mm profile-cylinders (DIN 18252), cylinder or insert.
- Locking stub is included in handle-assembly.
- Available with two different sliding dustcovers, enabling the locking with profile-cylinders having a protruding cylinder head.
- Version c) is supplied with 2 keys.
- Version with dish cap IP65 according to DIN EN 60529.
- For non IP65 applications - version dish with hook.
- Grounding by grounding clip (optional).

Materials

- **Swinghandle, dish and sliding cover :** PA, black

Remarks

(S) Door-thickness 1.5 - 2.5mm

Inserts must be ordered separately.

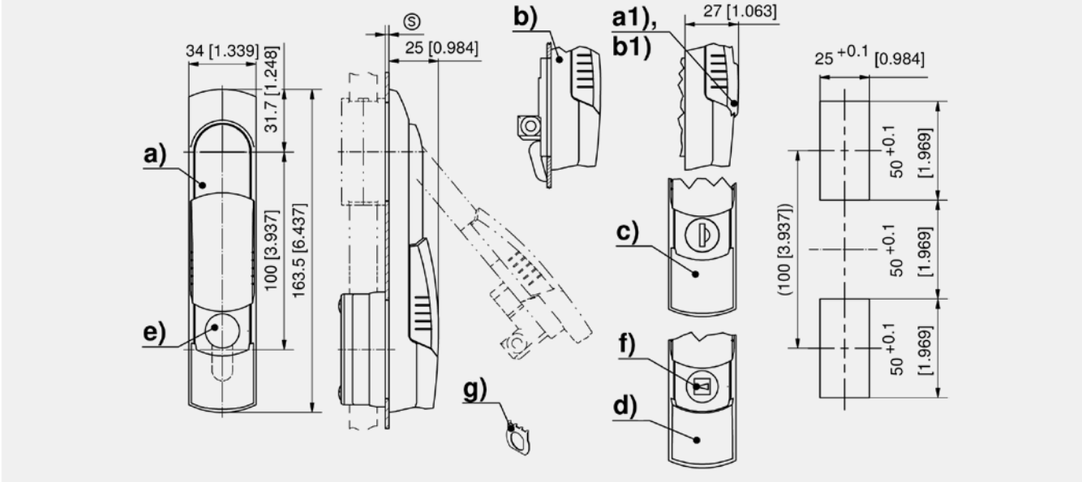

Swinghandle PA, black

	Part Number	Latching type	Dish	IP protection	Sliding dustover	Installation type	Delivery Unit
a)	107-9001.00-00000	PHZ 40mm	with cap	IP65	for up to 2.5mm protruding key-barrel part	screw-on	1 pc.
a1)	107-9002.00-00000	PHZ 40mm	with cap	IP65	for up to 5mm protruding key-barrel part	screw-on	1 pc.
b)	107-9003.00-00000	PHZ 40mm	with hook		for up to 2.5mm protruding key-barrel part	screw-on	1 pc.
b1)	107-9004.00-00000	PHZ 40mm	with hook		for up to 5mm protruding key-barrel part	screw-on	1 pc.
c)	107-9010.00-00000	keyed alike DIRAK 1333	with cap	IP65	for up to 2.5mm protruding key-barrel part	screw-on	1 pc.
c)	507-9208.00-00000	keyed alike DS200	with cap	IP65	for up to 2.5mm protruding key-barrel part	screw-on	1 pc.
c)	107-9012.00-00000	keyed different	with cap	IP65	for up to 2.5mm protruding key-barrel part	screw-on	1 pc.
c)	107-9013.00-00000	keyed alike DIRAK 1333	with hook		for up to 2.5mm protruding key-barrel part	screw-on	1 pc.
c)	507-9209.00-00000	keyed alike DS200	with hook		for up to 2.5mm protruding key-barrel part	screw-on	1 pc.
c)	107-9015.00-00000	keyed different	with hook		for up to 2.5mm protruding key-barrel part	screw-on	1 pc.
d)	107-9016.00-00000	Insert	with cap	IP65	for up to 2.5mm protruding key-barrel part	screw-on	1 pc.
d)	107-9017.00-00000	Insert	with hook		for up to 2.5mm protruding key-barrel part	screw-on	1 pc.

+	Accessories
e)	304, 388 2-140 **Profile-Cylinder DIN 18252**
f)	303 2-141 **Inserts**
g)	302, 366 3-011 **Grounding Clip Stainless Steel**
	207-0016.00-00000 **Assembling of inserts / profile-cylinder**
	360 3-130 **Rod Latch FS PrC**
	358 3-132.01 **Rod Latch RS PrB**

+	Accessories
	367 3-160 **Flat Rod FS with Rollers**
	371 3-165 **Rod Latch FS PrC and Angle Pieces with Rollers**
	380 3-170 **Rod Latch for Multi-Point Locking FS PrC**
	378 3-910 **Rod Guide FS 23mm**
	768 6-100 **Wrench**
	766 6-101 **Universal key**

all product details on DIRAK.com
3-155.02

Swinghandle FS PrC for PHZ

[3-150]

Advantages

- Swinghandle for profile-cylinder according to DIN 18252.
- Lockable with 40mm / 45mm profile-cylinder with 45° locking cam.
- Variants with additional padlock eye.
- Version with cylinder cover is securable with wire padlock.
- IP65 according to DIN EN 60529 - version dish with cap.
- Dish with hook version is secured outside the sealed area.
- RH / LH application.
- Grounding by grounding clip (optional).

Materials

- **Swinghandle:** zinc die, black or PA, black
- **Dish:** zinc die, black or PA, black

Remarks

(S) Door-thickness 1.5 - 2.5mm

The swinghandles can be retrofitted with sliding cap product system 2-091.

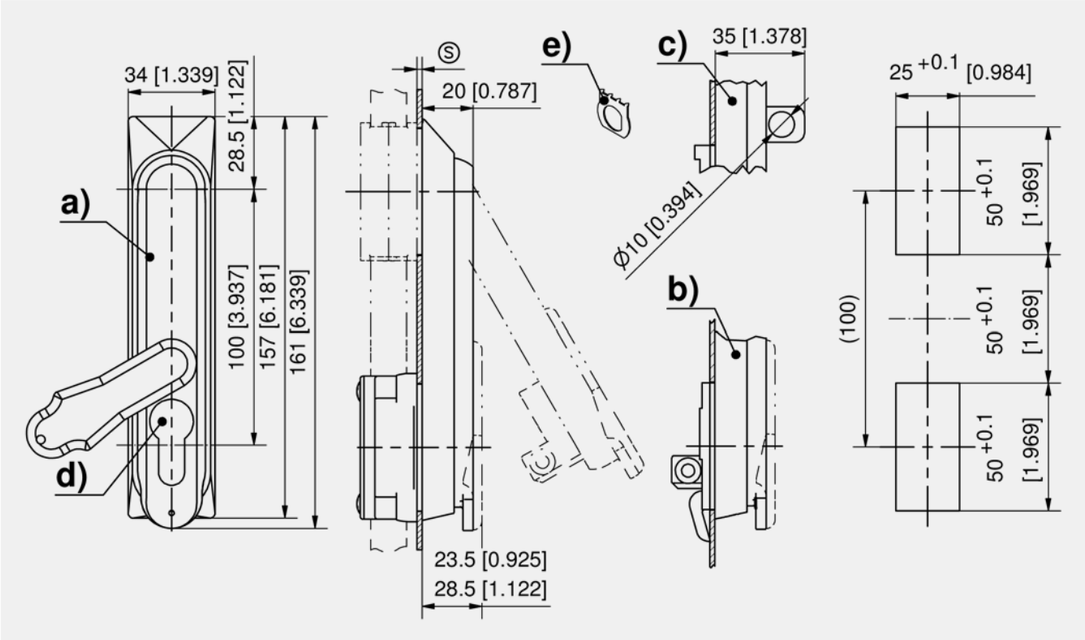

Swinghandle PA for PHZ

	Part Number	Latching type	Dish	IP protection	Cylinder cover material	Securable	Installation type	Delivery Unit
a)	207-9201.00-00000	PHZ 40mm	with cap	IP65			screw-on	1 pc.
a)	207-9202.00-00000	PHZ 40mm	with cap	IP65	PA	Yes	screw-on	1 pc.
b)	207-9204.00-00000	PHZ 40mm	with hook				screw-on	1 pc.
b)	207-9206.00-00000	PHZ 40mm	with hook		PA	Yes	screw-on	1 pc.
a)	207-9203.00-00000	PHZ 45mm	with cap	IP65	PA	Yes	screw-on	1 pc.
b)	207-9205.00-00000	PHZ 45mm	with hook				screw-on	1 pc.
b)	207-9207.00-00000	PHZ 45mm	with hook		PA	Yes	screw-on	1 pc.

Swinghandle zinc die, dish PA for profile-cylinder

	Part Number	Latching type	Dish	IP protection	Cylinder cover material	Securable	Installation type	Delivery Unit
a)	207-9297.00-00000	PHZ 40mm	with cap	IP65			screw-on	1 pc.
a)	207-9296.00-00000	PHZ 40mm	with cap	IP65	PA	Yes	screw-on	1 pc.
b)	107-9273.00-00000	PHZ 40mm	with hook				screw-on	1 pc.
a)	207-9298.00-00000	PHZ 45mm	with cap	IP65	PA	Yes	screw-on	1 pc.

Swinghandle PA for PHZ and padlock

	Part Number	Latching type	Dish	IP protection	Padlock bolt	Installation type	Delivery Unit
c)	207-9208.00-00000	PHZ 40mm	with cap	IP65	Yes	screw-on	1 pc.
c)	207-9209.00-00000	PHZ 40mm	with hook		Yes	screw-on	1 pc.

Swinghandle zinc die, dish zinc die for profile-cylinder

	Part Number	Latching type	Dish	IP protection	Cylinder cover material	Securable	Installation type	Delivery Unit
a)	107-9209.00-00000	PHZ 40mm	with cap	IP65	zinc die	Yes	screw-on	1 pc.

	Accessories
d)	304, 388 2-140 **Profile-Cylinder DIN 18252**
	360 3-130 **Rod Latch FS PrC**
	364 3-132.02 **Rod Latch RS PrC**
	371 3-165 **Rod Latch FS PrC and Angle Pieces with Rollers**
	380 3-170 **Rod Latch for Multi-Point Locking FS PrC**

	Function extension
e)	302, 366 3-011 **Grounding Clip Stainless Steel**

3-150
all product details on DIRAK.com

Swinghandle FS PrC with Key Cylinder

[3-150.01]

Advantages

- Swinghandle with assembled key cylinder and 2 keys.
- Available in keyed alike and keyed different versions.
- With stainless steel dust-shutter.
- Version with cylinder cover is securable with wire padlock.
- IP65 according to DIN EN 60529 - version dish with cap.
- Dish with hook version is secured outside the sealed area.
- RH / LH application.
- Grounding by grounding clip (optional).

Materials

- **Swinghandle**: zinc die, chrome plated or black, or PA, black
- **Dish:** PA, black

Remarks

(S) Door-thickness 1.5 - 2.5mm

The swinghandles can be retro-fitted with sliding cap product system 2-091.

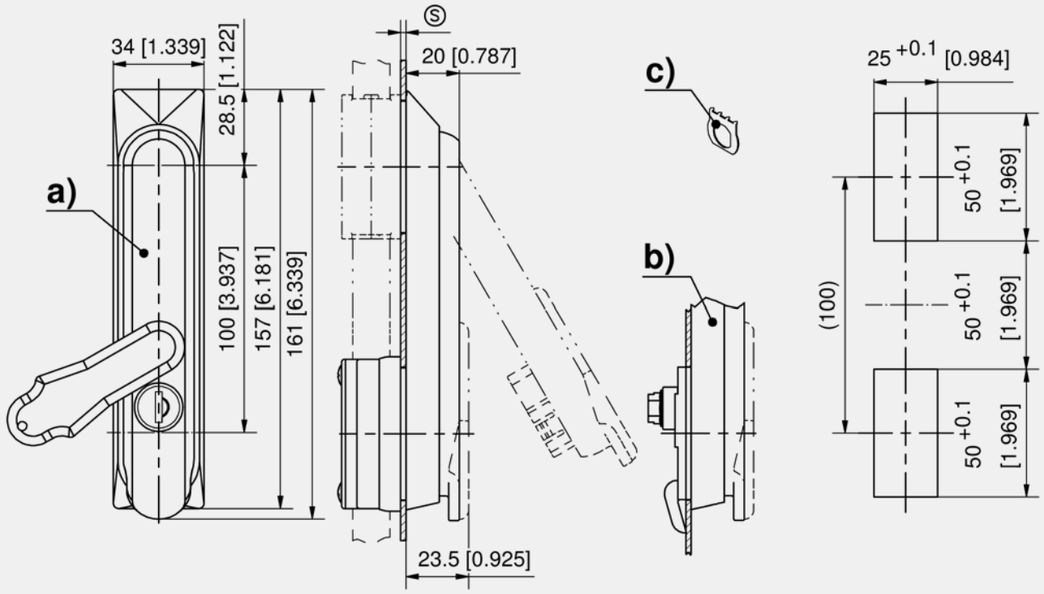

3-150.01

all product details on DIRAK.com

Swinghandle PA with key cylinder

	Part Number	Latching type	Surface handle	Dish	IP protection	Cylinder cover material	Securable	Installation type	Delivery Unit
a)	207-9262.00-00000	keyed alike DIRAK 1333	black	with cap	IP65			screw-on	1 pc.
a)	207-9263.00-00000	keyed alike DIRAK 1333	black	with cap	IP65	PA	Yes	screw-on	1 pc.
b)	207-9266.00-00000	keyed alike DIRAK 1333	black	with hook				screw-on	1 pc.
b)	207-9267.00-00000	keyed alike DIRAK 1333	black	with hook		PA	Yes	screw-on	1 pc.
a)	507-9262.00-00000	keyed alike DS200	black	with cap	IP65			screw-on	1 pc.
a)	507-9263.00-00000	keyed alike DS200	black	with cap	IP65	PA	Yes	screw-on	1 pc.
b)	507-9266.00-00000	keyed alike DS200	black	with hook				screw-on	1 pc.
b)	507-9267.00-00000	keyed alike DS200	black	with hook		PA	Yes	screw-on	1 pc.
a)	207-9264.00-00000	keyed different	black	with cap	IP65			screw-on	1 pc.
a)	207-9265.00-00000	keyed different	black	with cap	IP65	PA	Yes	screw-on	1 pc.
b)	207-9268.00-00000	keyed different	black	with hook				screw-on	1 pc.
b)	207-9269.00-00000	keyed different	black	with hook		PA	Yes	screw-on	1 pc.

Swinghandle zinc die, dish PA with key cylinder

	Part Number	Latching type	Surface handle	Dish	IP protection	Installation type	Delivery Unit
a)	107-9231.00-00000	keyed alike DIRAK 1333	chrome plated	with cap	IP65	screw-on	1 pc.
a)	107-9230.00-00000	keyed alike DIRAK 1333	black	with cap	IP65	screw-on	1 pc.
b)	107-9235.00-00000	keyed alike DIRAK 1333	chrome plated	with hook		screw-on	1 pc.
b)	107-9234.00-00000	keyed alike DIRAK 1333	black	with hook		screw-on	1 pc.
a)	507-9231.00-00000	keyed alike DS200	chrome plated	with cap	IP65	screw-on	1 pc.
a)	507-9230.00-00000	keyed alike DS200	black	with cap	IP65	screw-on	1 pc.
b)	507-9235.00-00000	keyed alike DS200	chrome plated	with hook		screw-on	1 pc.
b)	507-9234.00-00000	keyed alike DS200	black	with hook		screw-on	1 pc.
a)	107-9239.00-00000	keyed different	chrome plated	with cap	IP65	screw-on	1 pc.
a)	107-9238.00-00000	keyed different	black	with cap	IP65	screw-on	1 pc.
b)	107-9243.00-00000	keyed different	chrome plated	with hook		screw-on	1 pc.
b)	107-9242.00-00000	keyed different	black	with hook		screw-on	1 pc.

	Accessories
360	3-130 **Rod Latch FS PrC**
364	3-132.02 **Rod Latch RS PrC**
380	3-170 **Rod Latch for Multi-Point Locking FS PrC**
371	3-165 **Rod Latch FS PrC and Angle Pieces with Rollers**

	Function extension
c) 302, 366	3-011 **Grounding Clip Stainless Steel**

Swinghandle FS PrC with Combination Lock [3-150.02]

Advantages

- Resetting the combination is only possible in open position.
- Version c) is supplied with 2 keys.
- IP65 according to DIN EN 60529 - version dish with cap.
- Dish with hook version is secured outside the sealed area.
- RH / LH application.
- Grounding by grounding clip (optional).

Materials

- **Swinghandle:** zinc die, chrome plated or black or PA, black
- **Dish:** PA, black

Remarks

(S) Door-thickness 1.5 - 2.5mm

Version c) two opening options:

1. with fixed number code for the combination lock

2. by turning the key in the cylinder. The combination lock is and remains in locked position. The cylinder has the “override” function.

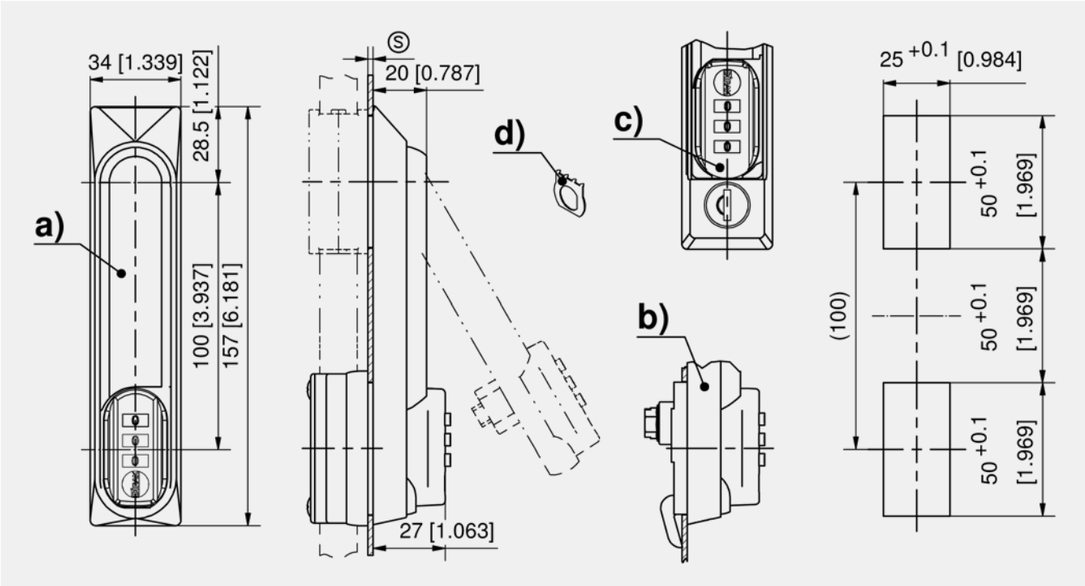

Swinghandle

	Part Number	Latching type	Handle material	Surface handle	Dish	IP protection	Installation type
a)	107-9264.00-00000	combination lock	zinc die	chrome plated	with cap	IP65	screw-on
a)	107-9266.00-00000	combination lock	zinc die	black	with cap	IP65	screw-on
b)	107-9265.00-00000	combination lock	zinc die	chrome plated	with hook		screw-on
b)	107-9267.00-00000	combination lock	zinc die	black	with hook		screw-on
c)	107-9274.00-00000	combination lock and keyed alike DIRAK 1333	PA	black	with cap	IP65	screw-on
c)	107-9276.00-00000	combination lock and keyed alike (specify key number)	PA	black	with cap	IP65	screw-on

	Accessories
360	3-130 **Rod Latch FS PrC**
364	3-132.02 **Rod Latch RS PrC**
371	3-165 **Rod Latch FS PrC and Angle Pieces with Rollers**
380	3-170 **Rod Latch for Multi-Point Locking FS PrC**

		Function extension
d)	302, 366	3-011 **Grounding Clip Stainless Steel**

3-150.02
◂ all product details on DIRAK.com

Swinghandle FS PrC for Insert [3-150.03]

Advantages

- The locking cam is included.
- Version with cylinder cover is securable with wire padlock.
- IP65 according to DIN EN 60529 - version dish with cap.
- Dish with hook version is secured outside the sealed area.
- RH / LH application.
- Grounding by grounding clip (optional).

Materials

- **Swinghandle:** zinc die, chrome plated or black or PA, black
- **Dish:** PA, black

Remarks

(S) Door-thickness 1.5 - 2.5mm

The swinghandles can be retro-fitted with sliding cap product system 2-091.

Inserts must be ordered separately.

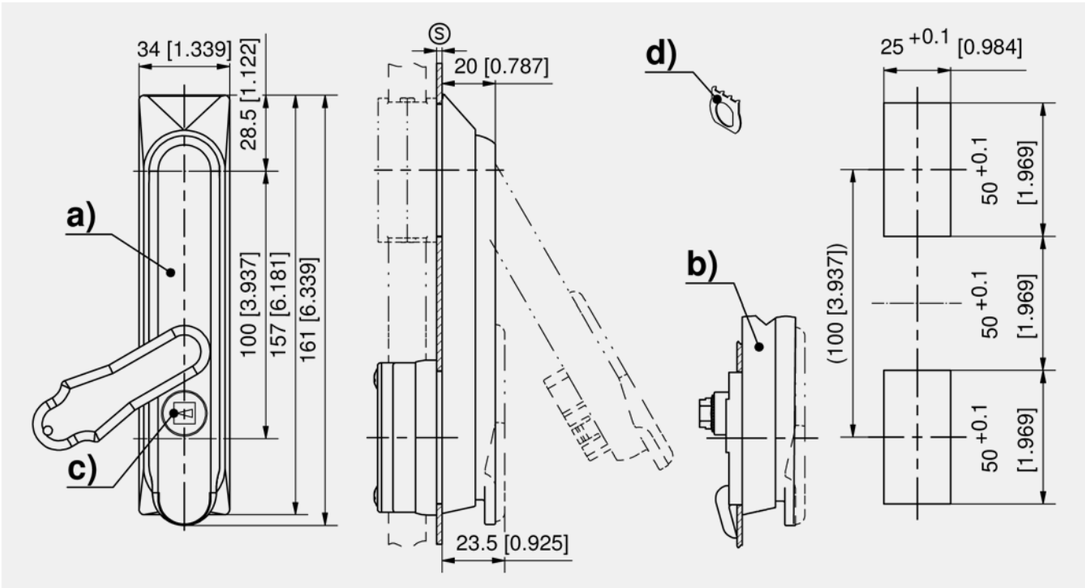

Swinghandle, dish PA, for insert

	Part Number	Handle material	Surface handle	Dish	IP protection	Cylinder cover material	Installation type	Delivery Unit
a)	107-9247.00-00000	zinc die	chrome plated	with cap	IP65		screw-on	1 pc.
a)	107-9246.00-00000	zinc die	black	with cap	IP65		screw-on	1 pc.
b)	107-9251.00-00000	zinc die	chrome plated	with hook			screw-on	1 pc.
b)	107-9250.00-00000	zinc die	black	with hook			screw-on	1 pc.
a)	207-9270.00-00000	PA	black	with cap	IP65		screw-on	1 pc.
a)	207-9271.00-00000	PA	black	with cap	IP65	PA	screw-on	1 pc.
b)	207-9272.00-00000	PA	black	with hook			screw-on	1 pc.
b)	207-9273.00-00000	PA	black	with hook		PA	screw-on	1 pc.

	Accessories
c) 303	2-141 **Inserts**
360	3-130 **Rod Latch FS PrC**
364	3-132.02 **Rod Latch RS PrC**
371	3-165 **Rod Latch FS PrC and Angle Pieces with Rollers**
380	3-170 **Rod Latch for Multi-Point Locking FS PrC**

		Function extension
d)	302, 366	3-011 **Grounding Clip Stainless Steel**

all product details ▸ on DIRAK.com
3-150.03

Swinghandle FS PrC clip-in [3-150.04]

Advantages

- Swinghandel without lock **only** self-locking.
- Variants with additional pad-lock eye.
- IP65 according to DIN EN 60529 - version dish with cap.
- Dish with hook version is secured outside the sealed area.
- RH / LH application.
- Grounding by grounding clip (optional).

Materials

- **Swinghandle:** PA, black
- **Dish:** PA, black

Remarks

(S) Door-thickness 1.5 - 2.5mm

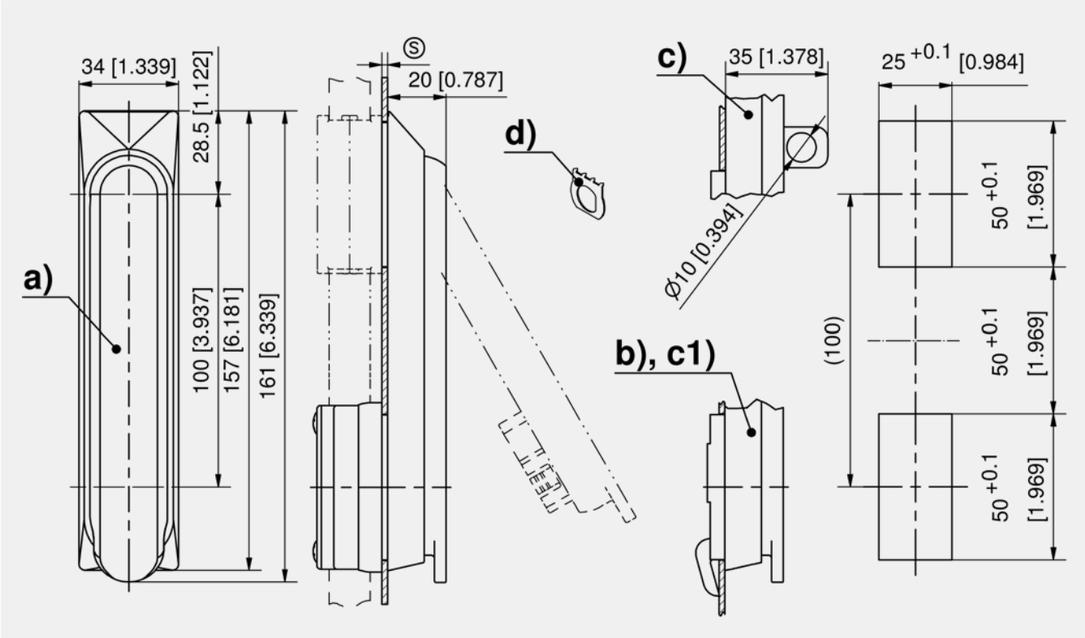

Swinghandle PA, handle closed

	Part Number	Dish	IP protection	Padlock bolt	Installation type	Delivery Unit
a)	107-9256.00-00000	with cap	IP65		screw-on	1 pc.
b)	107-9257.00-00000	with hook			screw-on	1 pc.
c)	107-9258.00-00000	with cap	IP65	Yes	screw-on	1 pc.
c1)	107-9259.00-00000	with hook		Yes	screw-on	1 pc.

	Accessories
360	3-130 **Rod Latch FS PrC**
364	3-132.02 **Rod Latch RS PrC**
371	3-165 **Rod Latch FS PrC and Angle Pieces with Rollers**
380	3-170 **Rod Latch for Multi-Point Locking FS PrC**

	Function extension
d) 302, 366	3-011 **Grounding Clip Stainless Steel**

all product details on DIRAK.com
3-150.04

Swinghandle FS PrC for KABA-/ Assa-Cylinder [3-150.05]

Advantages

- Swinghandle a) with Ø22mm for KABA 8-cylinder.
- Swinghandle b) with oblong hole 35x20mm for Assa-, Abloy-, TrioVing-cylinder. Suitable for 5- or 7-piston cylinder. Locking cam, adapter and fitting material is included for both versions.
- Version with cylinder cover is securable with wire padlock.
- IP65 according to DIN EN 60529.
- RH / LH application.
- Grounding by grounding clip (optional).

Materials

- **Swinghandle and dish:** PA, black

Remarks

(S) Door-thickness 1.5 - 2.5mm

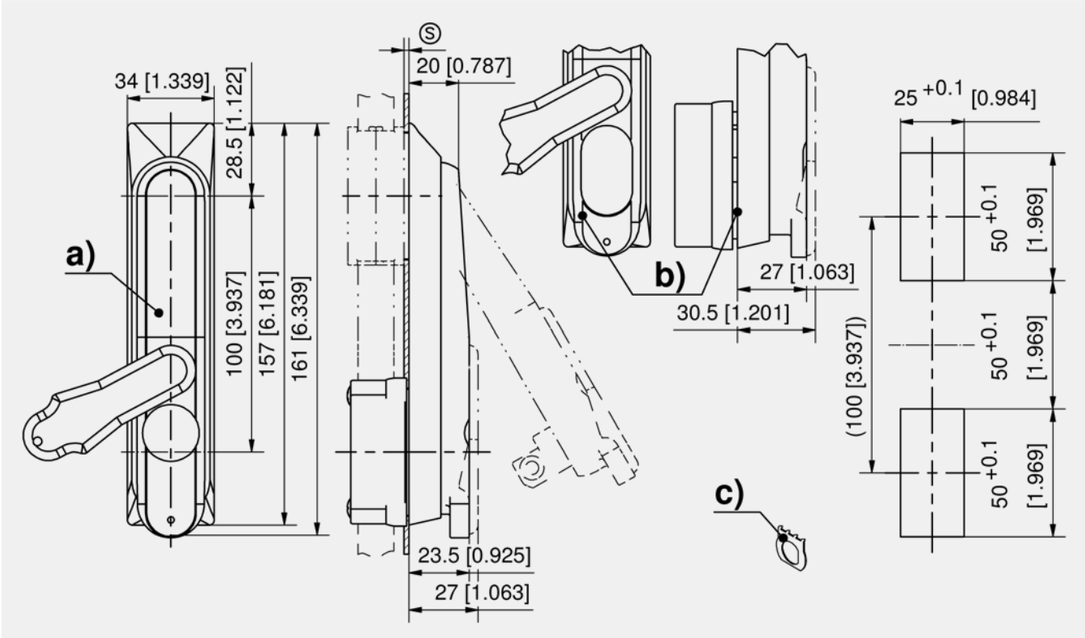

Swinghandle PA, dish with cap

	Part Number	Latching type	Cylinder cover material	Securable	Installation type	Delivery Unit
a)	207-9214.00-00000	KABA-cylinder			screw-on	1 pc.
a)	207-9215.00-00000	KABA-cylinder	PA	Yes	screw-on	1 pc.
b)	207-9218.00-00000	Assa / Abloy / TrioVing			screw-on	1 pc.
b)	207-9219.00-00000	Assa / Abloy / TrioVing	PA	Yes	screw-on	1 pc.
b)	207-9220.00-00000	Assa / Abloy / TrioVing	PA, reinforced	Yes	screw-on	1 pc.

	Accessories
360	3-130 **Rod Latch FS PrC**
364	3-132.02 **Rod Latch RS PrC**
371	3-165 **Rod Latch FS PrC and Angle Pieces with Rollers**
380	3-170 **Rod Latch for Multi-Point Locking FS PrC**

	Function extension
c) 302, 366	3-011 **Grounding Clip Stainless Steel**

all product details on DIRAK.com
3-150.05

DST Swinghandle FS PrC for PHZ

[3-150DST]

Advantages

- Swinghandle for profile-cylinder to DIN 18252.
- Tool-less installation.
- Installation with internal caps and o-ring for IP65 EN 60529 (seals are included).
- The swinghandle is symmetric and can be applied both for RH and LH doors.
- The swinghandle pre-assembled by DIRAK is hooked into the cutout provided and then clipped into place in the upper area.
- The flat rods are placed into shown position and secured by the clip-on PA cover.

Materials

- **Swinghandle and dish:** PA, black
- **Snap wedges and pinion:** sintered steel

Remarks

Suitable flat rods see product system 3-171DST.

1. stroke 24mm
2. clearance height
3. hook-in the lower part and snap-in the swinghandle
4. LH, clockwise opening door
5. RH, counterclockwise opening door
6. clip cover

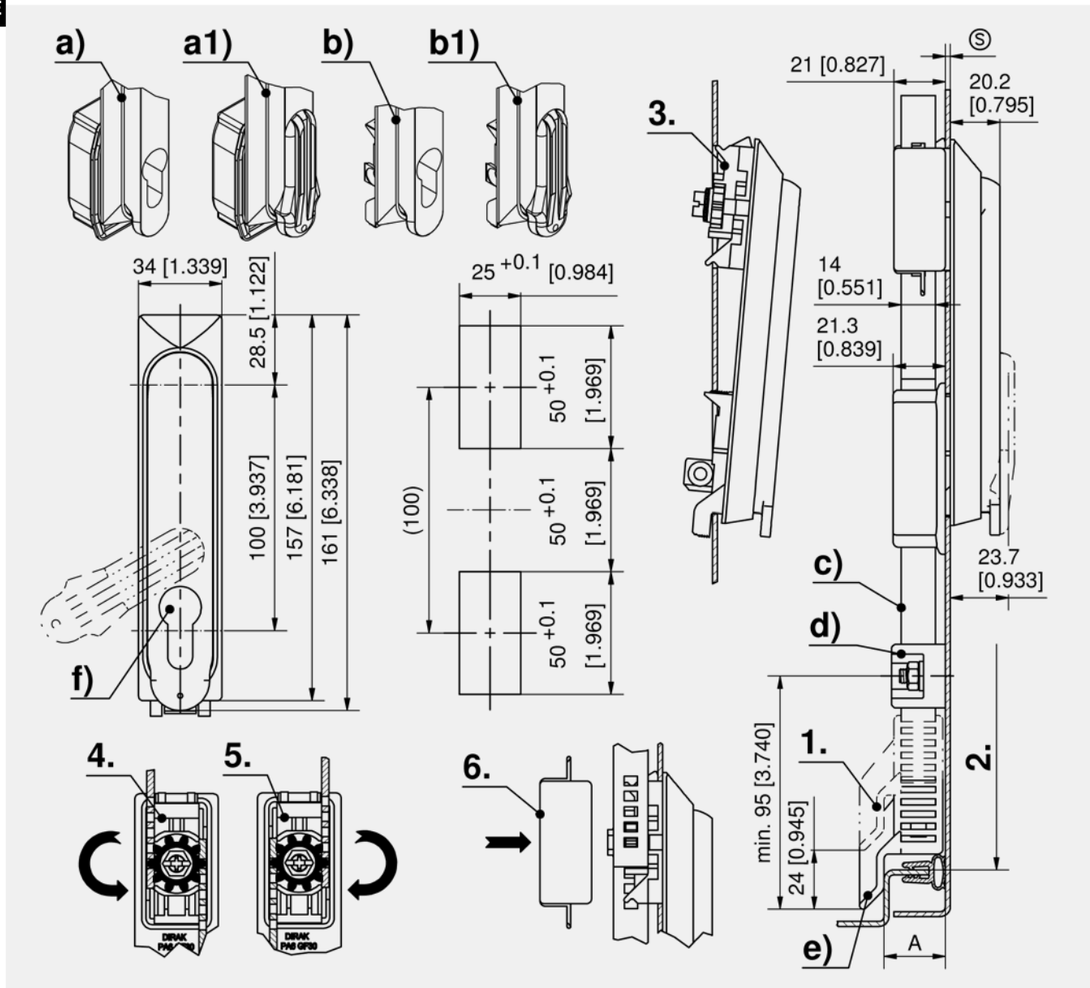

3-150DST

all product details on DIRAK.com

Swinghandle PA for PHZ 40mm

	Part Number	Clamping range (S)	Dish	IP protection	Cylinder cover	Installation type	Delivery Unit
a)	407-9501.00-00015	1.3 - 2.0 mm	with hook and cap	IP65		tool-less	1 pc.
a)	407-9501.00-00018	1.5 - 2.2 mm	with hook and cap	IP65		tool-less	1 pc.
a)	407-9501.00-00020	1.8 - 2.5 mm	with hook and cap	IP65		tool-less	1 pc.
a1)	407-9502.00-00015	1.3 - 2.0 mm	with hook and cap	IP65	Yes	tool-less	1 pc.
a1)	407-9502.00-00018	1.5 - 2.2 mm	with hook and cap	IP65	Yes	tool-less	1 pc.
a1)	407-9502.00-00020	1.8 - 2.5 mm	with hook and cap	IP65	Yes	tool-less	1 pc.
b)	407-9504.00-00015	1.3 - 2.0 mm	with hook			tool-less	1 pc.
b)	407-9504.00-00018	1.5 - 2.2 mm	with hook			tool-less	1 pc.
b)	407-9504.00-00020	1.8 - 2.5 mm	with hook			tool-less	1 pc.
b1)	407-9503.00-00015	1.3 - 2.0 mm	with hook		Yes	tool-less	1 pc.
b1)	407-9503.00-00018	1.5 - 2.2 mm	with hook		Yes	tool-less	1 pc.
b1)	407-9503.00-00020	1.8 - 2.5 mm	with hook		Yes	tool-less	1 pc.

	Accessories
c)	383 3-171DST **DST Flat Rods FS variable**
d)	378 3-910 **Rod Guide FS 23mm**
d)	379 3-911 **Rod Guide FS 23mm**
e)	370 3-162 **Ramp-Shoe for Flat Rod**
f)	304, 388 2-140 **Profile-Cylinder DIN 18252**
	334 3-150 **Swinghandle FS PrC for PHZ**

Swinghandle FS PrC Stainless Steel for PHZ [7-060]

Advantages

- Swinghandle for profile cylinder to DIN 18252.
- IP65 according to DIN EN 60529 within the sealed area.
- The padlock device with rectangular base is fitted from the rear and so held captive between door and swinghandle body.
- This opening can be filled with a rectangular blanking plate.

Materials

- **Swinghandle, dish, bearing part, dust cover and padlock bolt:** AISI 316
- **Blanking plate:** AISI 304
- **Swinghandle shaft:** AISI 303
- **Cap:** PA, black

Remarks

(S) Door-thickness 1.5 - 2.5mm

Swinghandle for application with rod latch see product system 7-040 and cutout version PrC 50x25mm.

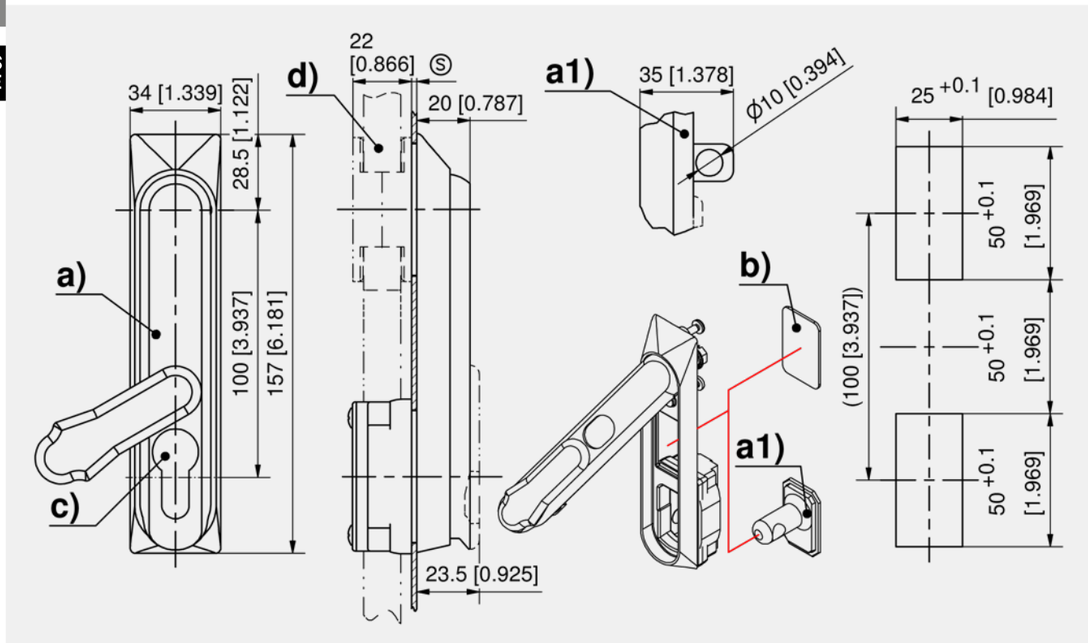

Swinghandle for profile cylinder

	Part Number	Cylinder cover	Padlock	Installation type	Delivery Unit
a)	207-9292.00-00000			screw-on	1 pc.
a)	207-9293.00-00000	Yes		screw-on	1 pc.
a1)	107-9286.00-00000	Yes	Yes	screw-on	1 pc.
a1)	107-9287.00-00000		Yes	screw-on	1 pc.

	Accessories
b)	241 207-2506.80-00000 **Blanking plate for opening**
c)	304, 388 2-140 **Profile-Cylinder DIN 18252**
c)	306, 387 7-069 **Profile-Cylinder Stainless Steel**
d)	362 7-040 **Rod Latch FS PrC Stainless Steel**

7-060

◂ all product details on DIRAK.com

NT Swinghandle FS PrC Stainless Steel for PHZ [7-061]

Advantages

- Low profile swinghandle for profile-cylinder application with rod latch see product system 7-040.
- Protected against vandalism by extremly tight tolerances.
- The flush design prevents this swinghandle being used as climbing support.
- Locking cylinder fitted in the dish and protected against being forced through.
- Bolted internal cap is made of stainless steel.
- IP65 according to DIN EN 60529.
- RH / LH application.

Materials

- **Dish, handle, cover, cap, rotating disk and locking bolt :** AISI 316
- **Spring, pins and screws:** stainless steel
- **Cap sealing:** NBR
- **O-ring:** NBR
- **Washer:** PTFE- Teflon

Remarks

Door-thickness 1.5 - 2.5mm

1. open cover
2. turn key
3. the swinghandle springs open
4. turn handle

Optional cylinder cover screwable by M3x6, drive TX10.

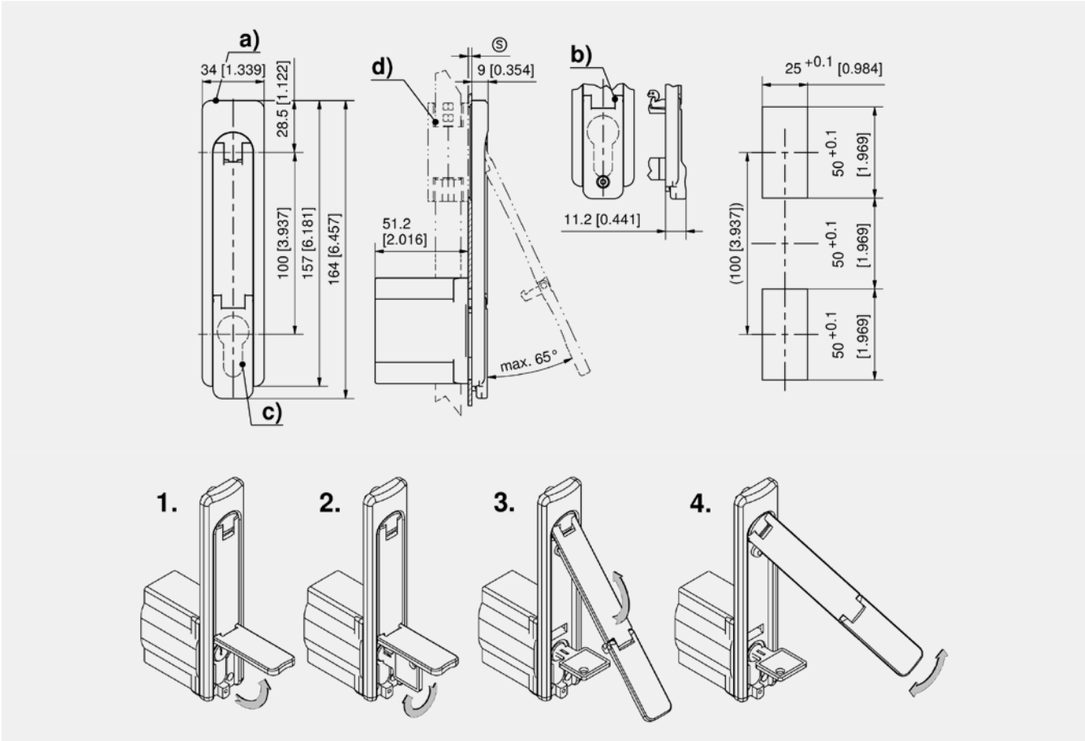

Swinghandle for profile cylinder, dish with cap

	Part Number	Cylinder cover	Version	Installation type	Delivery Unit
a)	307-9301.00-00000	Yes		screw-on	1 pc.
b)	307-9306.00-00000	Yes	cover screw down	screw-on	1 pc.

	Accessories
c)	304, 388 211-9003.00-00000 **DIRAK Profile-cylinder**
c)	304, 388 211-9004.00-00000 **DIRAK Profile-cylinder**
d)	362 7-040 **Rod Latch FS PrC Stainless Steel**

all product details ▸ on DIRAK.com

7-061

NT Swinghandle FS PrC Stainless Steel for PHZ

See page 345

Swinghandle FS OFFSET-DUO-3 for PHZ

[3-310]

Advantages

- For extremely narrow frame width, can be used to control the rod latch product system 3-311.
- The swinghandle controls the rod-slider, which is situated on the outer door.
- At the edge of the door, outside the sealing area, this slider controls the latching rod-system.
- Frame-widths of only 30mm.
- Symmetrical rods allow two-, three- or multi-point latching (product system 3-311).
- IP65 according to DIN EN 60529.

Materials

- **Swinghandle and dish:** PA, black
- **Cap sealing:** NBR
- **Locking slider:** steel, zinc plated
- **Pinion shaft:** zinc die

Remarks

Door-thickness 1.5 - 2.5mm

IP 65

RoHS WEEE

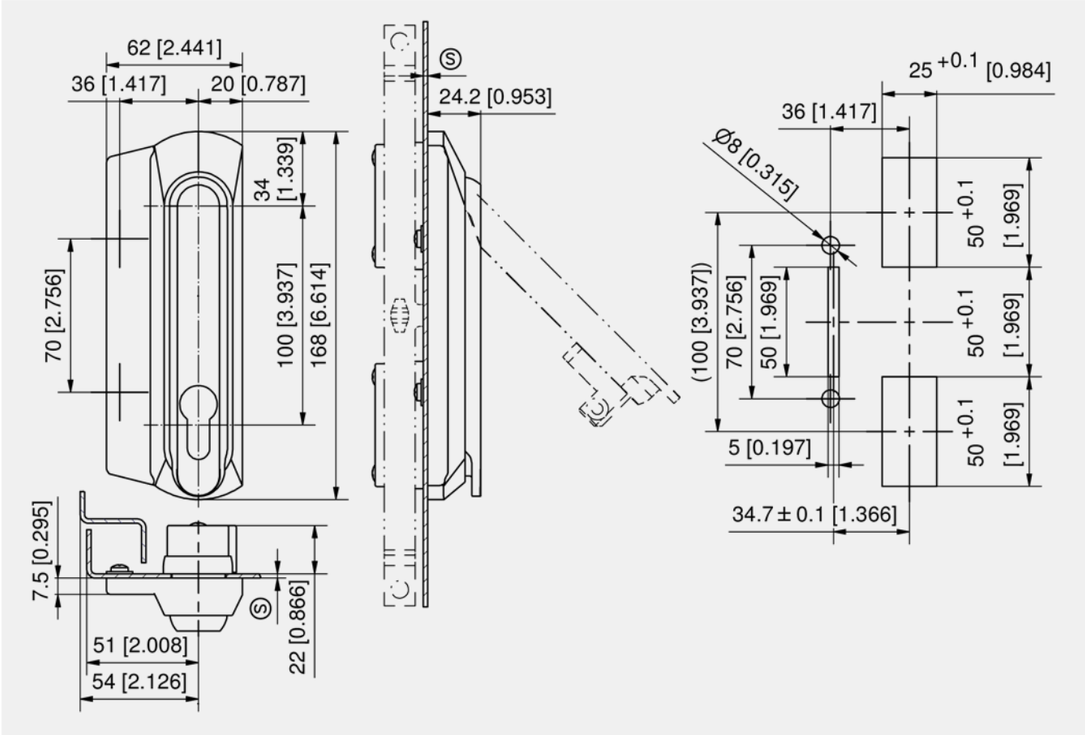

Swinghandle PA

Part Number	Version	Installation outside the seal	Installation type	Delivery Unit
307-9003.00-00000	RH	Yes	screw-on	1 pc.
307-9004.00-00000	LH	Yes	screw-on	1 pc.

	Accessories
	348 3-311 **Rods and Accessories FS OFFSET-DUO-3**

all product details ▸
on DIRAK.com

3-310

Rods and Accessories FS OFFSET-DUO-3

[3-311]

Advantages

- We show a typical 3-point system for a RH door. All rods run exactly in line and the lower rod is starting from the doorcenter, exactly symmetrical to the upper rod (not shown).
- As the fitting positions of the latching hooks are identical to those of the hinges, the door can be installed RH or LH.
- Depending on the installed rod guides and hinges, a minimal frame width of 30mm is possible.
- Quick-fit.

Materials

- **Rods:** steel, zinc plated
- **Latching hook:** zinc die

Remarks

1. stroke 19mm
2. latching tab

Driving rod - per latching system order 1 unit.

Extension rods - per latching system order 2 units.

Latching hooks have to be ordered separately - for quantity please see table.

Flat rods b) on request

Latching rods and accessoires for application with swinghandles OFFSET-DUO-3, product system 3-310.

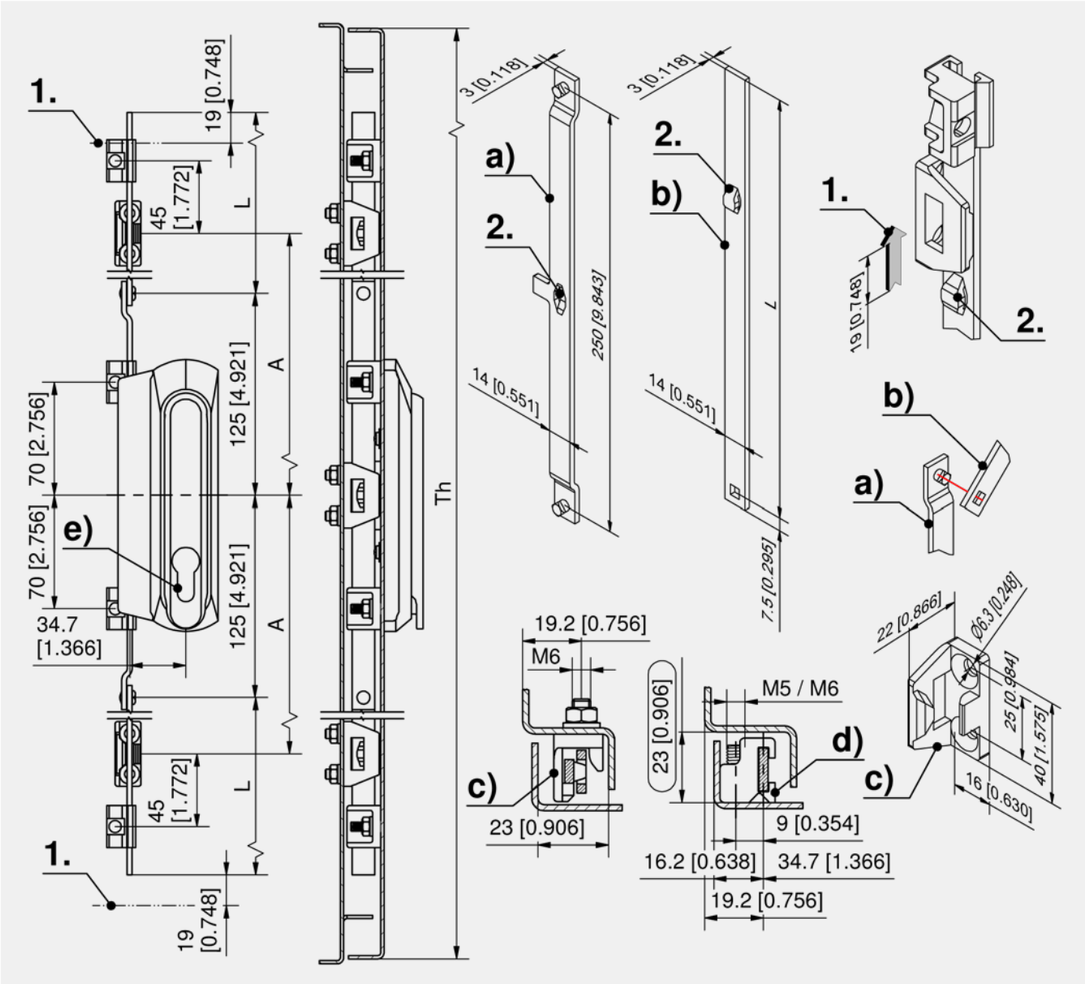

3-311

all product details on DIRAK.com

Flat rods 14x3mm

	Part Number	Type	Door height Th	Distance hook A	Quantity latching hooks	L	Delivery Unit
a)	307-9001.00-00000	Driving rod				250 mm	10 pcs.
b)	208-0942.00-00000	Rod	800 - 1200 mm	300 mm	2	250 mm	10 pcs.
b)	208-0943.00-00000	Rod	1200 - 1600 mm	500 mm	2/3	450 mm	10 pcs.
b)	208-0944.00-00000	Rod	1600 - 1900 mm	700 mm	3	650 mm	10 pcs.
b)	208-0945.00-00000	Rod	1900 - 2200 mm	850 mm	3	800 mm	10 pcs.

Latching hook

	Part Number	Delivery Unit
c)	208-1424.00-00000	1 pc.

	Accessories
d) 378	208-1509.03-00000 **Rod guide PA , 1-part**
d) 378	208-1517.03-00000 **Rod guide PA , 1-part**
e) 304, 388	2-140 **Profile-Cylinder DIN 18252**

Eject and Turn T-Handle FS/RS

[3-145]

RC2

R L

90°

IP 65

RoHS WEEE

Advantages

- T-handle with 90° swing-out and 135° rotatable T-handle element.
- For flat or round rods.
- Safety tested according to RCII DIN 1630.
- Very tight tolerances.
- The flat design prevents the handle from being used as a climbing aid.
- The locking cylinder can not be forced inwards by axial forces.
- The T-handle can not be folded down if not in line with the housing.
- Separate locking device sub-unit. Suitable for: Euro cylinder, KABA cylinder and padlock.
- Application inside or outside the sealed area.
- IP65 according to DIN EN 60529.
- RH / LH application.
- Condensation water drain.

Materials

- **Dish, T-handle:** zinc die, black
- **Flat rod and rod stub:** steel, zinc plated
- **Padlock bolt:** AISI 303
- **O-ring:** NBR, black

Remarks

(S) Door-thickness 1.5 - 2.5mm

1. stroke 24mm

2. position of the spacer if used outside the sealed area

3. position of the spacer if used inside the sealed area

4. closed and locked

5. open cover

6. turn key: T-handle ejects

7. T-handle can be operated

Version with insert on request.

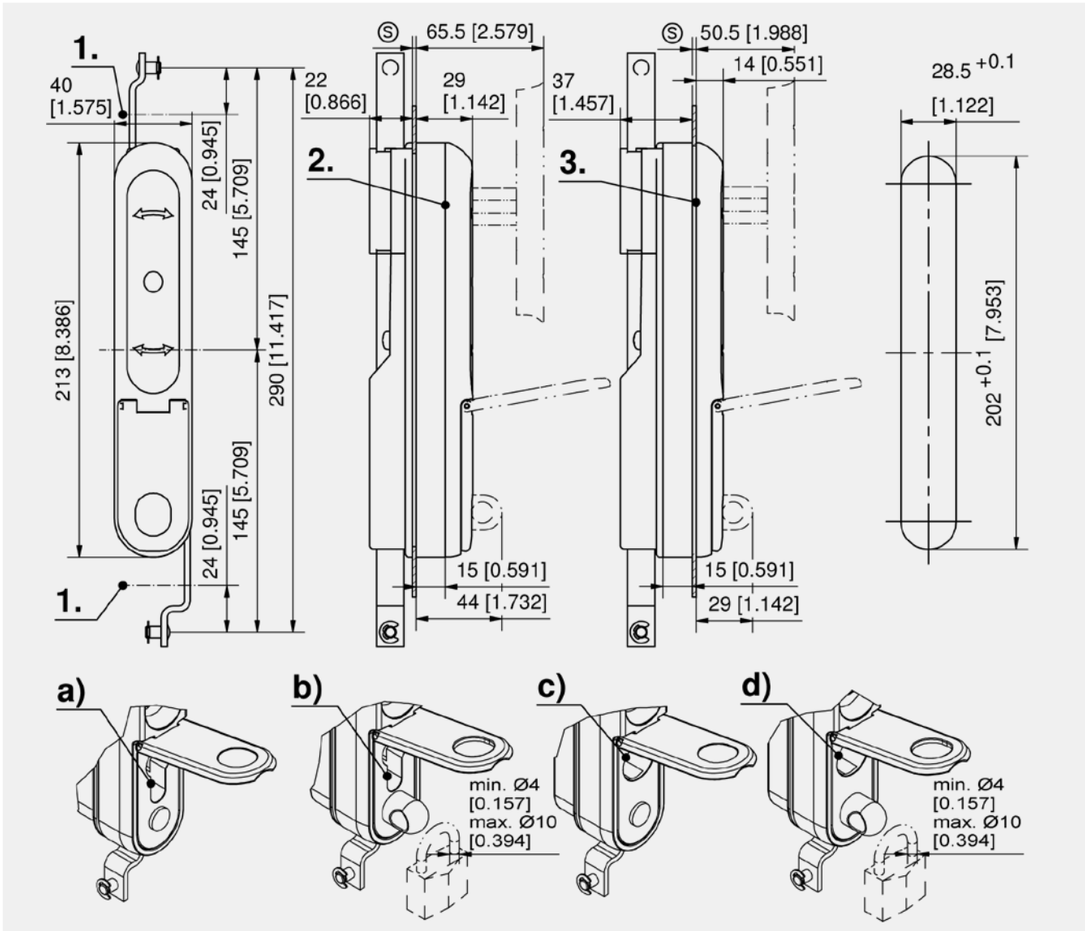

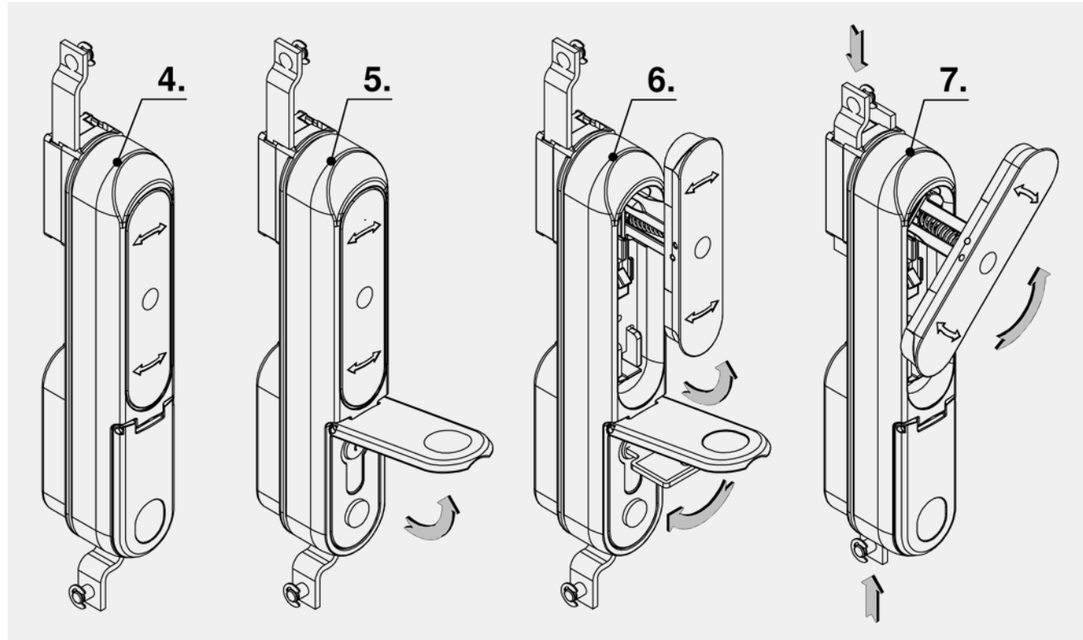

T-handle with cylinder cover

	Part Number	Latching type	Padlock	Installation type	Delivery Unit
a)	302-9001.00-60000	PHZ 40mm		screw-on	1 pc.
b)	302-9001.00-30000	PHZ 40mm	Yes	screw-on	1 pc.
c)	302-9001.00-50000	KABA		screw-on	1 pc.
d)	302-9001.00-20000	KABA	Yes	screw-on	1 pc.

	Accessories
304, 388	211-9003.00-00000 **DIRAK Profile-cylinder**
304, 388	211-9004.00-00000 **DIRAK Profile-cylinder**

3-145

all product details on DIRAK.com

Multi-Point Systems

Rod Latch RS/FS PrA

A

RoHS
WEEE

Advantages

- For cutout A.
- The latch can be used with escutcheon, handles or swinghandle.
- Installation with or without cam.
- For application within the sealed area.
- Can also be used outside the seal in edge area.
- RH / LH application through double symmetry.
- Grounding by grounding clip (optional).

Materials

- **Housing:** zinc die, untreated or PA, black
- **Pinion:** zinc die
- **Rods:** steel, zinc plated

Remarks

1. stroke 24mm
2. stroke 31.4mm

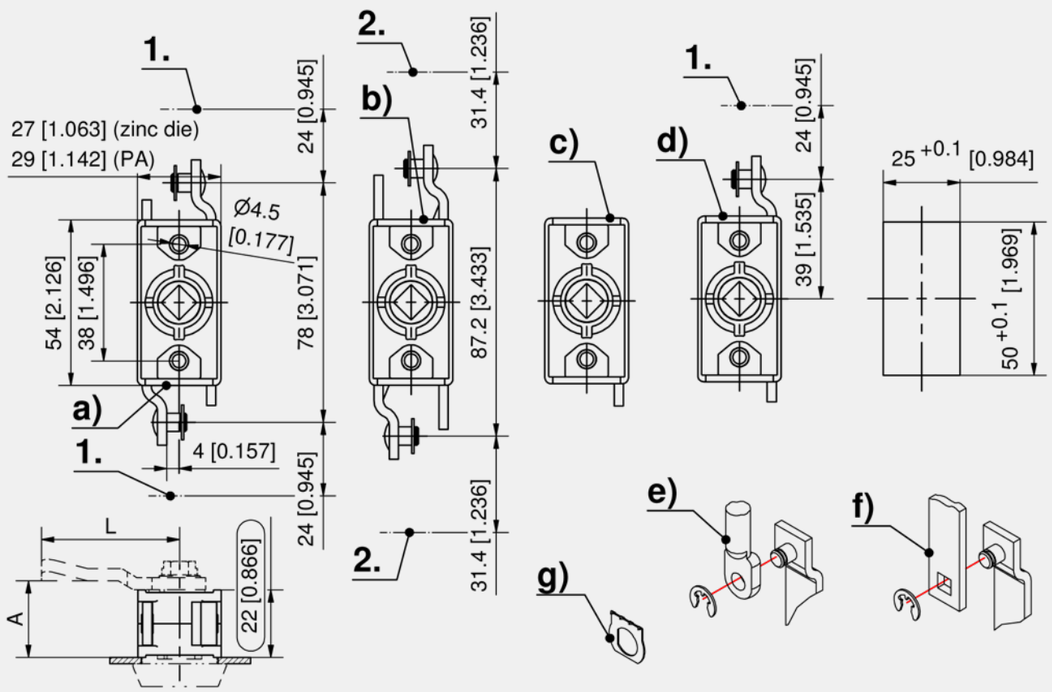

Formula for rods:
cutout in the door center

$$L = \frac{\text{clearance - 10mm [0.394] (tolerance) - Rod Latch System in retraced condition}}{2}$$

3-100

all product details
on DIRAK.com

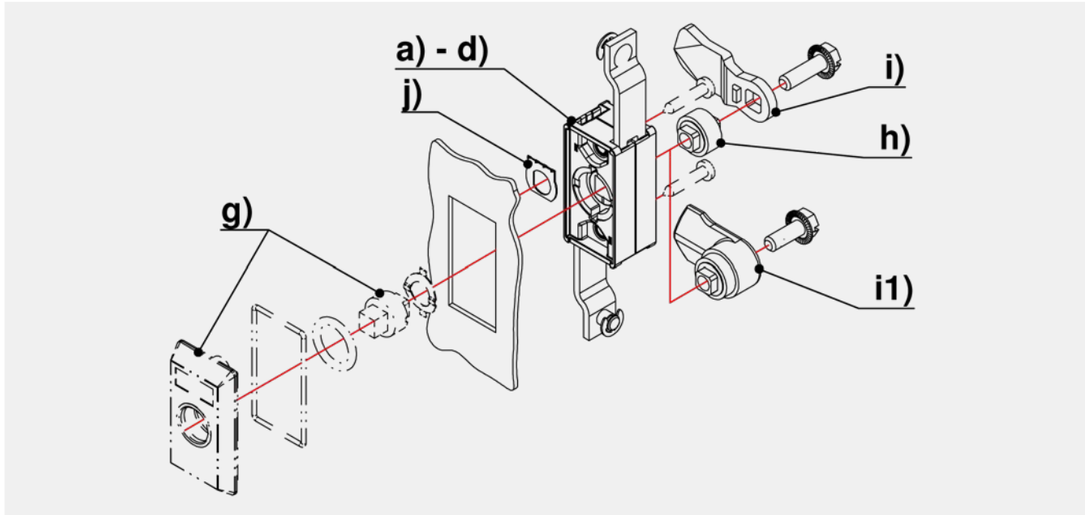

Rod latch, zinc die, untreated

	Part Number	Pivoting range	Version	Stroke	Installation type	Delivery Unit
a)	208-9001.00-00000	135°	for inserts	24 mm	screw-on	1 pc.
b)	208-9008.00-00000	180°	for inserts	31.4 mm	screw-on	1 pc.
c)	208-9013.00-00000	135°	for inserts, without rod		screw-on	1 pc.
d)	208-9014.00-00000	135°	for inserts, with one rod	24 mm	screw-on	1 pc.

Rod latch, PA, black

	Part Number	Pivoting range	Version	Stroke	Installation type	Delivery Unit
a)	208-9051.00-00000	135°	for inserts	24 mm	screw-on	1 pc.
b)	208-9058.00-00000	180°	for inserts	31.4 mm	screw-on	1 pc.
c)	208-9063.00-00000	135°	for inserts, without rod		screw-on	1 pc.
d)	208-9064.00-00000	135°	for inserts, with one rod	24 mm	screw-on	1 pc.

	Accessories
e)	180, 284 1-180 **Round Rods for Adapter**
e)	179, 283 201-0102.00-00000 **Round rod 400mm**
e)	179, 283 201-0103.00-00000 **Round rod 500mm**
e)	179, 283 201-0104.00-00000 **Round rod 600mm**
e)	179, 283 201-0105.00-00000 **Round rod 700mm**
e)	179, 283 201-0106.00-00000 **Round rod 800mm**
e)	179, 283 201-0107.00-00000 **Round rod 900mm**
e)	179, 283 201-0108.00-00000 **Round rod 1000mm**
e)	179, 283 201-0109.00-00000 **Round rod 1100mm**
e)	179, 283 201-0110.00-00000 **Round rod 1200mm**
e)	179, 283 201-0111.00-Lxxmm **Round rod, variable length**
e)	179, 283 201-0112.00-Lxxmm **Round rod, variable length**
e)	179, 283 201-9021.00-Lxxmm **Round rod, variable length**
f)	368 3-161 **Flat Rod FS**
g)	318 3-101 **Escutcheons and Inserts**
g)	324 3-110 **Handles for Rod Latch FS PrA**
g)	320 3-135 **Escutcheon for Rod Latch PrA**
h)	375 3-163 **Cam Adapter Zinc Die**
i)	154, 292 1-102 **Cams L35/45 Steel**
i1)	374 208-9401.00-00000 **Cam with square, A25, L30 with serrated screw M6x16**
i1)	374 208-9402.00-00000 **Cam with square, A20, L40 with serrated screw M6x16**
i1)	374 208-9404.00-00000 **Cam with square, A18, L40 with serrated screw M6x16**
i1)	374 208-9408.00-00000 **Cam with square, A30, L30 with serrated screw M6x16**
j)	302, 366 3-011 **Grounding Clip Stainless Steel**

Rod Latch RS/FS PrA Stainless Steel

[7-030]

A

R L

IP 65

RoHS WEEE

Advantages

- For cutout A.
- The latch can be used with escutcheon, handles or swinghandle.
- Installation with or without cam.
- For application within the sealed area.
- Can also be used outside the seal in edge area.
- RH / LH application through double symmetry.
- Grounding by grounding clip (optional).

Materials

- **Rod latch:** AISI 316
- **Adapter:** AISI 303

Remarks

1. stroke 24mm

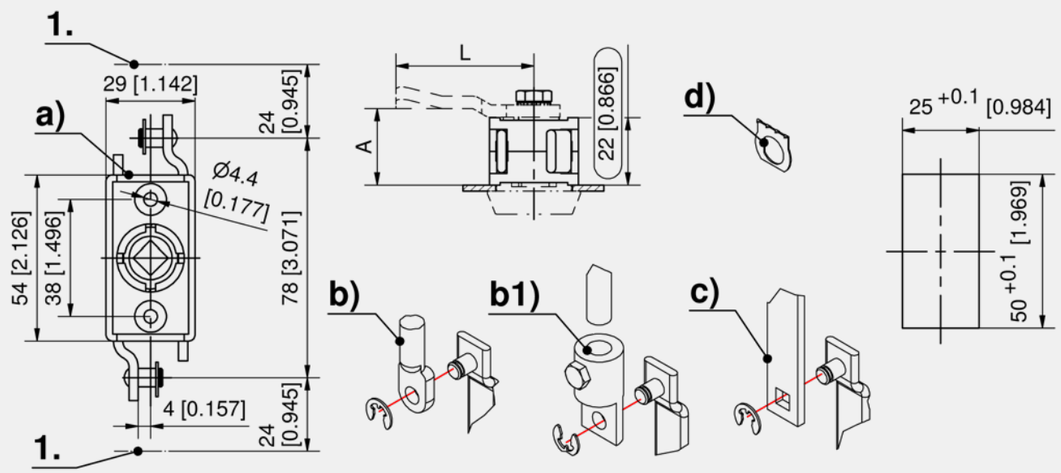

Formula for rods:
cutout in the door center

$$L = \frac{\text{clearance - 10mm [0.394] (tolerance) - Rod Latch System in retraced condition}}{2}$$

7-030

all product details on DIRAK.com

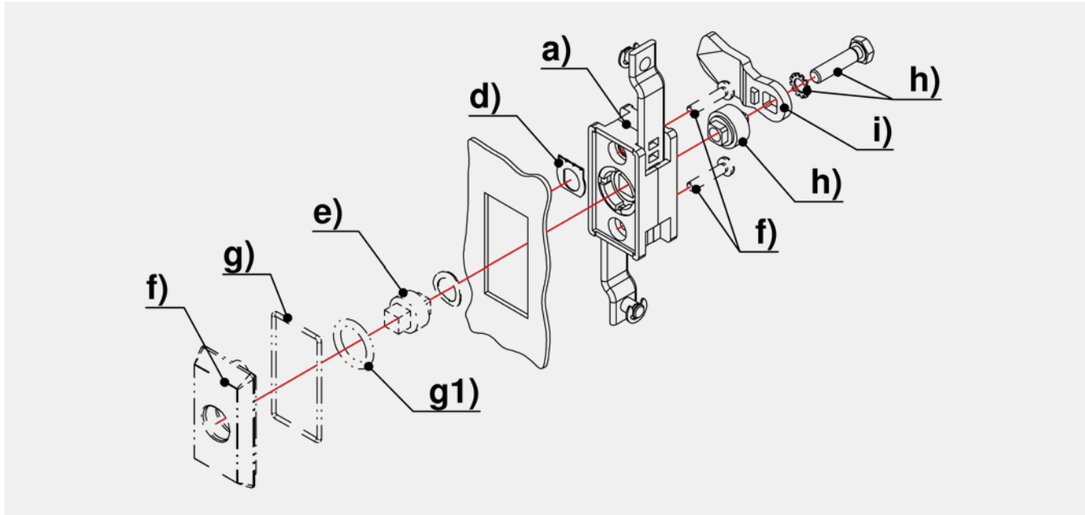

Rod latch

	Part Number	Rod fastening	Installation type	Delivery Unit
a)	208-9025.00-00000	C-clip	screw-on	1 pc.

	Accessories
b)	182, 286 7-106 **Round Rods Stainless Steel**
b1)	183, 287 200-9603.00-00000 **Adapter for Round Rods Ø8mm Stainless Steel**
c)	369 7-070 **Flat Rods FS Stainless Steel**
d)	302, 366 3-011 **Grounding Clip Stainless Steel**
e)	152 7-082 **Insert Stainless Steel Pr20.1**
f)	322 7-034 **Lock Cover and Inserts PrA / PrC Stainless Steel**
f)	325 7-035 **T- and L-Handle Stainless Steel**
g1)	208-1801.00-00000 **O-ring 16 x 3.0mm**
g)	208-1802.00-00000 **O-ring 39.45 x 1.78mm**
h)	376 208-9406.00-00000 **Cam adapter with hex. head screw M6x25 + serrated lock washer**
i)	156 7-105 **Cams L35/45 Stainless Steel**

Rod Latch FS PrB

[3-075]

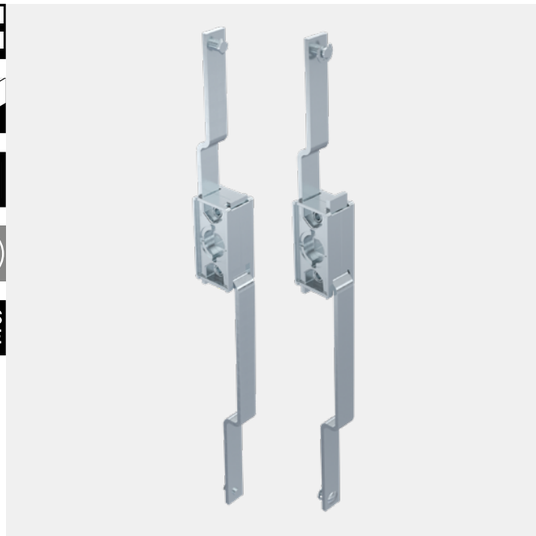

Advantages

- For cutout B.
- For application within the sealed area.
- The latch can be combined with escutcheons or swing-handles.
- RH / LH application through double symmetry.
- Grounding by grounding clip (optional).

Materials

- **Housing:** zinc die, untreated
- **Pinion:** sintered metal
- **Rods:** steel, zinc plated

Remarks

1. stroke 24mm
2. length L
3. clearance

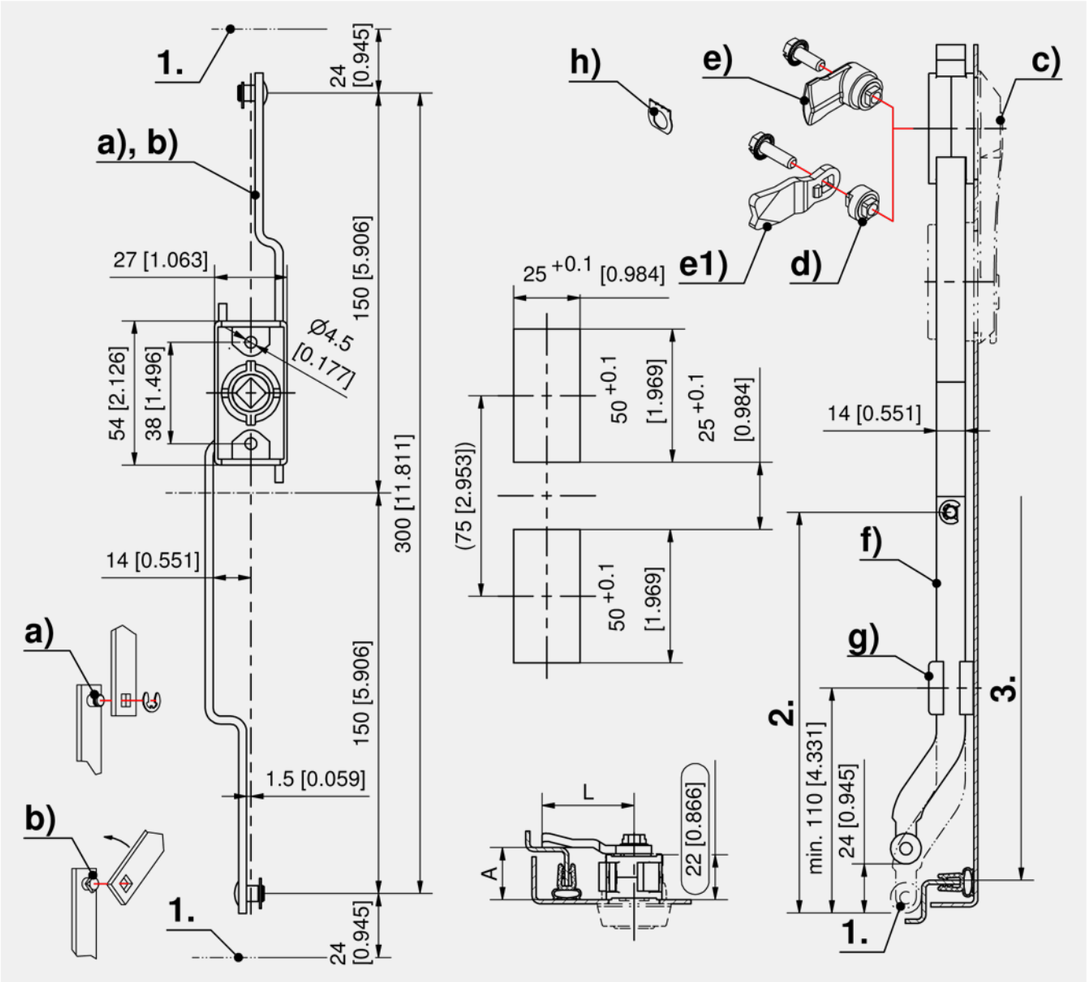

3-075

all product details on DIRAK.com

Formula for rods:
cutout in the door center

$$L\ 2. = \frac{\text{clearance 3. - 10mm [0.394] (tolerance) - Rod Latch System in retraced condition 300mm [11.811]}}{2}$$

Rod latch

	Part Number	Rod fastening	Installation type	Delivery Unit
a)	208-9021.00-00000	C-clip	screw-on	1 pc.
b)	208-9022.00-00000	quick-fit	screw-on	1 pc.

	Accessories
c)	328 3-070 **Swinghandle FS PrB**
c)	318 3-101 **Escutcheons and Inserts**
c)	320 3-135 **Escutcheon for Rod Latch PrA**
c)	321 3-136 **Cutout-Cover PrA / PrB / PrC**
d)	375 3-163 **Cam Adapter Zinc Die**
e)	374 208-9401.00-00000 **Cam with square, A25, L30 with serrated screw M6x16**
	374 208-9402.00-00000 **Cam with square, A20, L40 with serrated screw M6x16**
e)	375 208-9403.00-00000 **Cam adapter with serrated screw M6x20**
e)	374 208-9404.00-00000 **Cam with square, A18, L40 with serrated screw M6x16**
e)	374 208-9408.00-00000 **Cam with square, A30, L30 with serrated screw M6x16**
e1)	154, 292 1-102 **Cams L35/45 Steel**
f)	367 3-160 **Flat Rod FS with Rollers**
g)	378 3-910 **Rod Guide FS 23mm**
g)	379 3-911 **Rod Guide FS 23mm**
h)	302, 366 3-011 **Grounding Clip Stainless Steel**

Rod Latch RS PrB

[3-132.01]

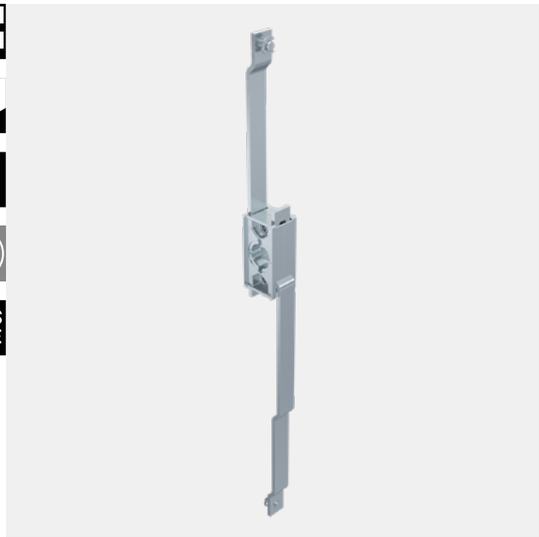

Advantages

- For cutout B.
- For application within the sealed area.
- Can be equipped with escutcheon or swinghandle.
- RH / LH application through double symmetry.
- In this configuration both round rods have the same length.
- The 4 weld-studs for the rod guides are positioned exactly in the line with the center of the latch system.
- Grounding by grounding clip (optional).

Materials

- **Rod latch:** zinc die, untreated / steel, zinc plated

Remarks

1. stroke 24mm
2. length L
3. clearance

Both flat rods of the rod latch have to be used with rod guides (e).

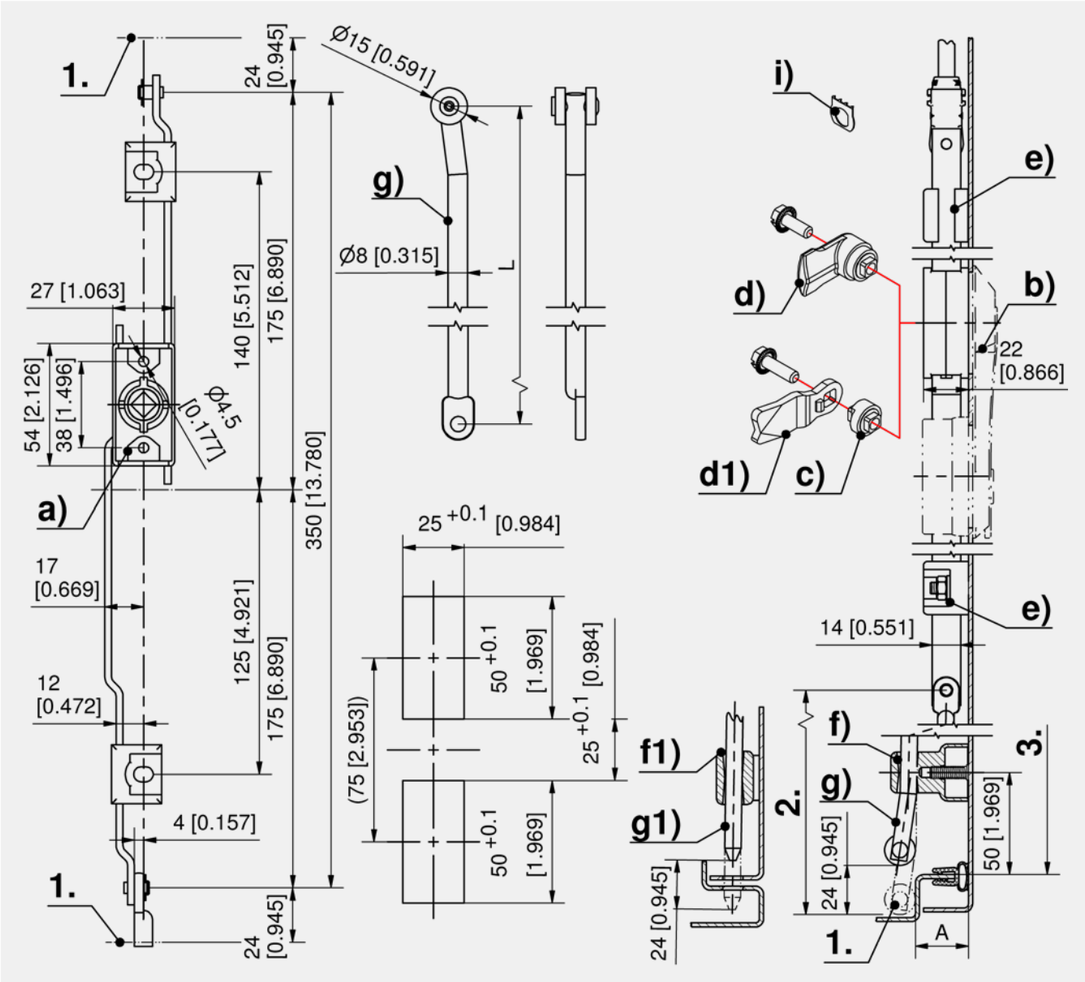

3-132.01

all product details on DIRAK.com

Formula for rods:
cutout in the door center

$$L\ 2. = \frac{\text{clearance 3. - 10mm [0.394] (tolerance) - Rod Latch System in retraced condition 350mm [13.780]}}{2}$$

Rod latch

	Part Number	Rod fastening	Installation type	Delivery Unit
a)	208-9016.00-00000	C-clip	screw-on	1 pc.

	Accessories
b)	328 3-070 **Swinghandle FS PrB**
b)	320 3-135 **Escutcheon for Rod Latch PrA**
b)	321 3-136 **Cutout-Cover PrA / PrB / PrC**
c)	375 3-163 **Cam Adapter Zinc Die**
d)	374 208-9401.00-00000 **Cam with square, A25, L30 with serrated screw M6x16**
d)	374 208-9402.00-00000 **Cam with square, A20, L40 with serrated screw M6x16**
d)	374 208-9404.00-00000 **Cam with square, A18, L40 with serrated screw M6x16**
d)	374 208-9408.00-00000 **Cam with square, A30, L30 with serrated screw M6x16**
d1)	154, 292 1-102 **Cams L35/45 Steel**
e)	378 3-910 **Rod Guide FS 23mm**
f)	186, 290 1-190 **Rod Guides RS**
f)	187, 291 1-193 **Rod Guide RS**
f1)	185, 289 1-192 **Rod Guides RS**
g)	179, 283 201-9021.00-Lxxmm **Round rod, variable length, with eye parallel to the roller**
g1)	179, 283 201-0111.00-Lxxmm **Round rod, variable length**
i)	302, 366 3-011 **Grounding Clip Stainless Steel**

Rod Latch FS PrC

[3-130]

C

R L

IP 65

RoHS WEEE

Advantages

- For cutout C.
- For application within the sealed area.
- The latch can be combined with escutcheon, handles or swinghandl.
- RH / LH application through double symmetry.
- Grounding by grounding clip (optional).

Materials

- **Housing:** zinc die, untreated or PA, black
- **Pinion:** zinc die
- **Rods:** steel, zinc plated

Remarks

1. stroke 24mm
2. length L
3. clearance

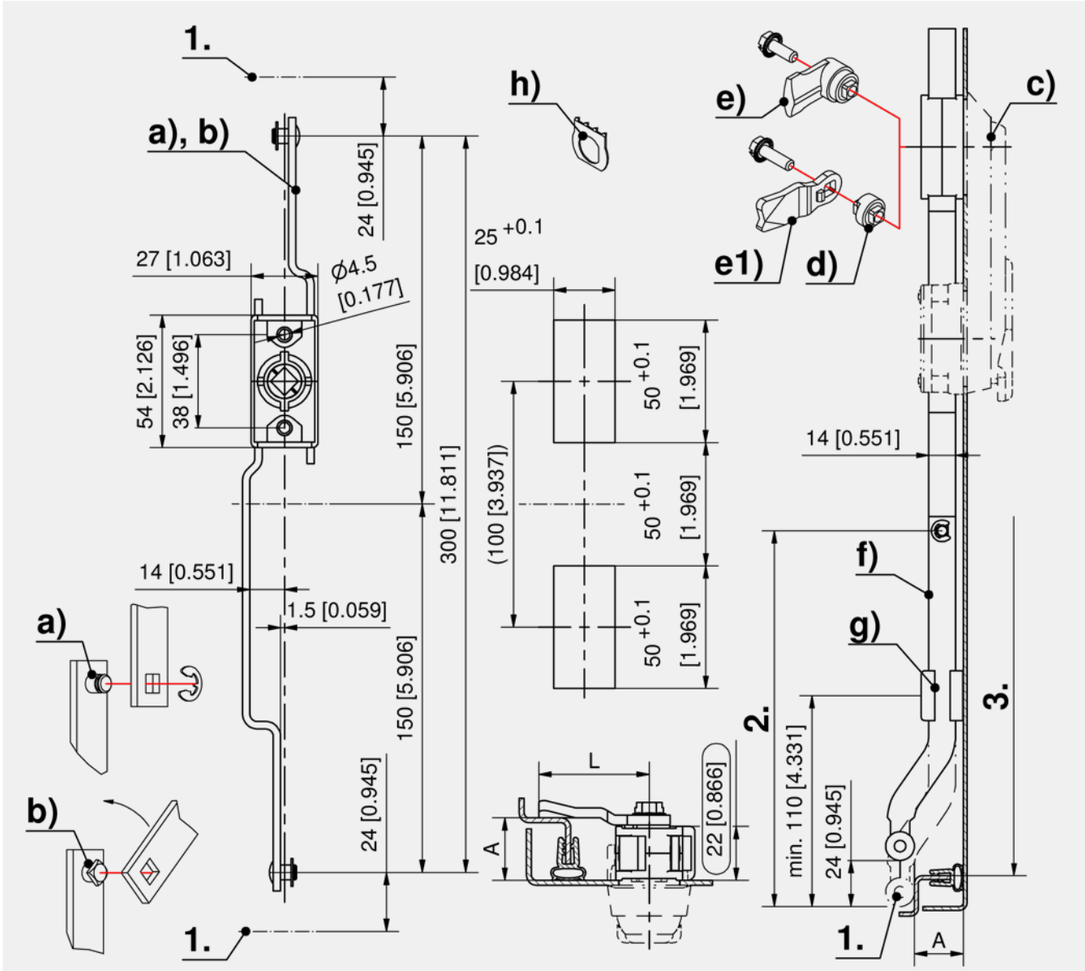

Formula for rods:
cutout in the door center

$$L\ \mathbf{2.} = \frac{\text{clearance}\ \mathbf{3.} - 10\text{mm [0.394] (tolerance)} - \text{Rod Latch System in retraced condition 300mm [11.811]}}{2\ [0.079]}$$

Rod latch

	Part Number	Material	Rod fastening	Installation type	Delivery Unit
a)	208-9002.00-00000	zinc die	C-clip	screw-on	1 pc.
a)	208-9052.00-00000	PA	C-clip	screw-on	1 pc.
b)	208-9003.00-00000	zinc die	quick-fit	screw-on	1 pc.
b)	208-9053.00-00000	PA	quick-fit	screw-on	1 pc.

	Accessories
c)	318 3-101 **Escutcheons and Inserts**
c)	320 3-135 **Escutcheon for Rod Latch PrA**
c)	330 3-140 **Handles for Rod Latch FS PrC**
c)	334 3-150 **Swinghandle FS PrC for PHZ**
c)	333 3-155.02 **Swinghandle SOFTLINE FS PrC**
d)	375 3-163 **Cam Adapter Zinc Die**
e)	374 208-9401.00-00000 **Cam with square, A25, L30 with serrated screw M6x16**
e)	374 208-9402.00-00000 **Cam with square, A20, L40 with serrated screw M6x16**
e)	374 208-9404.00-00000 **Cam with square, A18, L40 with serrated screw M6x16**
e)	374 208-9408.00-00000 **Cam with square, A30, L30 with serrated screw M6x16**
e1)	154, 292 1-102 **Cams L35/45 Steel**
f)	367 3-160 **Flat Rod FS with Rollers**
f)	370 3-162 **Ramp-Shoe for Flat Rod**
g)	378 3-910 **Rod Guide FS 23mm**
g)	379 3-911 **Rod Guide FS 23mm**
h)	302, 366 3-011 **Grounding Clip Stainless Steel**

Multi-Point Systems
Accessories

3-130
all product details on DIRAK.com

Rod Latch FS PrC Stainless Steel

[7-040]

Advantages

- For cutout C.
- For application within the sealed area.
- The latch can be used with escutcheon, handles or swinghandle.
- RH / LH application through double symmetry.
- Grounding by grounding clip (optional).

Materials

- **Housing:** AISI 316
- **Rods:** AISI 304

Remarks

1. stroke 24mm
2. length L
3. clearance

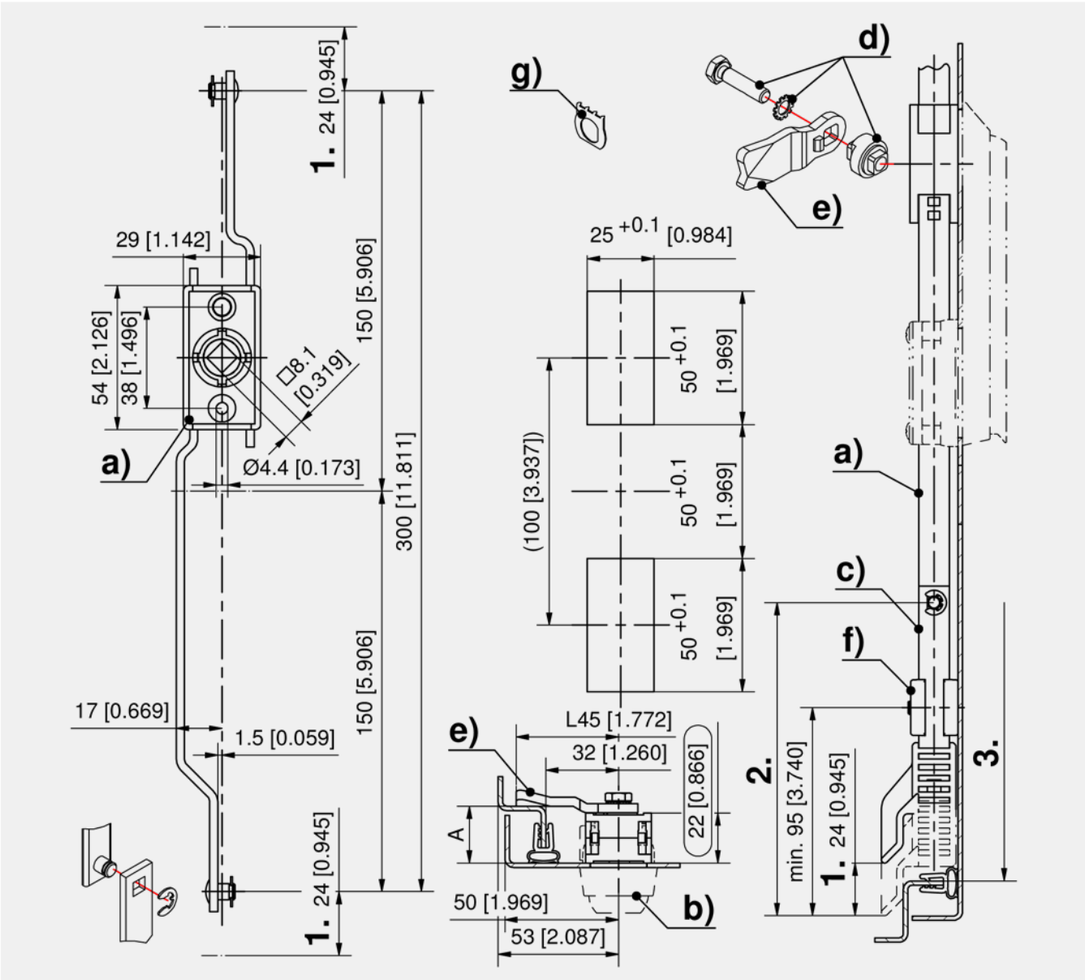

7-040

all product details
on DIRAK.com

Formula for flat rods:
cutout in the door center

$$L\ \mathbf{2.} = \frac{\mathbf{3.}\ \text{clearance of the cabinet} - 10\text{mm}[0.394]\ \text{(tolerance)} - \text{rod latch system } 300\text{mm}\ [11.811]}{2[0.079]}$$

Rod latch

	Part Number	Rod fastening	Installation type	Delivery Unit
a)	208-9024.00-00000	C-clip	screw-on	1 pc.

	Accessories
b) 322	7-034 **Lock Cover and Inserts PrA / PrC Stainless Steel**
b) 344	7-060 **Swinghandle FS PrC Stainless Steel for PHZ**
b) 345	7-061 **NT Swinghandle FS PrC Stainless Steel for PHZ**
c) 369	7-070 **Flat Rods FS Stainless Steel**
d) 376	7-041 **Cam Adapter Stainless Steel**
e) 156	7-105 **Cams L35/45 Stainless Steel**
f) 378	208-1501.03-00000 **Rod guide PA , 1-part**
f) 378	208-9790.00-00000 **Rod guide stainless steel, 2-parts**
f) 379	3-911 **Rod Guide FS 23mm**
g) 302, 366	3-011 **Grounding Clip Stainless Steel**

Rod Latch RS PrC

[3-132.02]

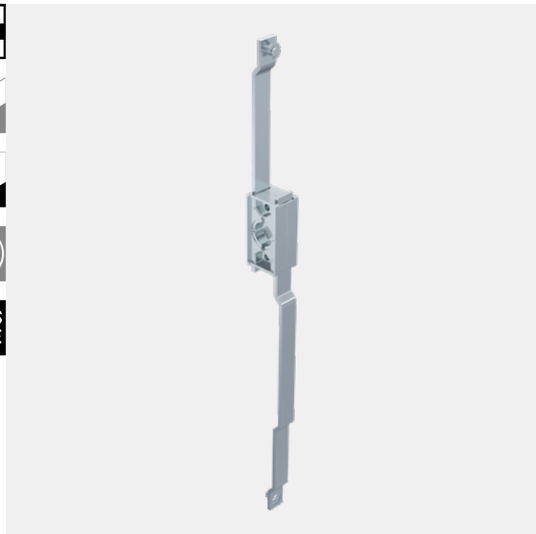

Advantages

- For cutout C.
- In this configuration both round rods have the same length.
- The 4 weld-studs for the rod guides version e) and f) are positioned exactly in the line with the center of the latch.
- RH / LH application through double symmetry.
- Grounding by grounding clip (optional).

Materials

- **Rod latch:** zinc die, untreated / steel, zinc plated

Remarks

1. stroke 24mm
2. length L
3. clearance

Both flat rods of the rod latch have to be used with rod guides (e).

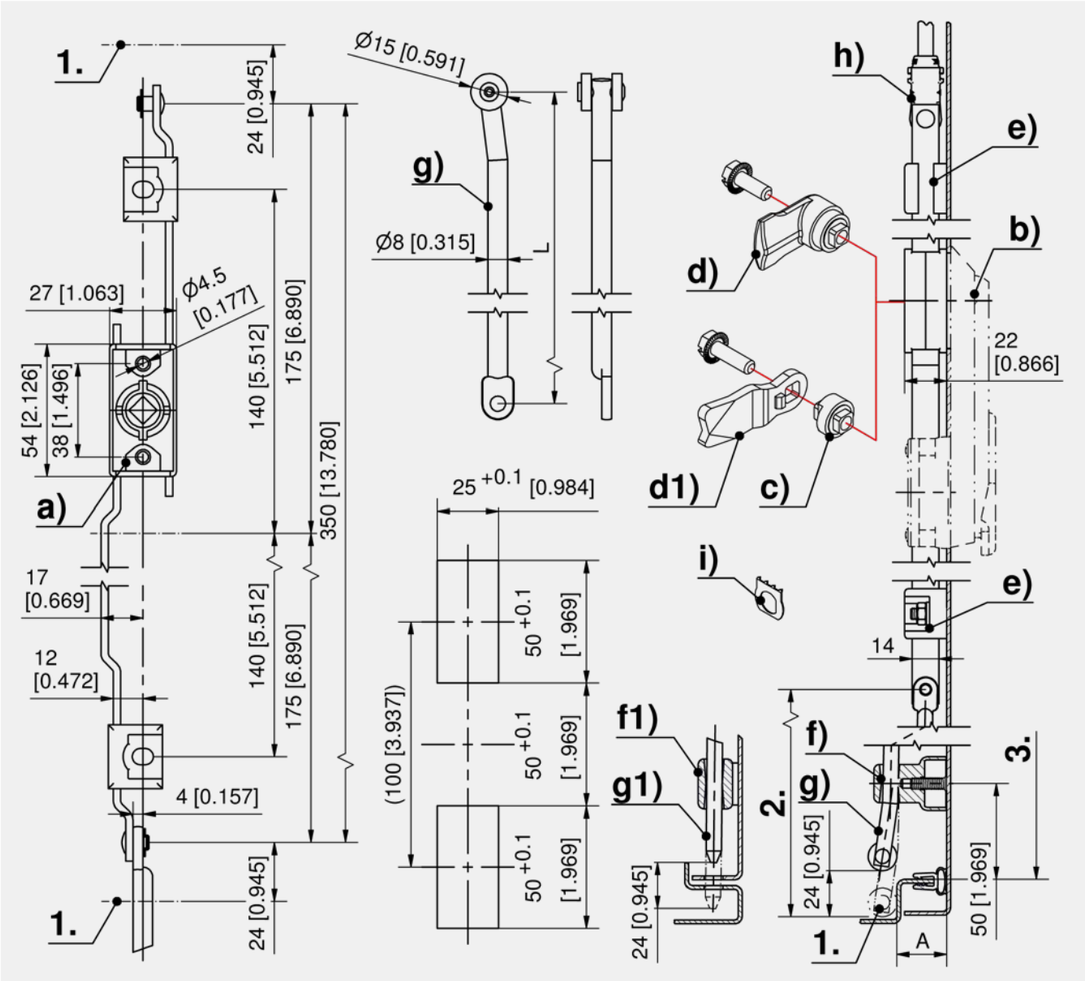

3-132.02

all product details
on DIRAK.com

Formula for rods:
cutout in the door center

$$L\ 2. = \frac{\text{clearance 3. - 10mm [0.394] (tolerance) - Rod Latch System in retraced condition 350mm [13.780]}}{2}$$

Rod latch

	Part Number	Rod fastening	Installation type	Delivery Unit
a)	208-9015.00-00000	C-clip	screw-on	1 pc.

	Accessories
b)	318 3-101 **Escutcheons and Inserts**
b)	330 3-140 **Handles for Rod Latch FS PrC**
b)	334 3-150 **Swinghandle FS PrC for PHZ**
c)	375 3-163 **Cam Adapter Zinc Die**
d)	374 208-9401.00-00000 **Cam with square, A25, L30 with serrated screw M6x16**
d)	374 208-9402.00-00000 **Cam with square, A20, L40 with serrated screw M6x16**
d)	374 208-9404.00-00000 **Cam with square, A18, L40 with serrated screw M6x16**
d)	374 208-9408.00-00000 **Cam with square, A30, L30 with serrated screw M6x16**
d1)	154, 292 1-102 **Cams L35/45 Steel**
e)	378 3-910 **Rod Guide FS 23mm**
f)	186, 290 1-190 **Rod Guides RS**
g)	179, 283 201-9021.00-Lxxmm **Round rod, variable length, with eye parallel to the roller**
g1)	179, 283 1-170 **Round Rods with Eye**
g1)	180, 284 1-180 **Round Rods for Adapter**
h)	181, 285 1-181 **Adapter for Round Rods Ø8mm PA**
h)	181, 285 1-181.01 **Adapter for Round Rods Ø8mm / Ø10mm Zinc Die**
i)	302, 366 3-011 **Grounding Clip Stainless Steel**

Grounding Clip Stainless Steel

[3-011]

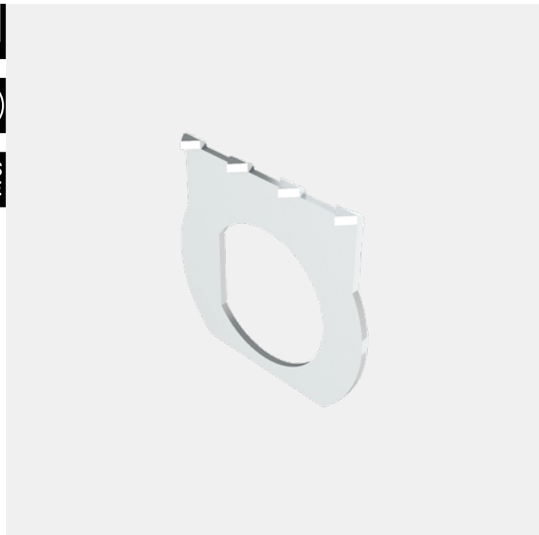

Advantages

- Grounding clip for rod latch system and bearing plate.
- Tested by the VDE testing and certification Institute in Offenbach. Passed all tests according to DIN (VDE 0100 part 540): 2012-06 as well as DIN EN 61439-1 (VDE 0660 part 600): 2012-06 section 8.4.3.2.2 and 10.5.2.
- Anodized and powder coated (epoxy and polyester) panels were tested with a thickness of up to 240µm.

Materials

- **Grounding clip:** AISI 301

Remarks

1. back of the latching devices
2. flat rod latch
3. bearing, cam / 3-point cam
4. clamping torque 2 Nm

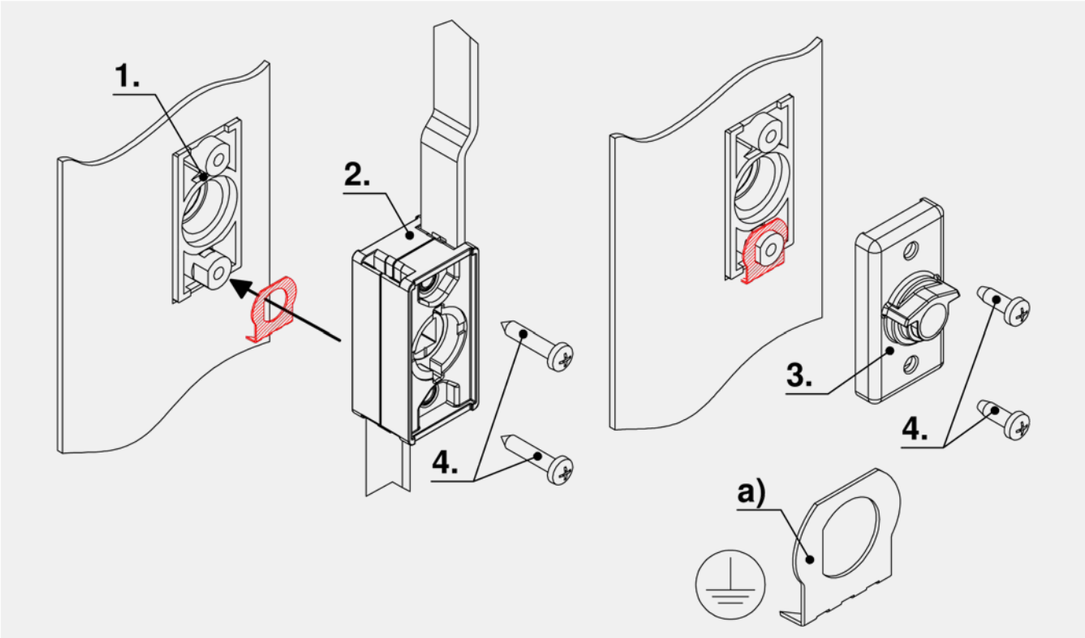

Grounding

	Part Number	Delivery Unit
a)	208-1206.93-00000	1 pc.

all product details on DIRAK.com
3-011

Flat Rod FS with Rollers

[3-160]

Advantages

- Flat Rods for bending A20 and A25.

Materials

- **Flat rod:** steel, zinc plated
- **Roller:** PA, black

Remarks

DIRAK recommends 2 rod guides for rods with length greater than 200mm.

Version with ramp shoe see product system 3-161.

1. lenght L

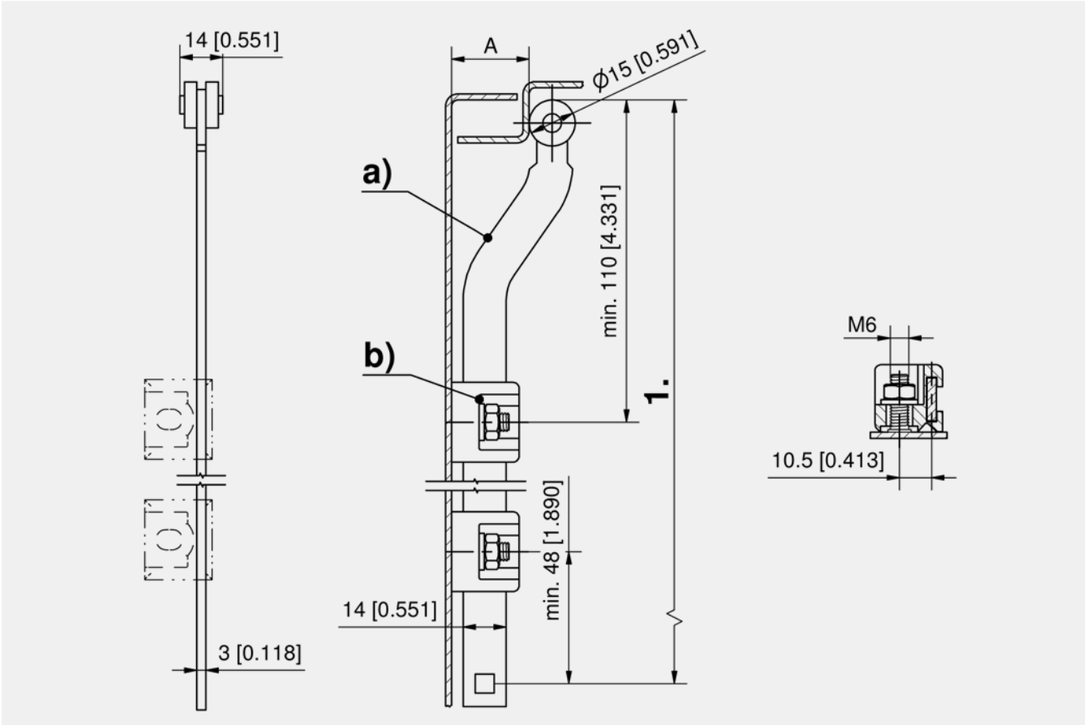

Flat rods, adjustable length

	Part Number	A = bending	Rod dimension WxH	Delivery Unit
a)	208-9733.00-Lxxmm	20	14 x 3 mm	on request
a)	208-9701.00-Lxxmm	25	14 x 3 mm	on request

	Accessories
b)	378 3-910 **Rod Guide FS 23mm**
b)	379 3-911 **Rod Guide FS 23mm**

all product details on DIRAK.com
3-160

Flat Rod FS

[3-161]

RoHS WEEE

Advantages

- Flat rods for ramp-shoe 3-162.
- **Version a)** with two square holes 6.2mm.
- Calculation of the rod length: L1 = center of square to center of square.
- **Version b)** With one square hole 6.2mm for self cutting. These flat rods are specially designed to allow for custom length rods.
- Calculation of the rod length: L1 = center of square to end of rod.
- The top of the flat rod can be provided with a square 6.2mm or a round Ø7.5mm hole as shown in figure.

Materials

- **Flat rod:** steel, zinc plated

Remarks

Dimension x - see product system 3-162

Version with rod guides see product system 3-160.

DIRAK recommends **2** rod guides for rods with length greater than 200mm.

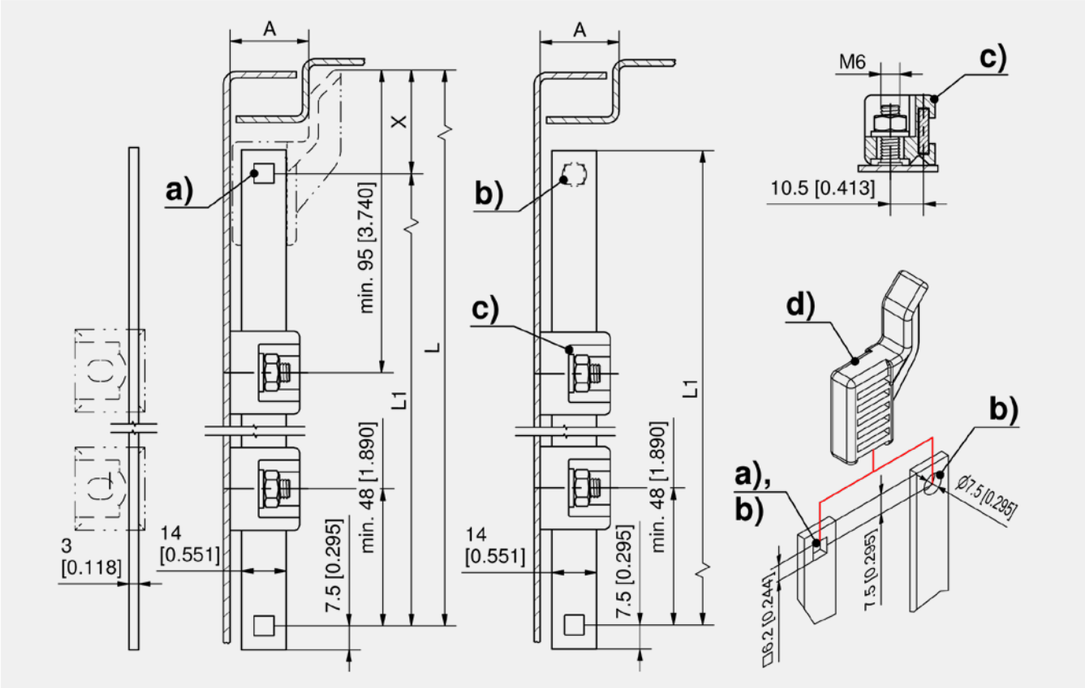

Flat rods 14 x 3mm

	Part Number	Square hole	L	Delivery Unit
a)	208-0934.00-Lxxmm	2x 6.2mm		on request
b)	208-0905.15-Lxxmm	1x 6.2mm		on request
b)	208-0905.15-00800	1x 6.2mm	800 mm	1 pc.
b)	208-0905.15-01000	1x 6.2mm	1000 mm	1 pc.
b)	208-0905.15-01200	1x 6.2mm	1200 mm	1 pc.

Accessories

c) 378 3-910 **Rod Guide FS 23mm**
c) 379 3-911 **Rod Guide FS 23mm**
d) 370 3-162 **Ramp-Shoe for Flat Rod**

Assembly options

208-0014.00-00000 **Assembling of ramp-shoe**

3-161

◂ all product details on DIRAK.com

Flat Rods FS Stainless Steel

[7-070]

RoHS WEEE

Advantages

- Flat rods for ramp-shoe 3-162.
- **Version a)** With two square holes 6.2mm.
- Calculation of the rod length: L1 = center of square to center of square.
- **Version b)** With one square hole 6.2mm for self cutting. These flat rods are specially designed to allow for custom length rods.
- Calculation of the rod length: L1 = center of square to end of rod.
- The top of the flat rod can be provided with a square 6.2mm or a round Ø7.5mm hole as shown in figure.

Materials

- **Flat rod:** AISI 304

Remarks

1. stroke

dimension x - see product system 3-162

DIRAK recommends **2** rod guides for rods with length greater than 200mm.

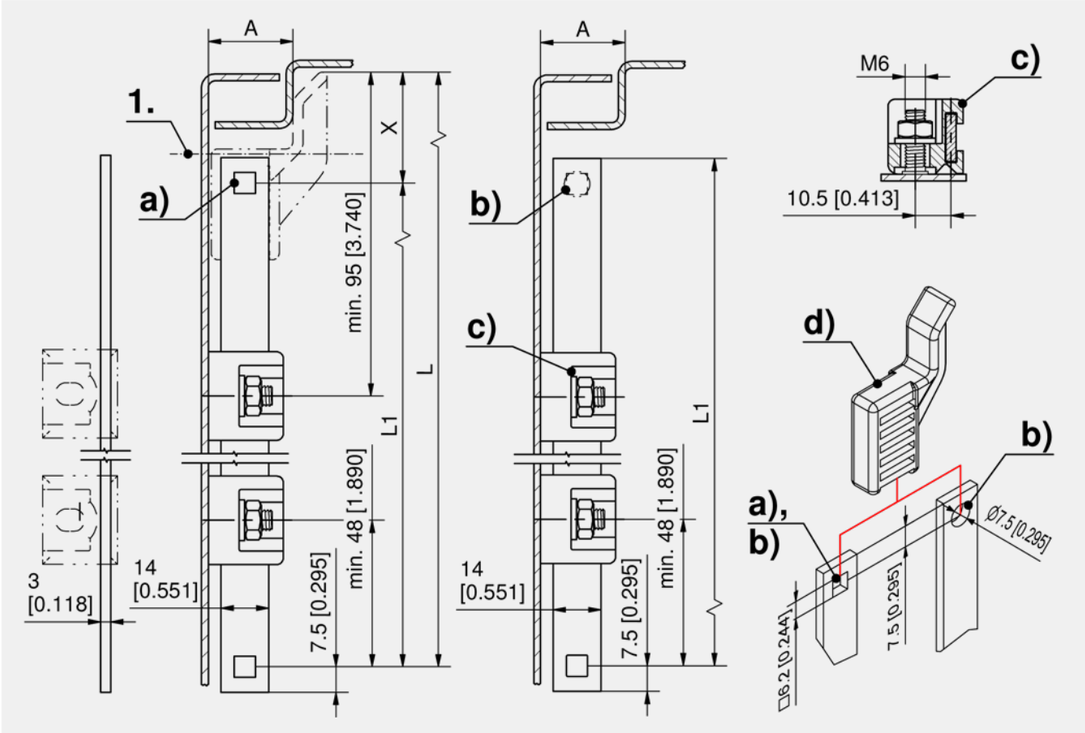

Flat rods 14 x 3mm

	Part Number	Square hole	Length	Delivery Unit
a)	208-0934.04-Lxxmm	2x 6.2mm		on request
b)	208-0905.04-Lxxmm	1x 6.2mm		on request
b)	208-0905.04-01000	1x 6.2mm	1000 mm	1 pc.

Accessories

c) 378 3-910 **Rod Guide FS 23mm**
c) 379 3-911 **Rod Guide FS 23mm**
d) 370 3-162 **Ramp-Shoe for Flat Rod**

Assembly options

208-0014.00-00000 **Assembling of ramp-shoe**

all product details ▸ on DIRAK.com

7-070

Ramp-Shoe for Flat Rod

RoHS WEEE

Advantages

- The ramp-shoe is pressed on and snaps into the retaining hole at the bottom of the rod.
- Tool-less installation.
- Opening square 6.2mm.
- Alternative bore Ø7.5mm.

Materials

- **Ramp-shoe:** PA, black

Remarks

Please note that the dimension X is to be deducted from the total length of the rod when calculating the rod length.

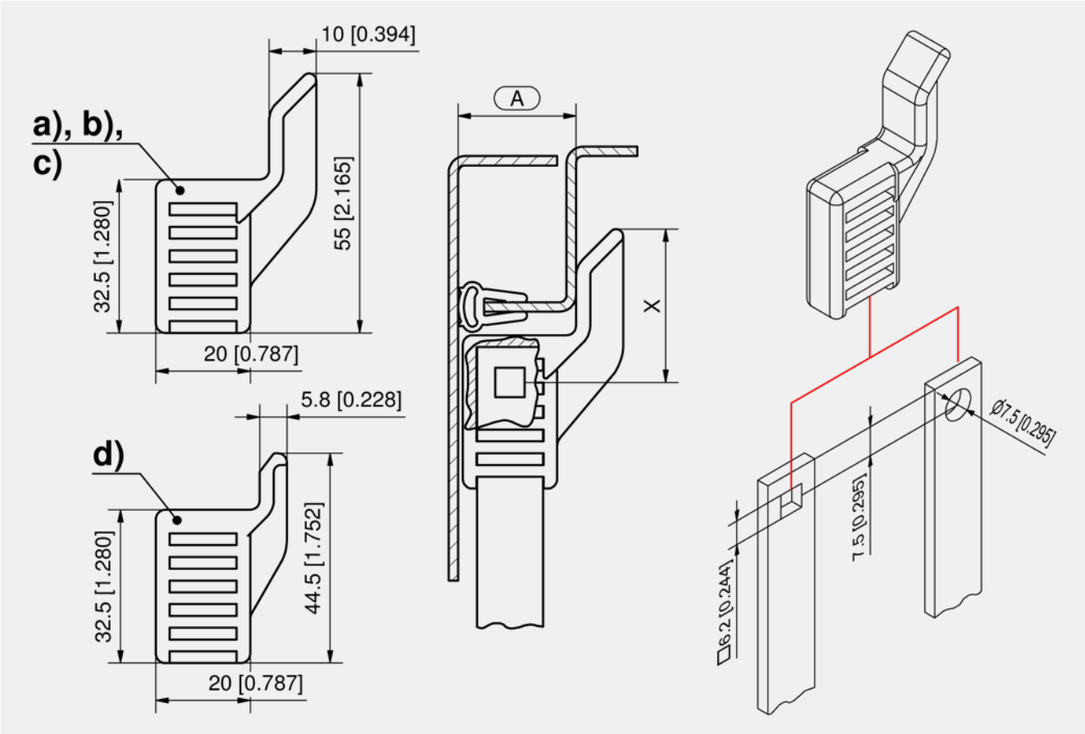

Ramp-shoe for flat rods 14 x 3mm

	Part Number	A = bending	Dimension X	Installation type	Delivery Unit
a)	208-2403.03-00018	A18	32.5 mm	tool-less	1 pc.
b)	208-2403.03-00020	A20	32.5 mm	tool-less	1 pc.
c)	208-2403.03-00025	A25	32.5 mm	tool-less	1 pc.
d)	208-2402.03-00023	A23	22 mm	tool-less	1 pc.

Assembly options
208-0014.00-00000 **Assembling of ramp-shoe**

all product details on DIRAK.com
3-162

Rod Latch FS PrC and Angle Pieces with Rollers

Advantages

- For cutout C (100).
- Rod latch with variable dimensions.
- For installation on the inside of the sealed area of enclosures.
- Applicable for bending (A) 20mm and 26mm.
- RH / LH application.

Materials

- **Rod latch:** zinc die, untreated
- **Flat rod, angle pieces, rived:** steel, zinc plated
- **Roll:** PA, black or steel, zinc plated

Remarks

1. stroke 24mm
2. clearance

Length L (extended) for symmetrical doors is calculated from length X + 30mm and length Y + 30mm.

The rod Y is 100mm longer than the rod X.

The minimum height of the enclosure for symmetrical doors is 480mm.

Attention: drawing shows rod latch extended.

RoHS WEEE

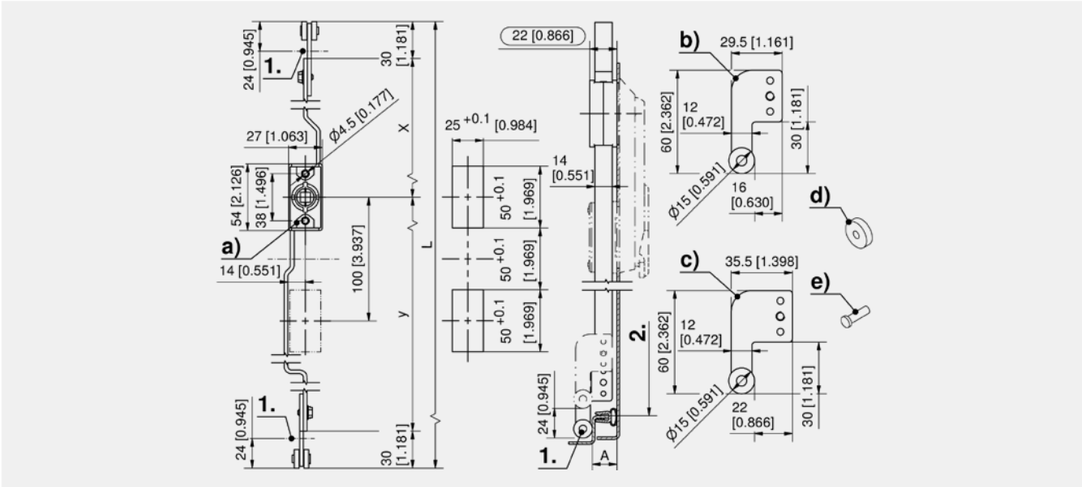

Rod latch for right-angle terminal

	Part Number	Version	Stroke	Installation type	Delivery Unit
a)	208-9715.00-Lxxmm	for inserts and swinghandles	24 mm	screw-on	on request

Right-angle terminal

	Part Number	Name	Delivery Unit
b)	208-9902.00-00020	Right-angle terminal A20	1 pc.
c)	208-9902.00-00026	Right-angle terminal A26	1 pc.

Accessories
d) 203-0301.03-00000 **Roll PA**
d) 203-0301.15-00000 **Roll steel, zinc plated**
e) 203-0402.00-00000 **Rivet**
374 208-9401.00-00000 **Cam with square, A25, L30 with serrated screw M6x16**
374 208-9402.00-00000 **Cam with square, A20, L40 with serrated screw M6x16**
374 208-9404.00-00000 **Cam with square, A18, L40 with serrated screw M6x16**
374 208-9408.00-00000 **Cam with square, A30, L30 with serrated screw M6x16**

all product details on DIRAK.com
3-165

90° Redirect FS

RoHS
WEEE

Advantages

- For multi-point locking system by corner.
- Suitable for flat rods 14x3mm.
- Quick assembly of the rods.
- RH / LH application.

Materials

- **Redirect:** zinc die, zinc plated
- **Sleeve nut:** steel, zinc plated
- **Spring plate:** AISI 304

Remarks

1. stroke 24mm

2. fastening to locking pin M6. Sleeve nut included with delivery.

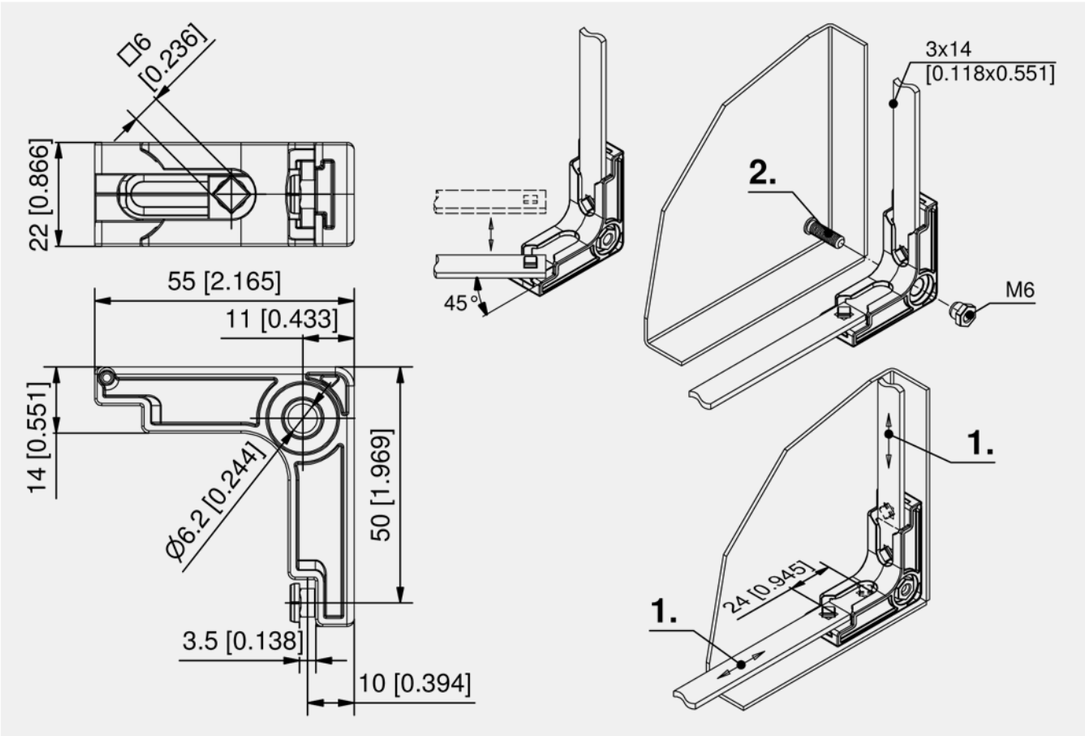

Redirect

Part Number	Installation type	Delivery Unit
208-9932.00-00000	screw-on	1 pc.

	Accessories
368	3-161 **Flat Rod FS**
382	3-171 **Flat Rod FS with Dual Rollers, variable**
378	3-910 **Rod Guide FS 23mm**
379	3-911 **Rod Guide FS 23mm**

3-166

all product details on DIRAK.com

Rod Latch FS PrC Zinc Die

See page 360

Cam for Rod Latch

[3-163.01]

RoHS WEEE

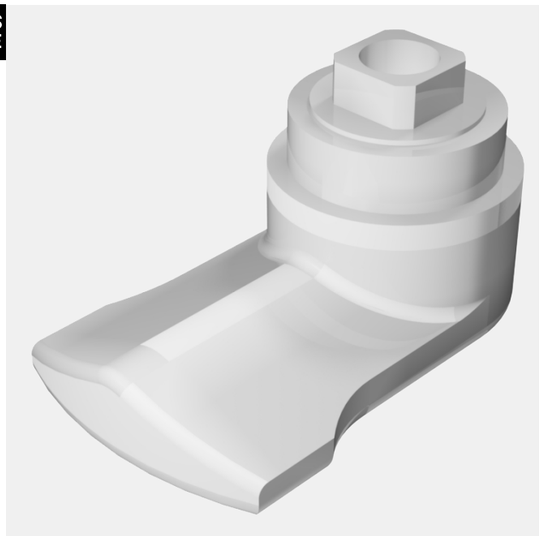

Advantages

- Cams with screw M6x16 for rod latch systems.

Materials

- **Cam:** zinc die, untreated

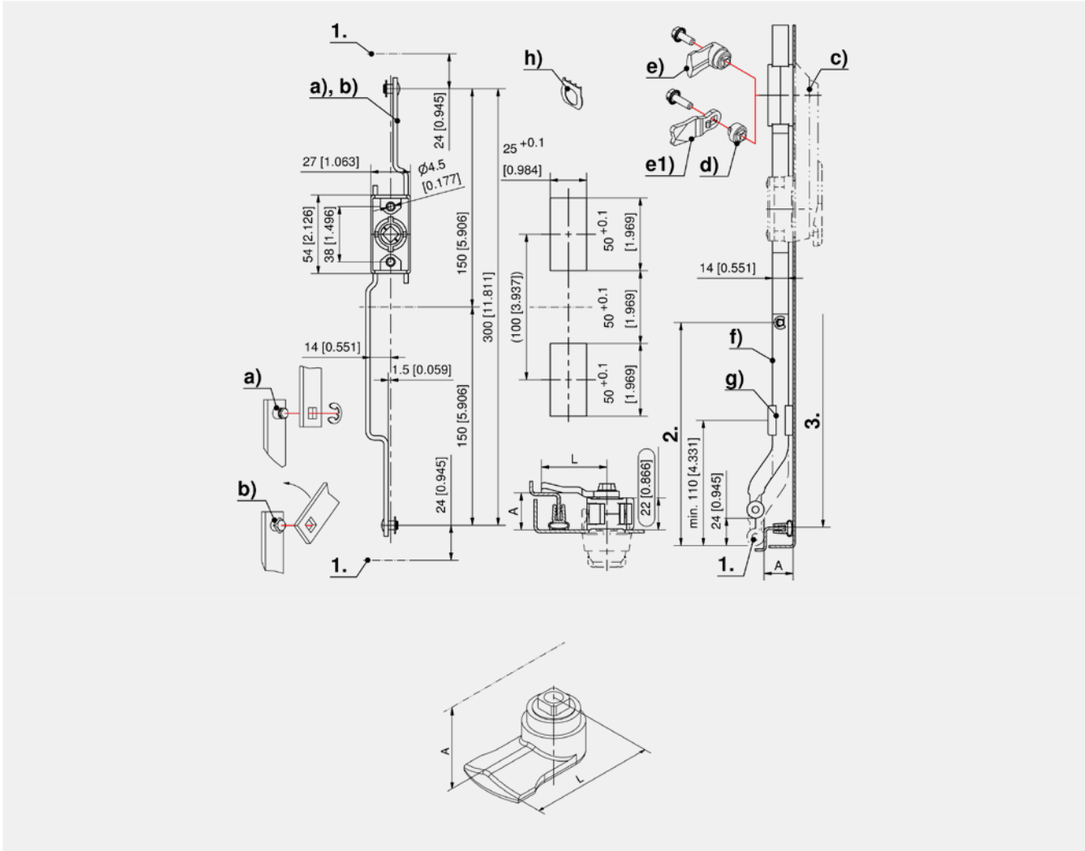

Cams

	Part Number	A	L	Delivery Unit
e)	208-9404.00-00000	18 mm	40 mm	1 pc.
e)	208-9402.00-00000	20 mm	40 mm	1 pc.
e)	208-9401.00-00000	25 mm	30 mm	1 pc.
e)	208-9408.00-00000	30 mm	30 mm	1 pc.

all product details on DIRAK.com
3-163.01

Cam Adapter Zinc Die

[3-163]

RoHS WEEE

Advantages

- Cam adapter for rod latch systems.

Materials

- **Cam adapter:** zinc die, untreated

Remarks

1. rod latch
2. escutcheon / swinghandle

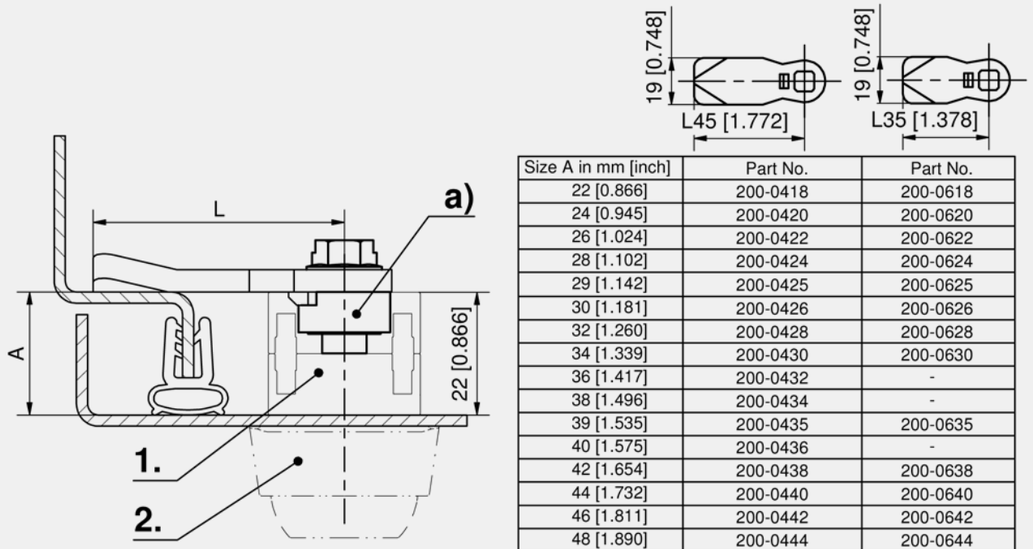

Size A in mm [inch]	Part No.	Part No.
22 [0.866]	200-0418	200-0618
24 [0.945]	200-0420	200-0620
26 [1.024]	200-0422	200-0622
28 [1.102]	200-0424	200-0624
29 [1.142]	200-0425	200-0625
30 [1.181]	200-0426	200-0626
32 [1.260]	200-0428	200-0628
34 [1.339]	200-0430	200-0630
36 [1.417]	200-0432	-
38 [1.496]	200-0434	-
39 [1.535]	200-0435	200-0635
40 [1.575]	200-0436	-
42 [1.654]	200-0438	200-0638
44 [1.732]	200-0440	200-0640
46 [1.811]	200-0442	200-0642
48 [1.890]	200-0444	200-0644
49 [1.929]	200-0445	-
51 [2.008]	200-0447	-
54 [2.126]	200-0450	-
57 [2.244]	200-0453	-
59 [2.323]	200-0455	-

Cam adapter

	Part Number	Name	suitable for product system	Delivery Unit
a)	208-9403.00-00000	Cam adapter with serrated screw M6x20	3-070/3-100/3-130/3-132.01/3-165	1 pc.
a)	208-9409.00-00000	Cam adapter with serrated screw M5x20	3-400/3-400E	1 pc.

Accessories
154, 292 1-102 **Cams L35/45 Steel**
156 7-105 **Cams L35/45 Stainless Steel**

all product details on DIRAK.com
3-163

Cam Adapter Stainless Steel

[7-041]

RoHS WEEE

Advantages

- Cam adapter for rod latch systems.
- Suitable for product systems 7-030 and 7-040.

Materials

Cam adapter: AISI 316

Remarks

1. rod latch
2. escutcheon / swinghandle

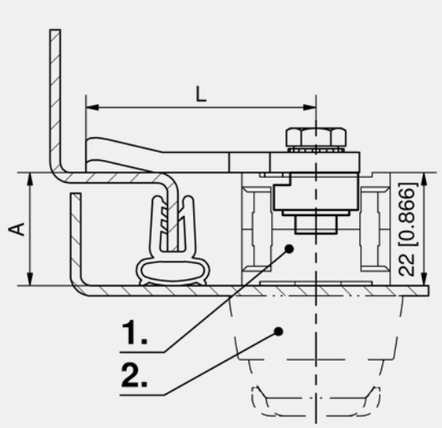

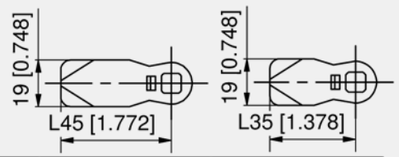

Size A in mm [inch]	Part Number	Part Number
22 [0.866]	200-0518.00-00000	200-4535.00-00018
24 [0.945]	200-0520.00-00000	200-4535.00-00020
26 [1.024]	200-0522.00-00000	200-4535.00-00022
28 [1.102]	200-0524.00-00000	-
30 [1.181]	200-0526.00-00000	-
32 [1.260]	200-0528.00-00000	-
36 [1.417]	200-0532.00-00000	-
44 [1.732]	200-0540.00-00000	-
46 [1.811]	200-0542.00-00000	-
54 [2.126]	200-0550.00-00000	-

Cam adapter

Part Number	Name	Delivery Unit
208-9406.00-00000	Cam adapter with hex. head screw M6x25 + serrated lock washer	1 pc.

Accessories
156 7-105 **Cams L35/45 Stainless Steel**

7-041
◂ all product details on DIRAK.com

Adapter Set for Swinghandle

[3-152]

Advantages

- Adapter for conversion of swinghandles for flat rods to round rods/ cam drive.
- RH / LH application.
- 90° stop.
- Use of cams, 3-point cams and 3-point cam adapter with stop.
- Overtightening of the cam/ 3-point cam not possible due to the stop.

Materials

- **Bearing plate:** PA, black
- **Adapter:** zinc die, untreated

B C R L RoHS WEEE

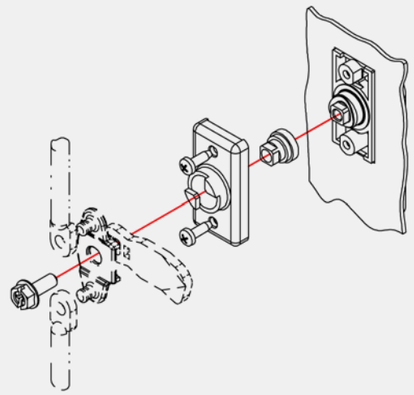

Adapter set

Part Number	2-point locking	3-point locking	Delivery Unit
207-9703.00-00000	Yes	Yes	1 pc.

Accessories
154, 292 1-102 **Cams L35/45 Steel**
175, 295 2-151 **2-, 3- and 4-Point Cam Adapter**
176, 296 2-151.04 **3-Point Cam Adapter**

all product details ▸ on DIRAK.com
3-152

Rod Guide FS 23mm

[3-910]

RoHS
WEEE

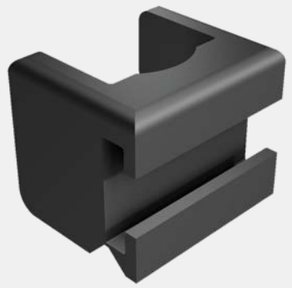

Advantages

- For flat rods 14x3mm.
- a), b) and c): rod guide with hinge for pre-assembly onto the flat rod.
- b) and c): rod guide for OFFSET-DUO SYSTEM see product system 3-310.
- d) and e): rod guide two halves.

Materials

- **Rod guide:**
  a), b) and c): PA, black
  d): AISI 316
  e): zinc die, black

Remarks

Required space inside the bend 23mm

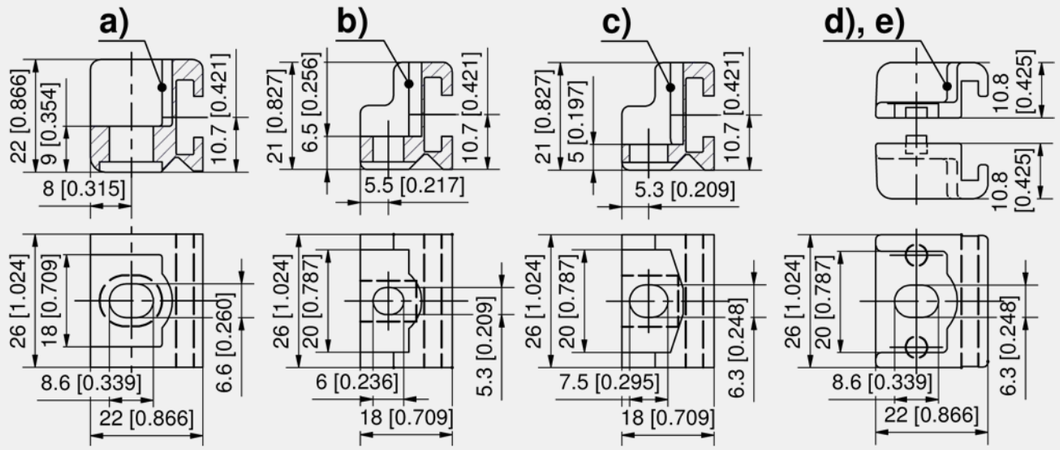

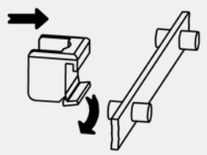

1. Open the rod guide´s living hinge downwards and position over the flat rod.

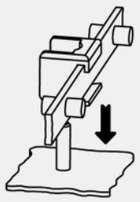

2. Assemble the flat rod guide onto the weld stud.

3. By tightening the nut the living hinge automatically and securely attaches the flat rod..

Rod guide

	Part Number	Name	Fastening type	Material	Delivery Unit
a)	208-1501.03-00000	Rod guide PA , 1-part	M6	PA	1 pc.
b)	208-1509.03-00000	Rod guide PA , 1-part	M5	PA	1 pc.
c)	208-1517.03-00000	Rod guide PA , 1-part	M6	PA	1 pc.
d)	208-9790.00-00000	Rod guide stainless steel, 2-parts	M6	stainless steel	1 pc.
e)	208-9791.00-00000	Rod guide zinc die, 2-parts	M6	zinc die	1 pc.

3-910
◂ all product details on DIRAK.com

Rod Guide FS 23mm

[3-911]

RoHS
WEEE

Advantages

- Rod guide for flat rods 14x3mm.
- Quick, tool-less installation.
- Weld-stud M6 x 16-20mm.
- The rod guide has to be placed over the weld stud (1.) and then pressed onto the thread until a click is audible. It is locked now in the final position (2.).
- A visual check through openings is possible from the top.
- The installation and removal of the flat rod is possible with the rod guides fitted already.
- Vibration-proof.

Materials

- **Rod guide:** PA
- **Pull-off forces upon request.**

Remarks

Required space inside the bend 23mm

When using this rod guide for rod latch system 3-170 the weld-stud must be moved inwards by 2mm.

3. installation of the flat rod with assembled rod guide.

4. wings are flexible.

5. after locking of the flat rod the flexible wings return to their initial position.

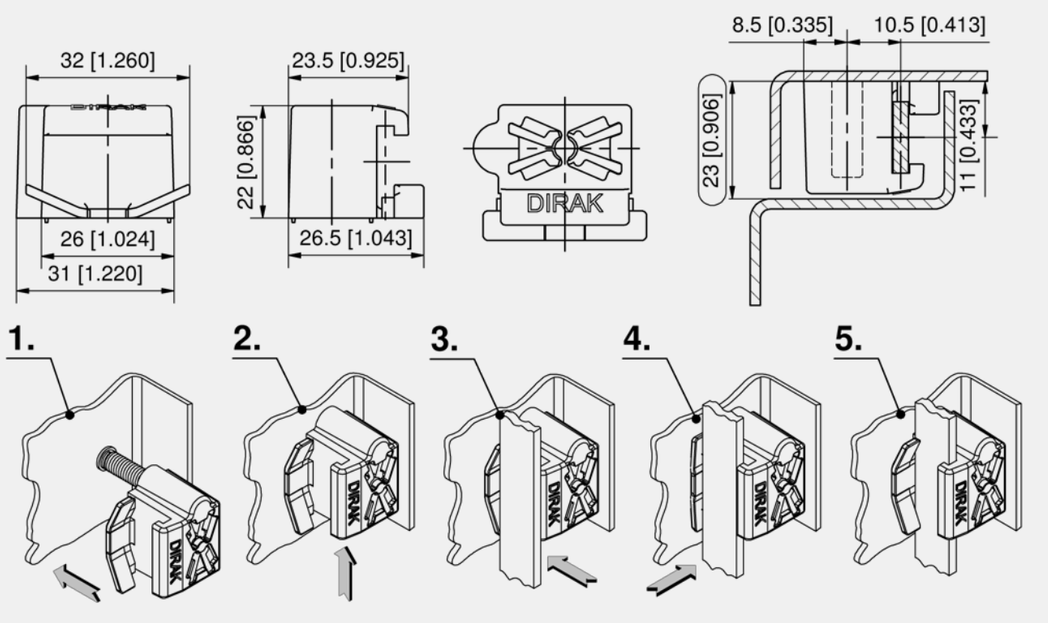

Rod guide

Part Number	Version	Installation type	Delivery Unit
208-1523.54-00000	for flat rod	tool-less	1 pc.

all product details ▸ on DIRAK.com
3-911

Rod Latch for Multi-Point Locking FS PrC

[3-170]

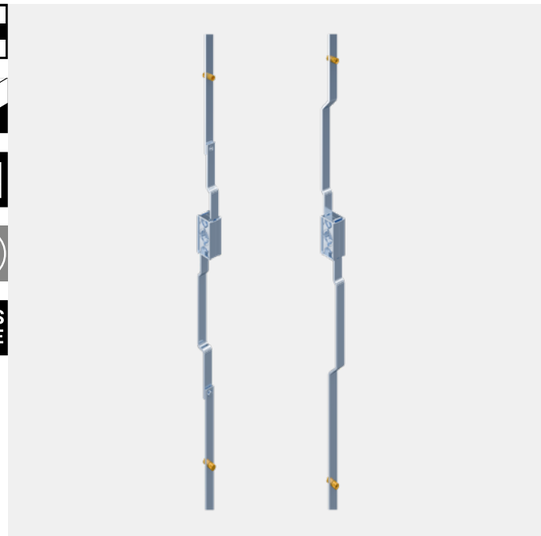

Advantages

- Rod latch for mounting outside the sealed area.
- For Cutout C.
- Flat rods 14x3mm with mounted dual rollers.
- Dual hooks provide compression.
- By rotating around the longitudinal axis RH / LH application.
- Suitable for inserts and escutcheons, wing knob, L-handle or swinghandle.
- Grounding with grounding clip (optional).

Materials

- **Rod latch:** zinc die
- **Rods:** steel, zinc plated
- **Dual rollers:** brass

Remarks

Version a) one-piece - 2 latching points.

Version b) three-part (lock with quick fastening and two rods) - 4 latching points.

1. stroke 24mm
2. open position
3. closed position

Attention: if the rod guide 208-1523.54 is used the weld stud has to be moved 2mm inwards!

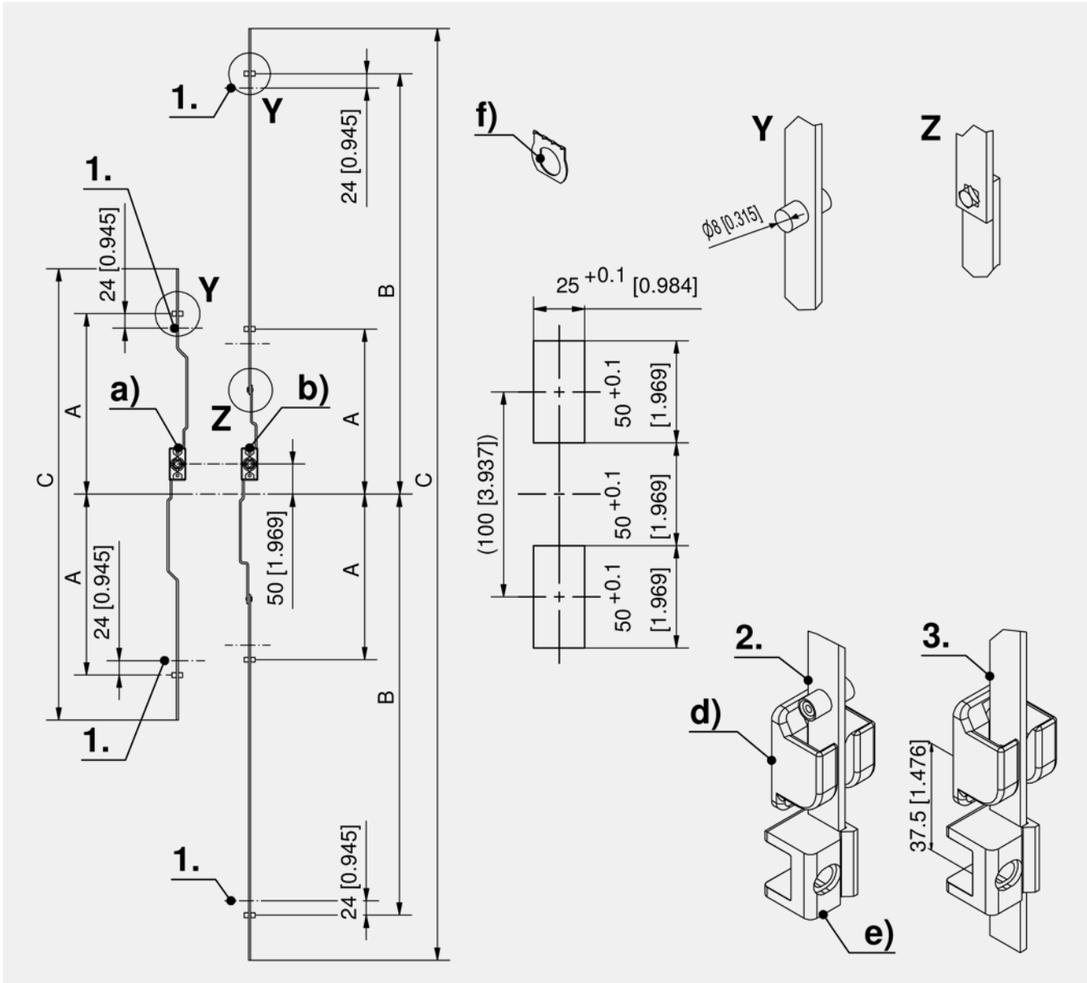

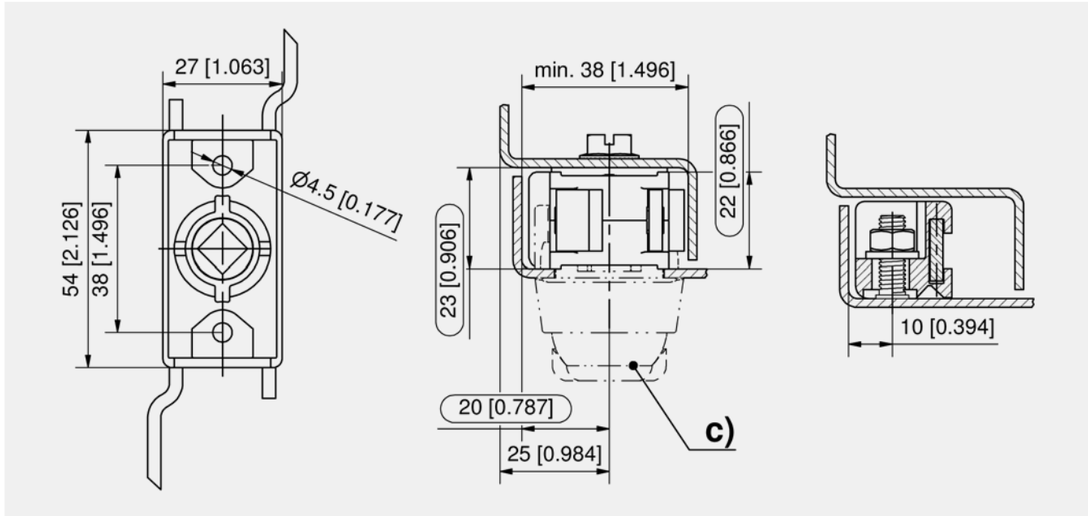

Rod latch + flat rods and dual rollers

	Part Number	Name	Door height Th	Locking points	Dual rollers A	Dual rollers B	Total dimension extended	Installation type	Delivery Unit
a)	208-9101.00-00000	Rod latch, 1-part	800 - 1200 mm	2 pcs.	300		750	screw-on	1 pc.
a)	208-9102.00-00000	Rod latch, 1-part	1200 - 1600 mm	2 pcs.	450		1050	screw-on	1 pc.
b)	208-9107.00-00000	Rod latch, 3-parts	1600 - 1900 mm	4 pcs.	275	700	1550	screw-on	1 pc.
b)	208-9108.00-00000	Rod latch, 3-parts	1900 - 2200 mm	4 pcs.	275	850	1850	screw-on	1 pc.

	Accessories
c) 318	3-101 **Escutcheons and Inserts**
c) 330	3-140 **Handles for Rod Latch FS PrC**
c) 333	3-155.02 **Swinghandle SOFTLINE FS PrC**
c) 334	3-150 **Swinghandle FS PrC for PHZ**
d) 379	3-911 **Rod Guide FS 23mm**
d) 384	3-912 **Dual Hook FS 23mm**
e) 378	3-910 **Rod Guide FS 23mm**
f) 302, 366	3-011 **Grounding Clip Stainless Steel**

3-170
all product details on DIRAK.com

Flat Rod FS with Dual Rollers, variable

[3-171]

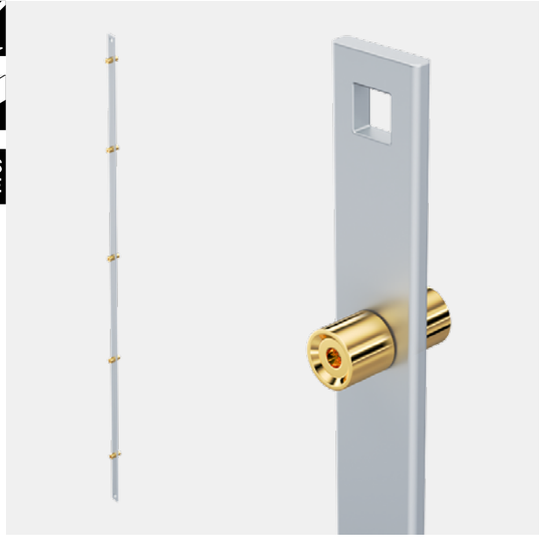

Advantages

- Flat rod with two square holes 6.2mm.
- With brass rollers for use outside of the sealed area.
- The rollers snap into the dual hooks of product system 3-912, 3-910DST.

Materials

- **Flat rod:** steel, zinc plated
- **Dual rollers:** brass

Remarks

For part numbers, price and delivery time please contact DIRAK.

Please provide the following data:

length (L) from center of square cutout to center of square cutout.

Number of dual rollers.

Dimension (X1) from center of square cutout to first dual roller.

Distance (X2) from the centre of the dual roller to the centre of the dual roller.

Rod guides see product systems 3-910 and 3-911.

1. flat rod
2. dual roller

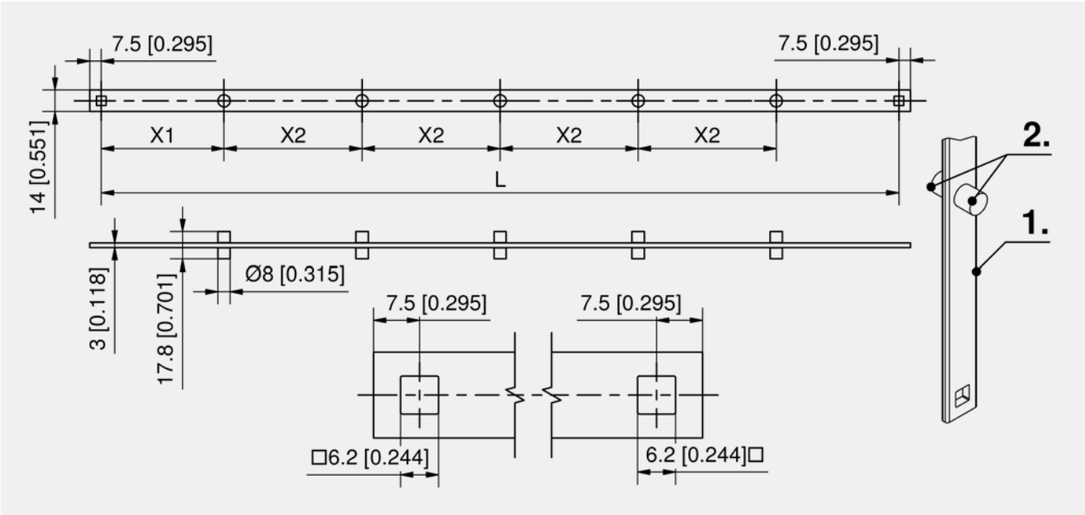

Flat rod

Part Number	Version	Rod dimension WxH	Installation type	Delivery Unit
208-9844.00-Lxxmm	with rollers	14 x 3 mm	tool-less	on request

3-171

◂ all product details on DIRAK.com

DST Flat Rods FS variable

[3-171DST]

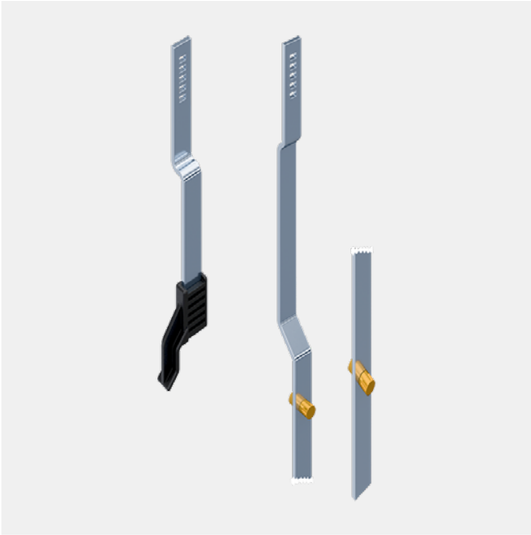

Advantages

- For product system 3-150DST.
- The rod end with five holes is hooked into on the swing-handles of product system 3-150DST.
- Flat rod a) with brass rollers for use outside of the sealed area.
- The rollers snap into the dual hooks of product system 3-912, 3-910DST.
- Flat rod b) for use inside of the sealed area.

Materials

- **Flat rods:** steel, zinc plated
- **Rollers:** brass

Remarks

1. middle of the lock
2. view outside of the sealed area
3. view inside of the sealed area

For part numbers please contact DIRAK.

Please provide the following data:

For outside of the sealed area: dimensions L, Y and Z

For inside of the sealed area: dimension L (X see 3-162)

For ramp-shoe product system 3-162.

Rod guides see product systems 3-910 and 3-911.

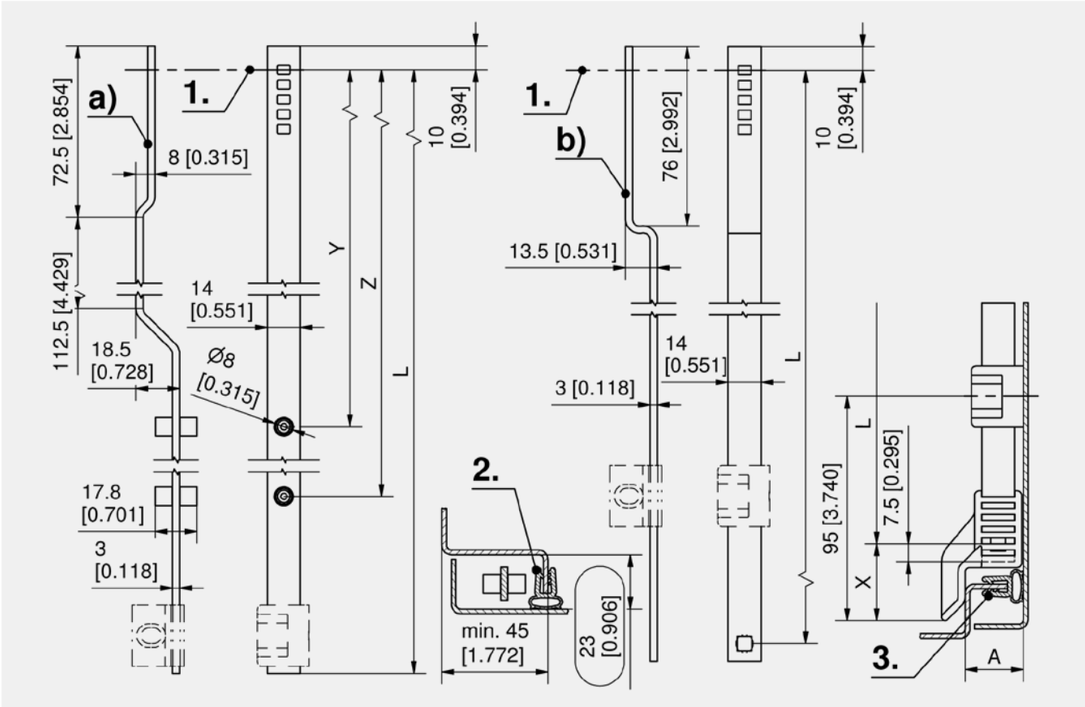

Flat rods 14 x 3mm

	Part Number	Version	Installation type	Delivery Unit
a)	208-9837.00-Lxxmm	with rollers	tool-less	on request
b)	208-1063.15-Lxxmm	for ramp-shoe	tool-less	on request

	Accessories
370	3-162 **Ramp-Shoe for Flat Rod**
378	3-910 **Rod Guide FS 23mm**
386	3-910DST **DST Dual Hook FS**
379	3-911 **Rod Guide FS 23mm**
384	3-912 **Dual Hook FS 23mm**

all product details ▸ on DIRAK.com

3-171DST

Dual Hook FS 23mm

[3-912]

IP 65

RoHS WEEE

Advantages

- Dual hook for flat rods with dual rollers.
- a) and b) IP65 according to DIN EN 60529 with flat external seal (optional).

Materials

a)

- **Dual hook:** PA, black

b, c)

- **Dual hook:** zinc die, zinc plated

Remarks

Required space inside the bend 23mm

1. flat rod
2. dual rollers
3. stroke 24mm

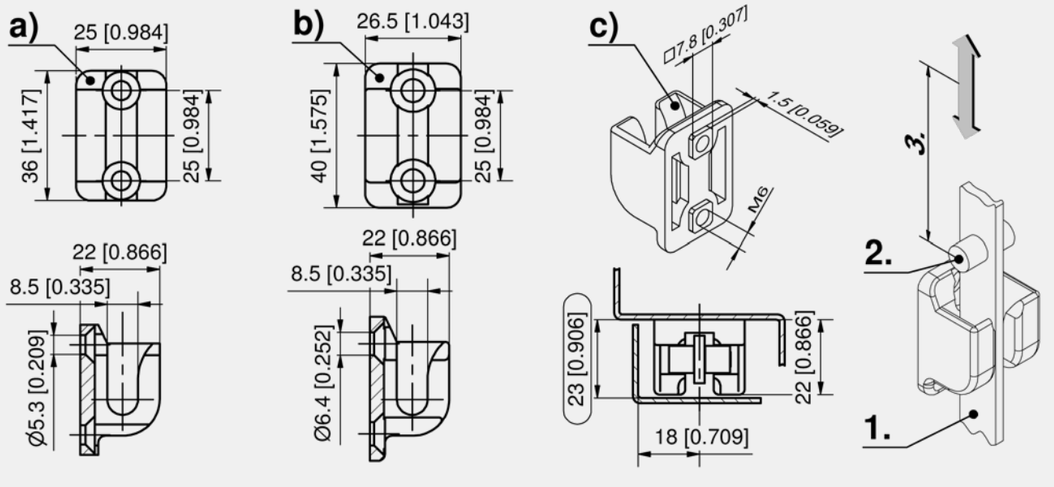

Dual hook

	Part Number	Version	Material	Surface	Installation type	Delivery Unit
a)	208-1446.50-00000	with countersunk holes for M5	PA	black	screw-on	1 pc.
b)	208-1402.00-00000	with countersunk holes for M6	zinc die	zinc plated	screw-on	1 pc.
c)	208-1401.00-00000	with thread and threaded stubs for M6	zinc die	zinc plated	screw-on	1 pc.

Accessories

754 6-040 **Serrated Screws**

Function extension

208-1803.00-00000 **Flat external seal**

3-912
all product details on DIRAK.com

Dual Hook FS Stainless Steel 23mm

[7-910]

Advantages

- Installation by countersunk screws M6
- IP65 according to DIN EN 60529 with flat external seal (optional).

Materials

- **Dual hook:** AISI 316, surface bead blasted finish

Remarks

Required space inside the bend 23mm

1. flat rod
2. dual rollers
3. stroke 24mm

IP 65

RoHS WEEE

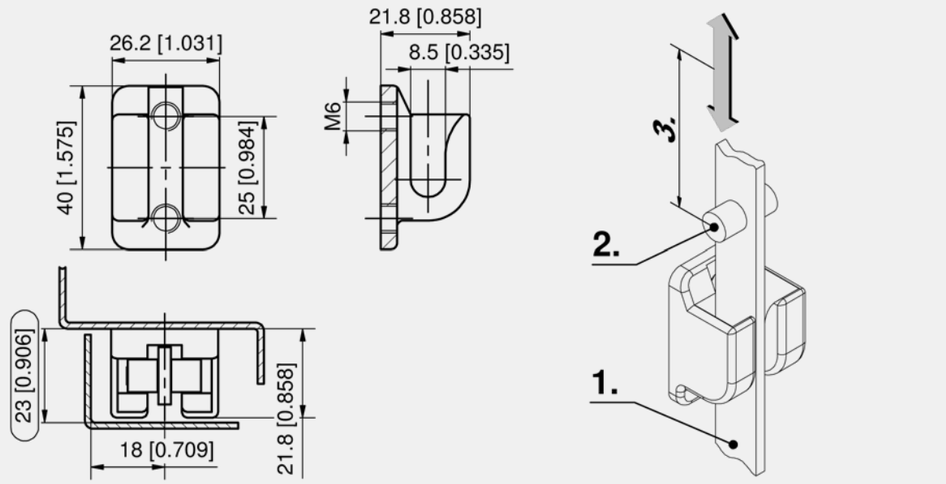

Dual hook

Part Number	Version	Installation type	Delivery Unit
208-1439.95-00000	with thread M6	screw-on	1 pc.

Accessories

754 6-040 **Serrated Screws**

Function extension

208-1803.00-00000 **Flat external seal**

all product details on DIRAK.com
7-910

DST Dual Hook FS

[3-910DST]

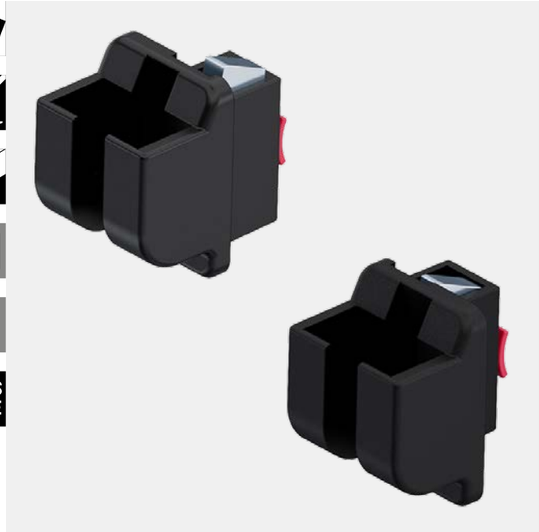

Advantages

- Dual hook with DIRAK-SNAP-Technology for system dimension (18) and bending (25).
- Tool-less installation.
- Closed version.
- Installation by a simple push into the cutout.
- IP65 according to DIN EN 60529 (optional).

Materials

- **Dual hook:** zinc die, black
- **Snap wedges:** sintered metal, plated
- **O-Ring:** NBR/ Perbunan

Remarks

For changing the application from the right to the left side or vice versa, a RH or LH version is needed.

1. flat rod
2. dual rollers
3. stroke 24mm

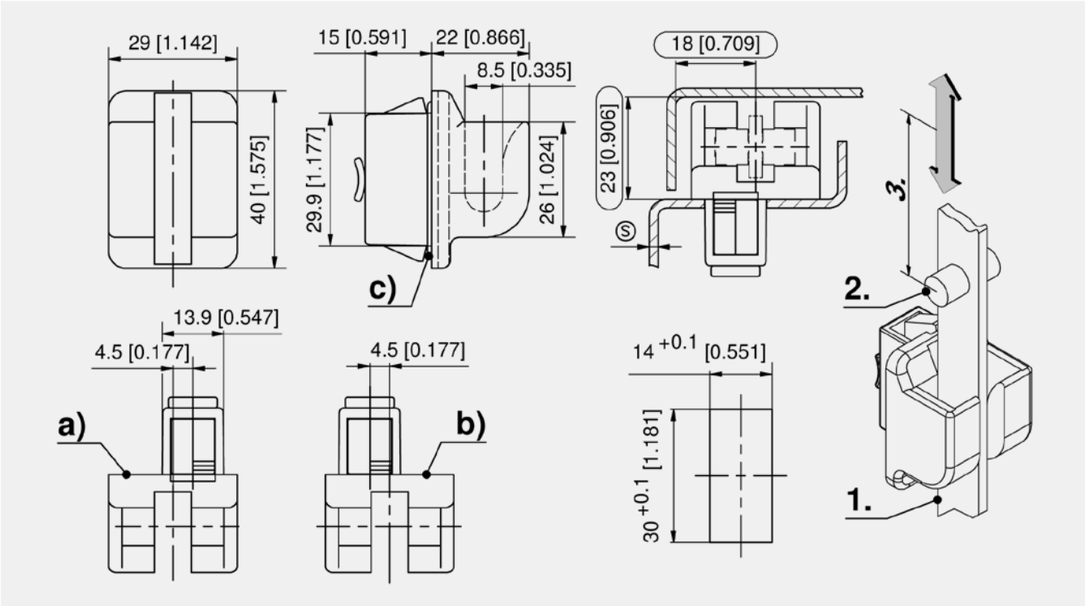

Dual hook

	Part Number	Version	Clamping range (S)	Installation type	Delivery Unit
a)	408-9104.00-00015	RH version	1.2 - 1.7 mm	tool-less	1 pc.
a)	408-9104.00-00020	RH version	1.7 - 2.2 mm	tool-less	1 pc.
a)	408-9104.00-00025	RH version	2.2 - 2.7 mm	tool-less	1 pc.
a)	408-9104.00-00030	RH version	2.7 - 3.2 mm	tool-less	1 pc.
b)	408-9105.00-00015	LH version	1.2 - 1.7 mm	tool-less	1 pc.
b)	408-9105.00-00020	LH version	1.7 - 2.2 mm	tool-less	1 pc.
b)	408-9105.00-00025	LH version	2.2 - 2.7 mm	tool-less	1 pc.
b)	408-9105.00-00030	LH version	2.7 - 3.2 mm	tool-less	1 pc.

	Accessories
c)	200-1005.00-02420 **O-ring 24 x 2.0mm**
764	292-0301.15-00000 **Tool for uninstallation**
764	292-0306.80-02530 **Tool for uninstallation**
762	292-0402.00-03014 **Cutout-cover**
763	292-0701.15-01530 **Reinforcement plate for cutout**

3-910DST
all product details on DIRAK.com

Profile-Cylinder Stainless Steel

[7-069]

Advantages

- Profile-cylinder with insert for swinghandles see product system 7-060 and 7-066.
- 40mm length
- Spring loaded clip-in cam.

Materials

- **Housing, cam and insert:** AISI 316

Remarks

i) security insert with free rotating 8mm triangular front part. The free rotating front part increases the security because the insert can only be opened with the suitable triangular key.

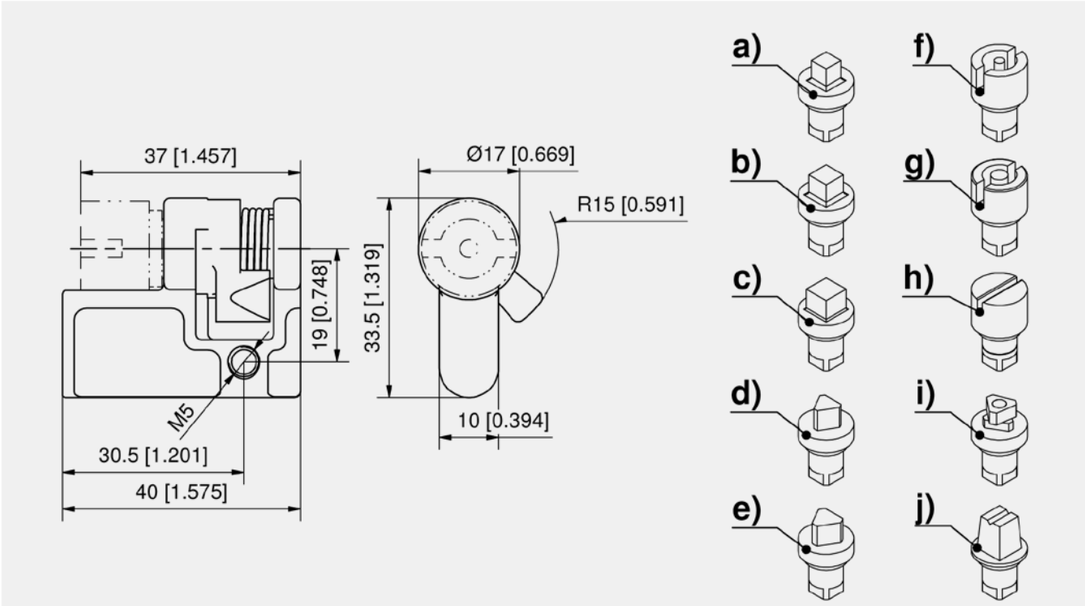

Profile-cylinder with insert

	Part Number	Insert	Delivery Unit
a)	211-9226.00-00000	Square 6mm	1 pc.
b)	211-9227.00-00000	Square 7mm	1 pc.
c)	211-9228.00-00000	Square 8mm	1 pc.
d)	211-9229.00-00000	Triangular 7mm	1 pc.
e)	211-9230.00-00000	Triangular 8mm	1 pc.
f)	211-9231.00-00000	Double bit 3mm pin	1 pc.
g)	211-9232.00-00000	Double bit 5mm pin	1 pc.
h)	211-9233.00-00000	Slotted 2x4mm	1 pc.
i)	211-9242.00-00000	Security insert with free rotating 8mm triangular front part	1 pc.
j)	211-9238.00-00000	Conical square 9mm	1 pc.

	Accessories
768	6-100 **Wrench**
770	6-105 **Keys for the Railway Sector**

all product details on DIRAK.com
7-069

Profile-Cylinder DIN 18252

[2-140]

RoHS WEEE

Advantages

- **a):** clip-in cam 8x45° adjustable. Key removable in closed position only.
- **b):** spring-loaded clip-in cam. Dust-shutter.
- **c):** cam has 90° stroke, **not** clip-in. Cam length is 12.2mm. Dust-shutter.
- **d)** clip-in cam. Dust-shutter.
- **e):** spring-loaded clip-in cam.
- **f):** cam **not** clip-in, 360° stroke.
- **g):** radial pin tumbler cylinder, clip-in cam.
- **h):** insert triangular 8, the first 4mm of the insert are free rotating. Spring-loaded clip-in cam.
- **i):** Polyamide-plug with and without spring-loaded ball.

Materials

- **a):** brass, nickel plated
- **b), c), e) f) and g):** zinc die, chrome plated
- **conical square e) and f): housing:** zinc die, chrome plated, **insert:** steel, chrome plated
- **i) and d):** PA, black
- **h): housing:** zinc die, chrome plated, **insert:** stainless steel
- **Barrel cylinder:** zinc die
- **Dust-shutter:** stainless steel

Remarks

Versions b), c), d) and g) are supplied with 2, Version a) with 3 keys.

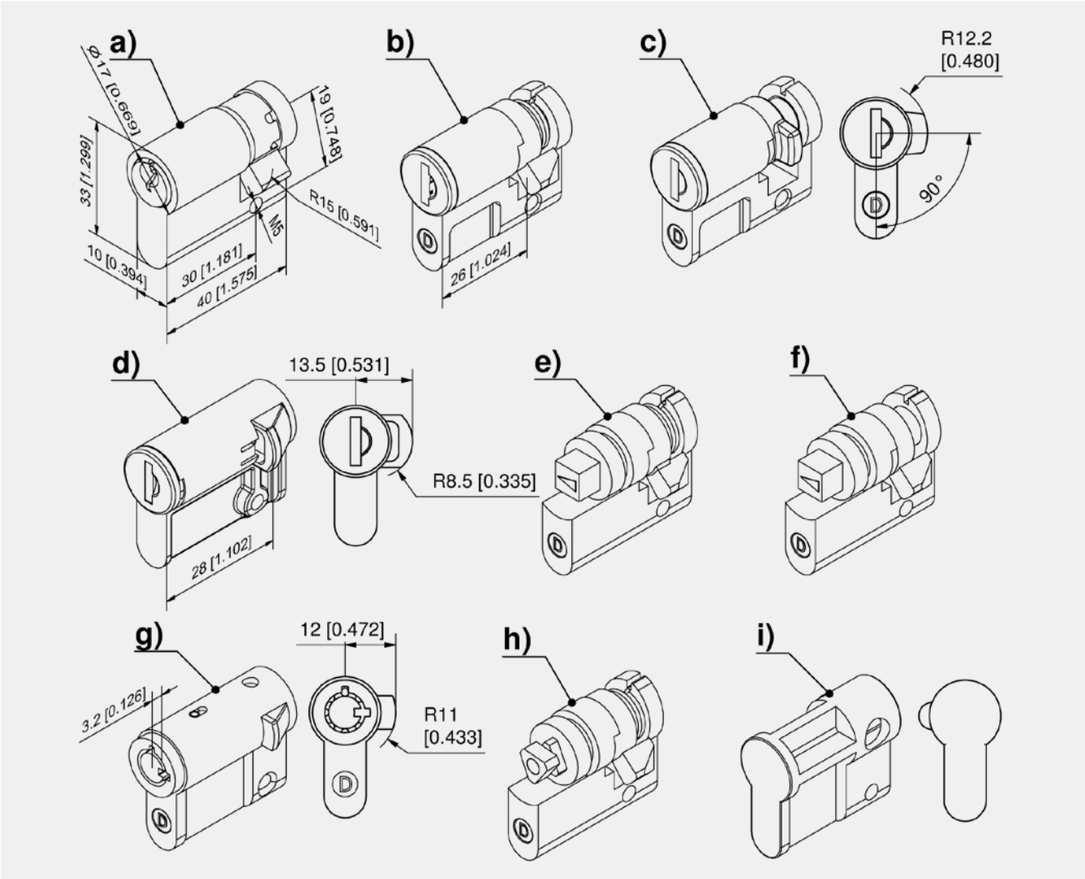

Profile-cylinder with pin tumbler cylinder, DIN 18252, 8 x 45° adjustable

	Part Number	Latching type	Clip-in	Delivery Unit
a)	211-9003.00-00000	keyed alike	No	1 pc.
a)	211-9004.00-00000	keyed different	No	1 pc.

2-140

all product details on DIRAK.com

Profile-cylinder with key cylinder

	Part Number	Latching type	Closing stroke	Clip-in	Delivery Unit
b)	211-9101.00-00000	keyed different		Yes	1 pc.
b)	211-9102.00-00000	keyed alike DIRAK 1333		Yes	1 pc.
b)	511-9102.00-00000	keyed alike DS200		Yes	1 pc.
c)	211-9301.00-00000	keyed different	90°	No	1 pc.
c)	211-9302.00-00000	keyed alike DIRAK 1333	90°	No	1 pc.
c)	511-9302.00-00000	keyed alike DS200	90°	No	1 pc.

Profile-cylinder PA with key cylinder

	Part Number	Latching type	Clip-in	Delivery Unit
d)	211-9113.00-00000	keyed alike DIRAK 1333	Yes	1 pc.
d)	211-9115.00-00000	keyed different (dual entry)	Yes	1 pc.

Profile-cylinder with insert

	Part Number	Insert	Closing stroke	Clip-in	Delivery Unit
e)	211-9202.00-00000	Square 6mm		Yes	1 pc.
e)	211-9203.00-00000	Square 7mm		Yes	1 pc.
e)	211-9204.00-00000	Square 8mm		Yes	1 pc.
e)	211-9205.00-00000	Square 8mm, slotted		Yes	1 pc.
e)	211-9206.00-00000	Triangular 7mm		Yes	1 pc.
e)	211-9207.00-00000	Triangular 8mm		Yes	1 pc.
e)	211-9208.00-00000	Double bit 3mm pin		Yes	1 pc.
e)	211-9209.00-00000	Double bit 5mm pin		Yes	1 pc.
e)	211-9210.00-00000	Triangular 6.5mm CNOMO		Yes	1 pc.
e)	211-9211.00-00000	Socket hex. 10mm		Yes	1 pc.
e)	211-9212.00-00000	Slotted 2x4mm		Yes	1 pc.
e)	211-9213.00-00000	Daimler Benz type		Yes	1 pc.
e)	211-9214.00-00000	Crown type		Yes	1 pc.
e)	211-9215.00-00000	Square socket 6mm		Yes	1 pc.
e)	211-9216.00-00000	Square socket 7mm		Yes	1 pc.
e)	211-9217.00-00000	Square socket 8mm		Yes	1 pc.
e)	211-9218.00-00000	Slotted recessed coinproof		Yes	1 pc.
e)	211-9219.00-00000	Half-round czech		Yes	1 pc.
e)	211-9220.00-00000	Hex. Belcore 7/16"		Yes	1 pc.
e)	211-9235.00-00000	Conical square 9mm		Yes	1 pc.
f)	211-9203.00-00001	Square 7mm	360°	No	1 pc.
f)	211-9204.00-00001	Square 8mm	360°	No	1 pc.
f)	211-9206.00-00001	Triangular 7mm	360°	No	1 pc.
f)	211-9207.00-00001	Triangular 8mm	360°	No	1 pc.
f)	211-9208.00-00001	Double bit 3mm pin	360°	No	1 pc.
f)	211-9209.00-00001	Double bit 5mm pin	360°	No	1 pc.
f)	211-9212.00-00001	Slotted 2x4mm	360°	No	1 pc.
f)	211-8057.00-00000	Conical square 9mm	360°	No	1 pc.

Profile-cylinder with radial pin tumbler cylinder

	Part Number	Locking	Latching type	Clip-in	Delivery Unit
g)	211-9106.00-00000	Push button	keyed different	Yes	1 pc.
g)	211-9107.00-00000	Push button	keyed alike DIRAK D0205	Yes	1 pc.

Profile-cylinder with security insert

	Part Number	Insert	Clip-in	Delivery Unit
h)	211-9244.00-00000	Security insert with free rotating 8mm triangular front part	Yes	1 pc.

Profile-cylinder with blind plug

	Part Number	Name	Clip-in	Delivery Unit
i)	211-0401.03-00000	Blind plug without spring-loaded ball	No	1 pc.
i)	211-9201.00-00000	Blind plug with spring-loaded ball	Yes	1 pc.

	Accessories
768	6-100 **Wrench**
770	6-105 **Keys for the Railway Sector**

Latches

Page 473

With and without lock.

With cylinder or without – our latches meet the most exacting standards for durability, smooth operation and convenience.

www.elinebydirak.com

Do you prefer a smart solution? We have that too.

The MLU1003 electronic rotary latch lock is the solution for a smart and concealed latching solution, for example on parcel stations. It can easily be integrated into an access control system and its opening status can be evaluated.

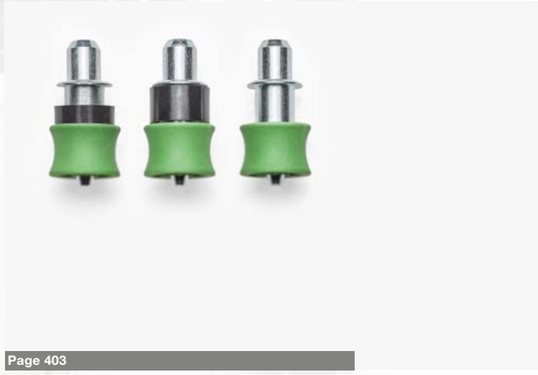

Page 403

Two in one.

The locking pin not only secures the pullouts, but is also perfect for use as a hinge.

Page 448

From the front only.

The compression lever latch features front installation in the cutout. There is no cumbersome installation from inside.

TAKING A FURRY FRIEND WITH YOU ON VACATION, SAFELY?

No problem with our latch for small animal boxes. The slam latch 6-151 locks automatically when the door closes. The locked door cannot be opened from the inside because the handle has to be moved to open it.

Page 421

Page 418

DIRAK-SNAP-Technology.

Did you know? Most of our products are also available with DIRAK-SNAP-Technology.

Page 409

Unique.

The new polyamide over center toggle latch is reliable, strong and corrosion-resistant, which makes it suitable for indoor and outdoor areas.

Page 426

Sturdy and flexible.

The sturdy slam latch with flexible profile cylinder ensures reliable closing in different installation positions.

Latches

Slam latch
Page: 417–422, 426–429, 478

Snap lock
Page: 399–401, 423

With dead bolt
Page: 415, 424, 430, 470–472

With compression
Page: 412–413, 432, 438, 444-446, 448-456, 463

With cylinder barrel
Page: 400–401, 418–422, 448–453, 458, 473

For profile cylinder
Page: 424-427, 430–442

For insert
Page: 416, 428, 444–446, 448–449, 458–459, 476

For padlock
Page: 408, 456–457, 468–469

For sliding doors
Page: 473–476

Overview

398 Quick Release Fastener [1-030]

399 Snap-Lock [1-060]

400 Snap-Lock L30 [1-500]

401 Snap-Lock Pr20.1 [1-501]

402 Indexing Plunger with Handle [6-210]

403 Indexing Plunger with Handle [6-211]

404 Indexing Plunger with Rest Position [6-212]

405 Pin Hinge Pr02 120° [4-394]

406 Adjustable Clamping Levers [6-141]

407 Over Center Toggle Latch Stainless Steel [7-320]

408 Over Center Toggle Latch with Spring Clip Stainless Steel [7-320.01]

409 Over Center Toggle Latch PA [6-240]

410 Pull Latch Handle [1-068]

411 DST Pull Latch Handle [1-069DST]

412 DST Clamping Latch [1-070DST]

413 DST Clamping Latch [1-072DST]

414 Dual Ball Catch [6-130]

415 Slam Lock [6-120]

416 Flush Mounted Trap-Door Latch [6-1381]

417 Slam Latch Stainless Steel [7-330]

418 DST Pullhandle with Slam-Hook PrC [2-060DST]

419 Slam Latch [6-127]

420 Slam Latch [6-150]

421 Slam Latch [6-151]

422 DST Slam Latch PrA [6-125DST]

423 Snap-Lock [6-122]

424 Bolt Lock for Profile-Cylinder [6-114]

425 Polyamide Lock Cover [6-115]

426 Slam Latch for Profile-Cylinder [6-111]

427 Slam Latch for two Profile-Cylinder [6-111.01]

428 Slam Latch for Insert [6-111.02]

429 Lock Support for Slam Latch[6-111.03]

430 Dead Bolt Lock [6-110]

432 Compression Latch PHZ [6-500]

434 2-Point Latch PHZ, vertical [6-501]

436 2-Point Latch PHZ, horizontal [6-501.01]

438 Compression Latch PHZ with Lock Cover [6-502]

440 2-Point Latch PHZ with Lock Cover [6-503]

442 2-Point Latch PHZ with Lock Cover [6-503.01]

444 Compression Latch with Insert [6-504]

446 Latching Device [6-510]

447 Flat Rod for Multi-Point Locking [6-511]

448 Compression Lever Latch [6-160]

450 Compression Lever Latch [6-160.01]

452 Compression Lever Latch PA [6-162]

453 Compression Lever Latch [6-167]

454 Compression Latch PA [6-166]

456 Compression Latch [1-205]

458 Heavy Duty Latch System for HVAC Applications [6-280]

460 Handle Inside, for Heavy Duty Latch System [6-280.01]

461 Shafts for Heavy Duty Latches [6-280.02]

462 Cams for Heavy Duty Latches [6-280.03]

463 Compression Cam for Heavy Duty Latches [6-280.04]

464 Bezels for Heavy Duty Latches [6-280.05]

466 Bridge Clamp [6-140]

467 Heavy Duty Latch [6-270]

468 L-Handle M10 for Padlock Stainless Steel [7-073.01]

469 L-Handle 3/8" for Padlock Stainless Steel [7-073.02]

470 Locking Bar System □10 [6-320.01]

471 Locking Bar System □13 [6-320.02]

472 Locking Bar System □16 [6-320.03]

473 Slam Latch for Sliding Door [6-152]

474 Machine Handle for Sliding Doors [6-1680]

476 Sliding Door Latch [1-415]

477 Pull and Lock Hook [1-250]

478 Slam-Cam for Quarter-Turns Pr20.1 [1-265]

Quick Release Fastener

[1-030]

IP 65

RoHS WEEE

Advantages

- Quick-release fastener for mounting covers, side and rear panels.
- The fastener consists of two basic components.
- IP65 according to DIN EN 60529 (optional).

Materials

- **Stud:** PA black or grey RAL 7032 or Durethan BKV 30 N1 matte black
- **Wing:** PA
- **Cam:** spring steel, zinc plated

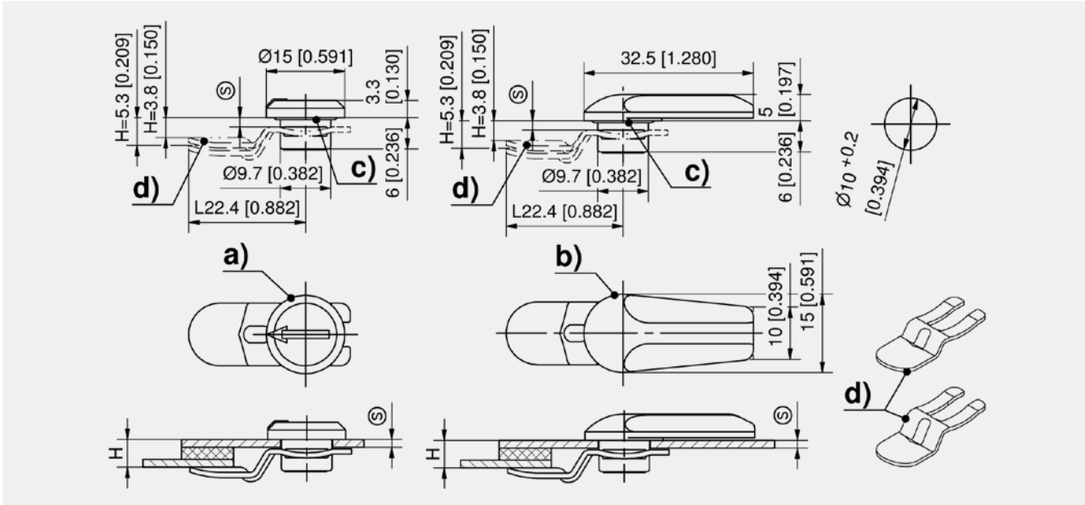

Quick release fastener, stud

	Part Number	Material	Surface	Installation type	Delivery Unit
a)	246-0103.03-00000	PA	black	tool-less	20 pcs.
a)	246-0103.06-07032	PA	grey RAL 7032	tool-less	20 pcs.
a)	246-0103.50-00000	Durethan BKV 30 N1	black matt	tool-less	20 pcs.

Quick release fastener, wing

	Part Number	Material	Surface	Installation type	Delivery Unit
b)	246-0104.03-00000	PA	black	tool-less	20 pcs.
b)	246-0104.06-07032	PA	grey RAL 7032	tool-less	20 pcs.

Cams

	Part Number	Name	Material	Delivery Unit
d)	246-0202.00-00000	Cam H 3.5mm	spring steel	20 pcs.
d)	246-0204.00-00000	Cam H 5mm	spring steel	20 pcs.

Function extension

c) 220-0601.00-00000 **O-ring 9.1 x 1.6mm**

1-030

all product details on DIRAK.com

Snap-Lock

[1-060]

RoHS WEEE

Advantages

- With slam function.
- Nut fixing.
- Released by pushing.

Materials

- **Snap-lock:** zinc die, chrome plated
- **Nuts:** steel, zinc plated

Remarks

(S) Door-thickness max. 6.5mm

Finger pull only suitable for version **a)**

Larger lockable version see product system 1-500 or 1-501.

1. locked

2. unlocked

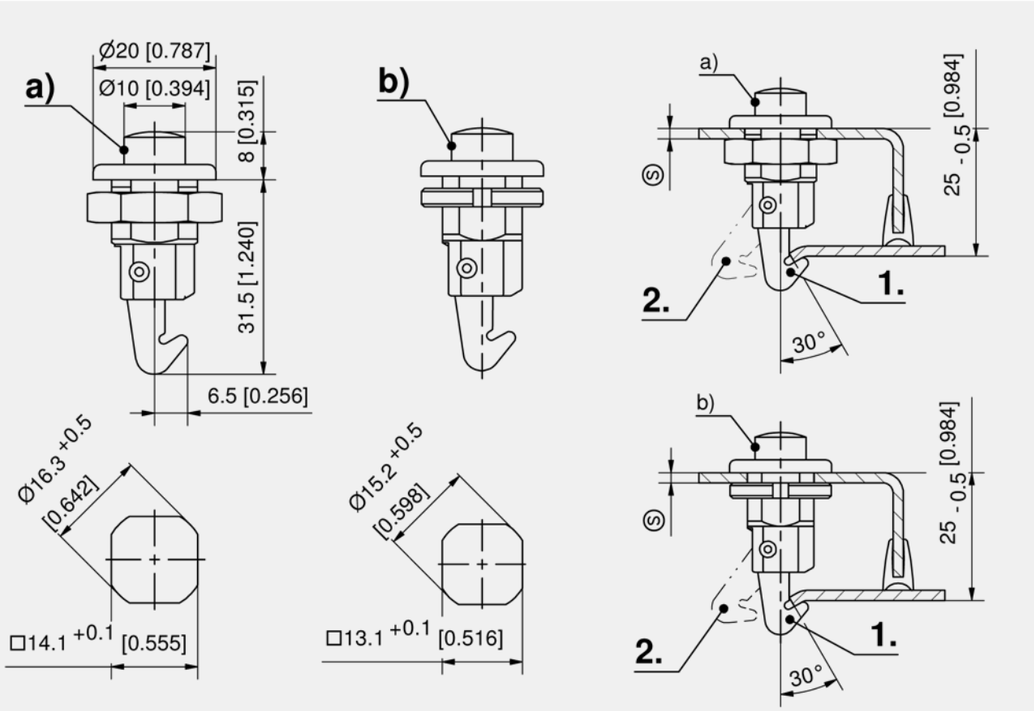

Snap-lock

	Part Number	Fastening type	Cutout	Delivery Unit
a)	252-9001.00-00000	Nut	□14.1 mm	10 pcs.
b)	252-9004.00-00000	Groove nut	□13.1mm	10 pcs.

Accessories

a) 148 220-1301.00-00000 **Finger pull**

all product details on DIRAK.com

1-060

Snap-Lock L30

[1-500]

RoHS WEEE

Advantages

- The spring loaded cam of this snap-lock is operated by the key.
- Lock is supplied with nut and wide stabilizing washer underneath nut.
- All locks supplied with two keys.

Materials

- **Snap-Lock:** zinc die, chrome plated
- **Washer and nut:** steel, zinc plated

Remarks

(S) Door-thickness max. 10mm

1. black coating

2. washer

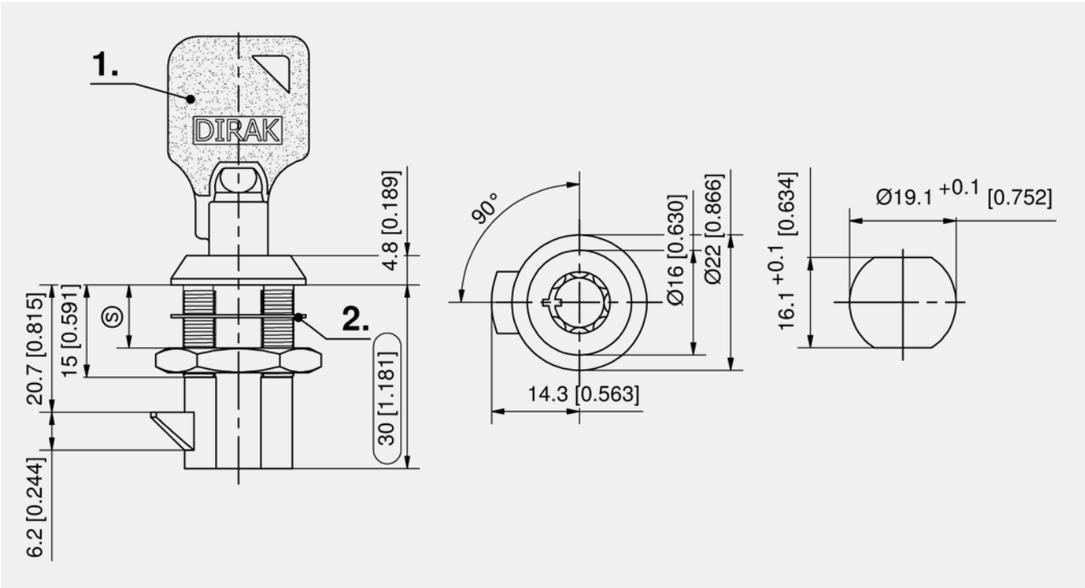

Snap-lock

Part Number	Latching type	Cutout	Delivery Unit
264-9102.00-00000	keyed alike DIRAK D0205	16.1 x 19.1 mm	1 pc.
264-9101.00-00000	keyed different	16.1 x 19.1 mm	1 pc.

1-500

◂ all product details on DIRAK.com

Snap-Lock Pr20.1

[1-501]

Advantages

- **Version a):** the spring loaded cam is operated by the key.
- **Version b):** the spring loaded cam is operated by a lockable push-button.
- **Version c):** the spring loaded cam is operated by a push-button.
- All locks supplied with two keys.
- Grounding by single-sided grounding nut.

Materials

- **Snap-Lock:** zinc die, chrome plated
- **Grounding Nut:** zinc die

Remarks

By using a finger pull the dimensions (S) and H decreases by **2mm!**

1. black coating

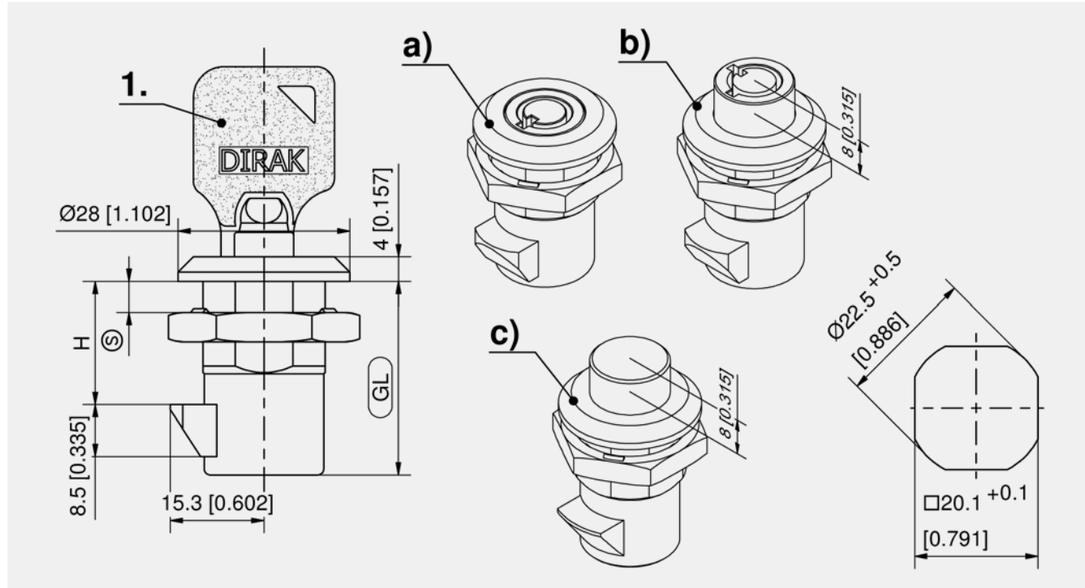

Snap-lock

	Part Number	Latching type	Housing length	H-dimension	Door-thickness (S)	Delivery Unit
a)	264-9001.00-00000	keyed different	31.5 mm	20 mm	10 mm	1 pc.
a)	264-9002.00-00000	keyed alike DIRAK D0205	31.5 mm	20 mm	10 mm	1 pc.
a)	264-9003.00-00000	keyed different	36.5 mm	25 mm	15 mm	1 pc.
a)	264-9004.00-00000	keyed alike DIRAK D0205	36.5 mm	25 mm	15 mm	1 pc.
b)	264-9005.00-00000	keyed different	31.5 mm	20 mm	10 mm	1 pc.
b)	264-9006.00-00000	keyed alike DIRAK D0205	31.5 mm	20 mm	10 mm	1 pc.
b)	264-9007.00-00000	keyed different	36.5 mm	25 mm	15 mm	1 pc.
b)	264-9008.00-00000	keyed alike DIRAK D0205	36.5 mm	25 mm	15 mm	1 pc.
c)	264-9009.00-00000	Push button	31.5 mm	20 mm	10 mm	1 pc.

+	Accessories
172	200-4703.03-00000 **Finger pull for Ø28**

all product details ▸ on DIRAK.com

1-501

Indexing Plunger with Handle

[6-210]

RoHS WEEE

Advantages

- Indexing plunger with spring-loaded handle.
- Installed using a simple push into the cutout.
- Enables fixing of drawers.
- Large, ergonomically designed handle for ease of use.

Materials

- **Housing:** PA, black
- **Handle:** PA, green
- **Plunger pin and spring:** steel, zinc plated

Remarks

1. cutout plunger pin
2. cutout housing
3. indexing plunger
4. handle

Also available as concealed hinge, see product system 4-393.

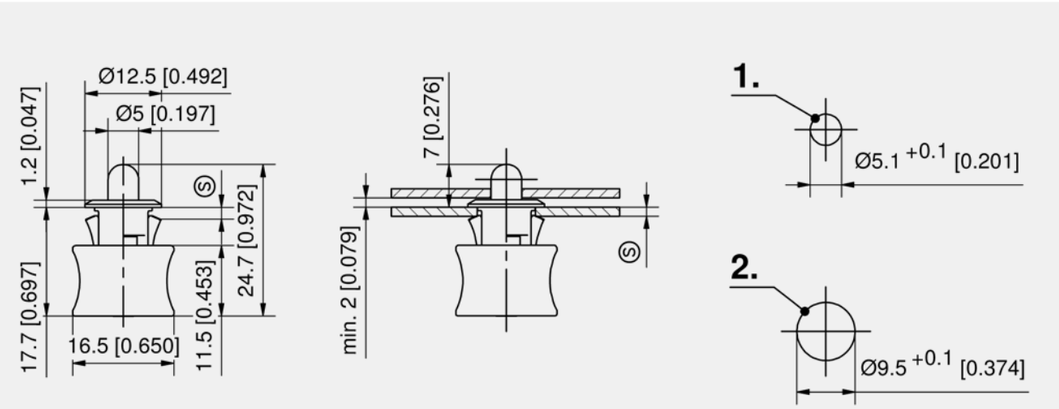

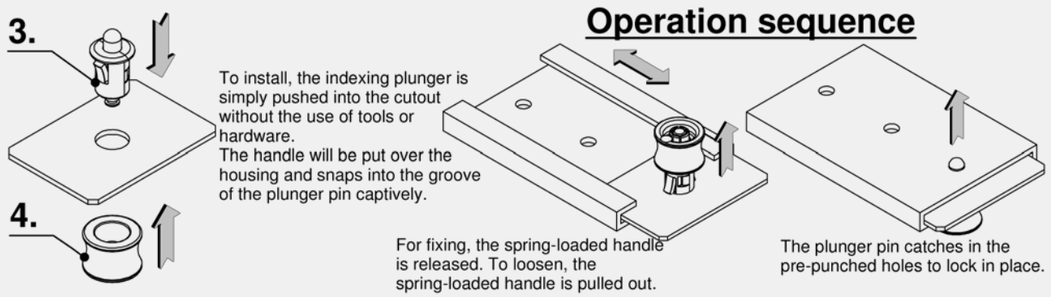

Indexing plunger with handle

Part Number	Clamping range (S)	Pin diameter Ø	Cutout pin	Delivery Unit
245-9304.00-00000	1.4 - 1.6 mm	5 mm	Ø 5,1 + 0,1mm	10 pcs.

6-210
◂ all product details on DIRAK.com

Indexing Plunger with Handle

[6-211]

Advantages

- Indexing plunger with spring-loaded handle.
- Installed using a simple push into the cutout.
- Enables fixing of covers and flaps in defined positions.
- Also usable as a hinge.
- Flexible use for material thicknesses from 1 - 13mm.
- Distance ring 8 and 4mm included in scope of delivery.

Materials

- **Indexing plunger:** steel, zinc plated
- **Handle:** PA, green
- **Distance ring:** PA, black

RoHS WEEE

Remarks

H depending on clamping range (S) 9.6 - 5.6mm

1. assembled product with distance ring 8mm (clamping range (S) 1 - 5mm).

2. assembled product with distance ring 4mm (clamping range (S) 5 - 9mm).

3. assembled product **without** distance ring (clamping range (S) 9 - 13mm).

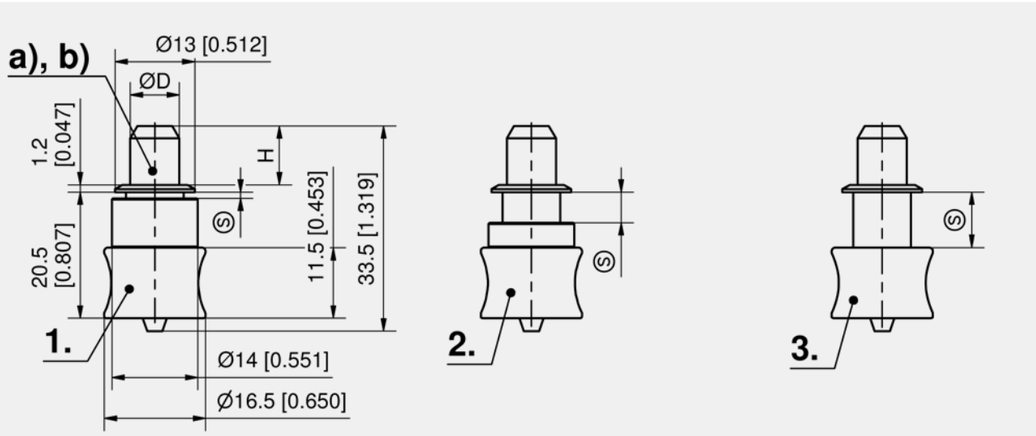

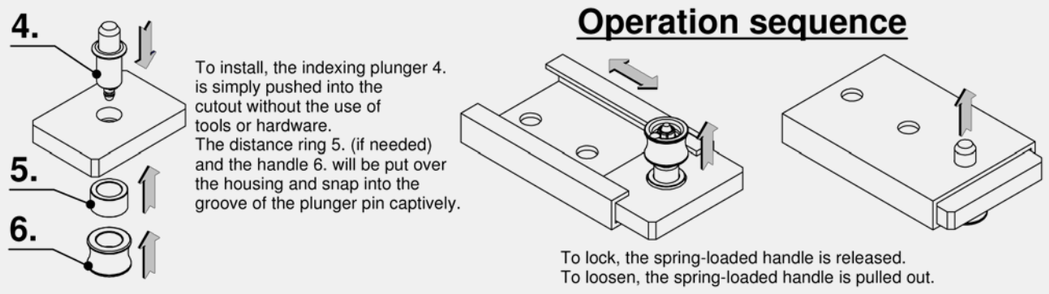

Indexing plunger with handle

	Part Number	Cutout pin	D	1. clamping range (S) with 8mm distance ring	2. clamping range (S) with 4mm distance ring	3. clamping range (S) without distance ring	H depending on clamping range (S)	Cutout housing	Delivery Unit
a)	245-9305.00-00000	Ø 6,1 + 0,1 mm	6 mm	1 - 5 mm	5 - 9 mm	9 - 13 mm	Ø 9.6 - 5.6 mm	Ø 9.5 + 0.1 mm	20 pcs.
b)	245-9306.00-00000	Ø 8,1 + 0,1 mm	8 mm	1 - 5 mm	5 - 9 mm	9 - 13 mm	Ø 9.6 - 5.6 mm	Ø 9.5 + 0.1 mm	20 pcs.

all product details ▸ on DIRAK.com
6-211

Indexing Plunger with Rest Position

[6-212]

RoHS WEEE

Advantages

- Indexing plunger with spring-loaded handle and rest position.
- Installed using a simple push into the cutout.
- Enables fixing of covers and flaps in defined positions.
- The spring-loaded handle is fixed by pulling and then turning 90°.
- Avoids linear movement between two parts.
- Also useable as a hinge.
- Flexible use for material thicknesses of 1 - 8mm.

Materials

- **Housing and distance ring**: PA, black
- **Handle / cap**: PA, green

Remarks

Available with various head heights: 2, 3 and 4mm for different gap dimensions.

1. possible countersunk in the cutout. As a result, the gap between two components and the thickness of the material can be adjusted.

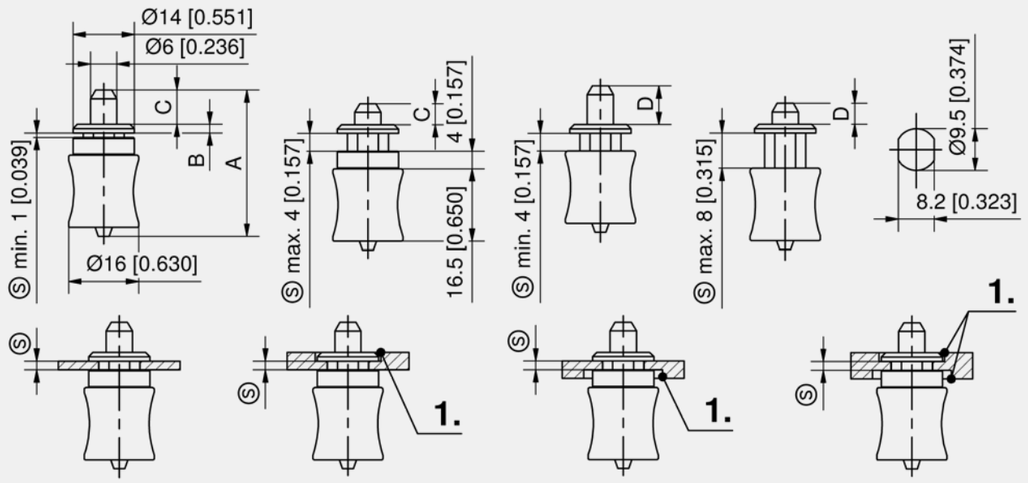

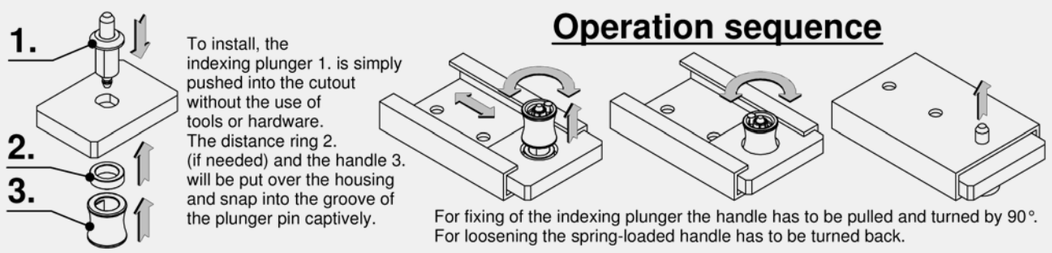

Indexing plunger with rest position

Part Number	Head height B	at a min. - max. clamping range (S) without distance ring the plunger pin height is Cs	at a min. - max. clamping range (S) without distance ring the plunger pin height is D	total Length A	Cutout housing	Cutout pin	Pin diameter Ø	Delivery Unit
245-9317.00-00020	2 mm	4.8 - 7.8 mm	4.8 - 8.8 mm	33.4 mm	Ø 9.5 x 8.2 mm	Ø 6,1 + 0,1 mm	6 mm	20 pcs.
245-9317.00-00030	3 mm	5.8 - 8.8 mm	5.8 - 9.8 mm	35.4 mm	Ø 9.5 x 8.2 mm	Ø 6,1 + 0,1 mm	6 mm	20 pcs.
245-9317.00-00040	4 mm	4.8 - 7.8 mm	4.8 - 8.8 mm	35.4 mm	Ø 9.5 x 8.2 mm	Ø 6,1 + 0,1 mm	6 mm	20 pcs.

6-212
◂ all product details on DIRAK.com

Pin Hinge Pr02 120°

[4-394]

Advantages

- Pin hinge with spring-loaded handle.
- For nested doors.
- Hinge concealed.
- RH / LH application.
- 120° Opening angle.
- Flexible use for material thicknesses up to 4mm.
- The spring loaded pin allows for an easy and quick installation and removal of the door.
- Installed using a simple push into the cutout.
- The installation is tool-less with a simple push into the appropriate cutout.
- Usable also as locking pin.

Materials

- **Pin:** steel, zinc plated
- **Handle:** PA, green
- **Spacer:** PA, black

Remarks

1. assembled without tools by pressing the locking pin into the handle.
2. disassembling the door.
3. door installed.
4. by reducing the material in the cutout, the distance between the two components can be adjusted.

On request also available with another handle (see 6-211).

RoHS WEEE

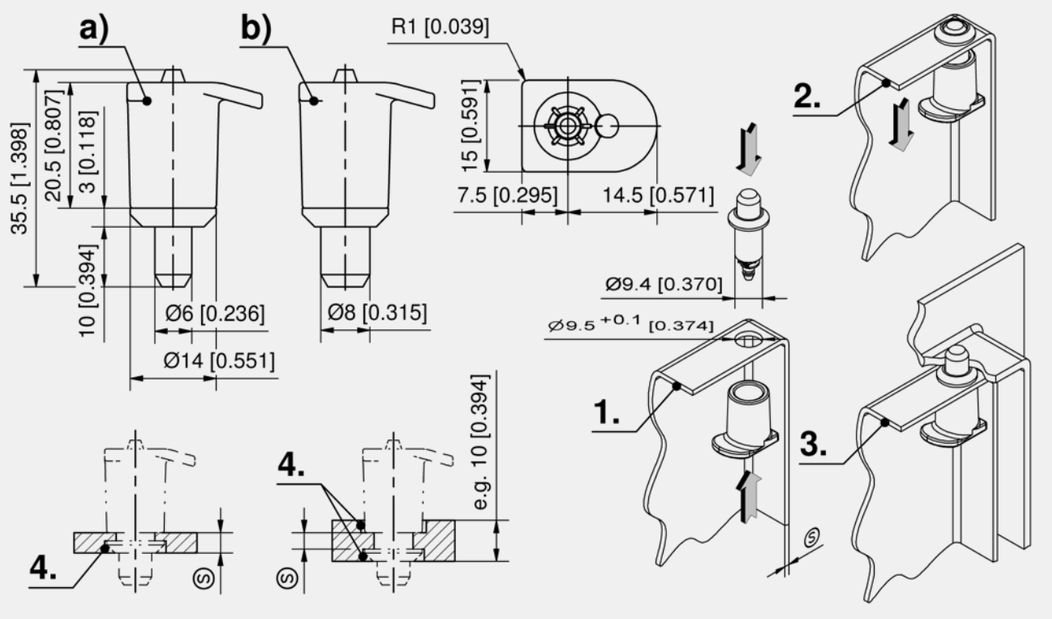

Pin hinge

	Part Number	Clamping range (S)	Pin diameter Ø	Cutout pin	Pin version	Installation type	Delivery Unit
a)	245-9312.00-00000	0 - 4 mm	6 mm	Ø 6,1 + 0,1 mm	spring-loaded	tool-less	50 pcs.
b)	245-9313.00-00000	0 - 4 mm	8 mm	Ø 8,1 + 0,1 mm	spring-loaded	tool-less	50 pcs.

all product details ▸ on DIRAK.com
4-394

Adjustable Clamping Levers

RoHS WEEE

Advantages

- Handle freely adjustable by pressing the button.
- Automatic latching of the handle after releasing the push-button.
- Secure and tool-less clamping and tensioning of components.

Materials

- **Handle:** PA, black
- **Bush:** brass
- **Stud:** steel, zinc plated

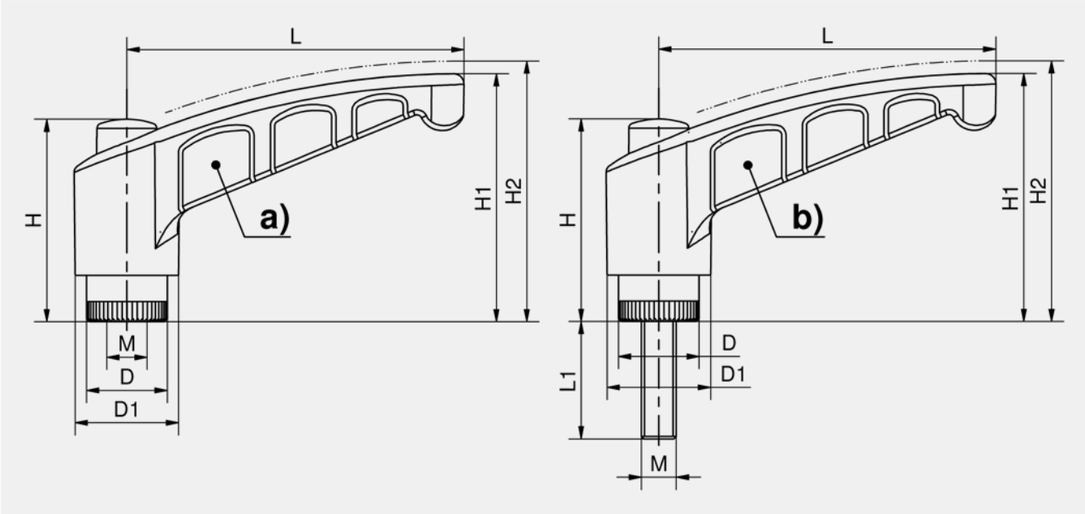

Adjustable clamping lever with internal thread

	Part Number	D	D1	H	H1	H2	L	M	Delivery Unit
a)	214-9101.00-00000	12 mm	15 mm	29 mm	34 mm	37 mm	45 mm	M5	100 pcs.
a)	214-9102.00-00000	12 mm	15 mm	29 mm	34 mm	37 mm	45 mm	M6	100 pcs.
a)	214-9103.00-00000	16 mm	20 mm	36 mm	45 mm	48 mm	65 mm	M8	100 pcs.
a)	214-9104.00-00000	19 mm	23 mm	46 mm	56 mm	59 mm	80 mm	M10	100 pcs.

Adjustable clamping lever with threaded stud

	Part Number	D	D1	H	H1	H2	L	L1	M	Delivery Unit
b)	214-9101.00-00510	12 mm	15 mm	29 mm	34 mm	37 mm	45 mm	10 mm	M5	100 pcs.
b)	214-9102.00-00620	12 mm	15 mm	29 mm	34 mm	37 mm	45 mm	20 mm	M6	100 pcs.
b)	214-9102.00-00625	12 mm	15 mm	29 mm	34 mm	37 mm	45 mm	25 mm	M6	100 pcs.
b)	214-9103.00-00820	16 mm	20 mm	36 mm	45 mm	48 mm	65 mm	20 mm	M8	100 pcs.
b)	214-9103.00-00825	16 mm	25 mm	36 mm	45 mm	48 mm	65 mm	25 mm	M8	100 pcs.
b)	214-9103.00-00830	16 mm	20 mm	36 mm	45 mm	48 mm	65 mm	30 mm	M8	100 pcs.
b)	214-9104.00-01020	19 mm	23 mm	46 mm	56 mm	59 mm	80 mm	20 mm	M10	100 pcs.
b)	214-9104.00-01025	19 mm	23 mm	46 mm	56 mm	59 mm	80 mm	25 mm	M10	100 pcs.
b)	214-9104.00-01030	19 mm	23 mm	46 mm	56 mm	59 mm	80 mm	30 mm	M10	100 pcs.

6-141
◂ all product details on DIRAK.com

Over Center Toggle Latch Stainless Steel

Advantages

- Secure tightening and locking of two components.
- Clamping takes place via the dead center override.
- Version b) and c) release push button and vibration-proof
- Catch hooks are included.
- The surface of the over center toggle latches is satin polished.

Materials

- **Over center toggle latch:** AISI 304

Remarks

1. release push button
2. catch hook

RoHS WEEE

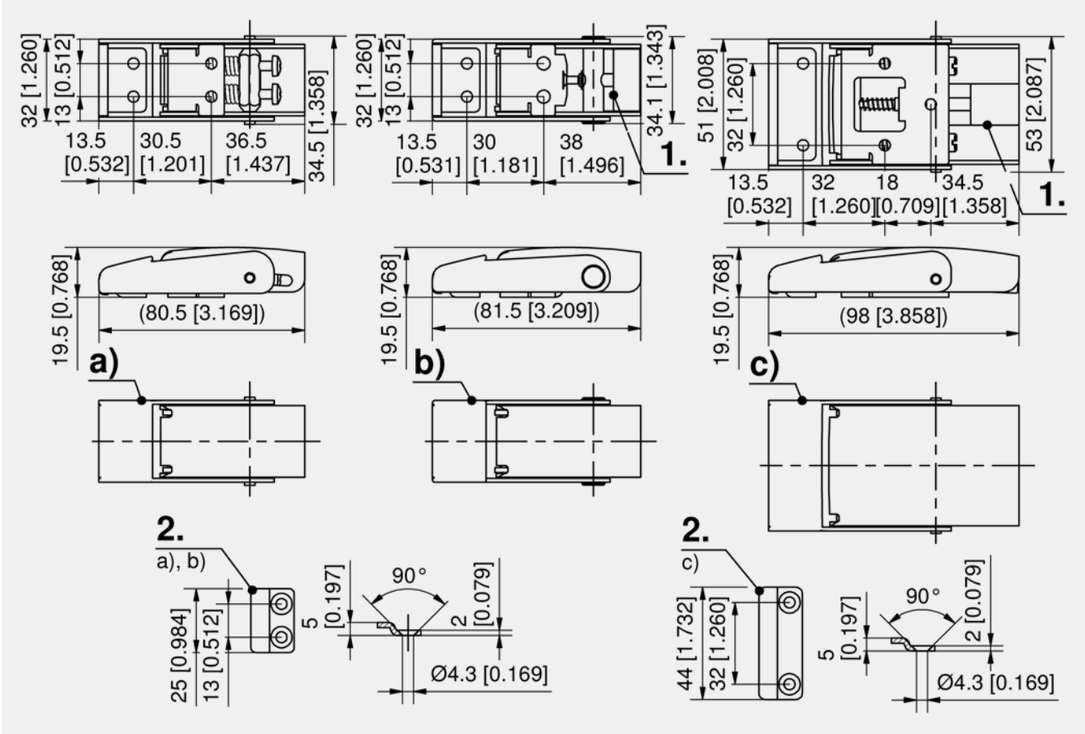

Over center toggle latch

	Part Number	Dimension	Push button release	Delivery Unit
a)	259-9001.00-00000	80 x 32		1 pc.
b)	259-9101.00-00000	82 x 32	Yes	1 pc.
c)	259-9102.00-00000	100 x 52	Yes	1 pc.

all product details ▸ on DIRAK.com
7-320

Over Center Toggle Latch with Spring Clip Stainless Steel [7-320.01]

RoHS WEEE

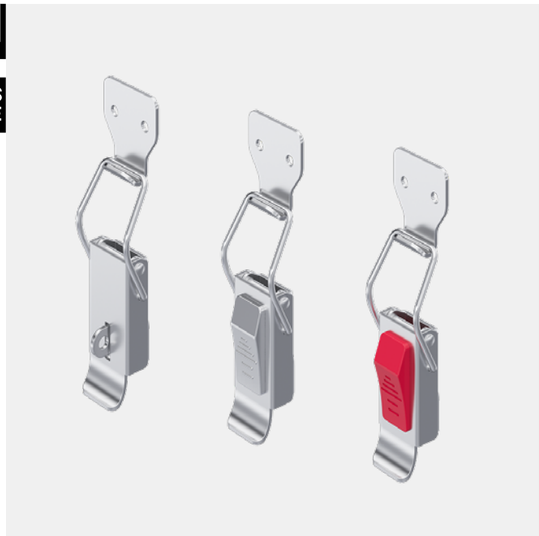

Advantages

- Secure tightening and locking of two components.
- Clamping takes place viathe dead center override.
- Version a) release push button with recessed riffle, stainless steel, Version b) release push button with raised riffle, ABS Version c) with padlock eye.
- Vibration-proof version a) and b).
- Catch hooks included.
- The surface of the over center toggle latches is satin polished.

Materials

- **Toggle Latch:** AISI 304
- **Release slider:** AISI 304 or ABS, red

Remarks

1. release slider
2. padlock eye

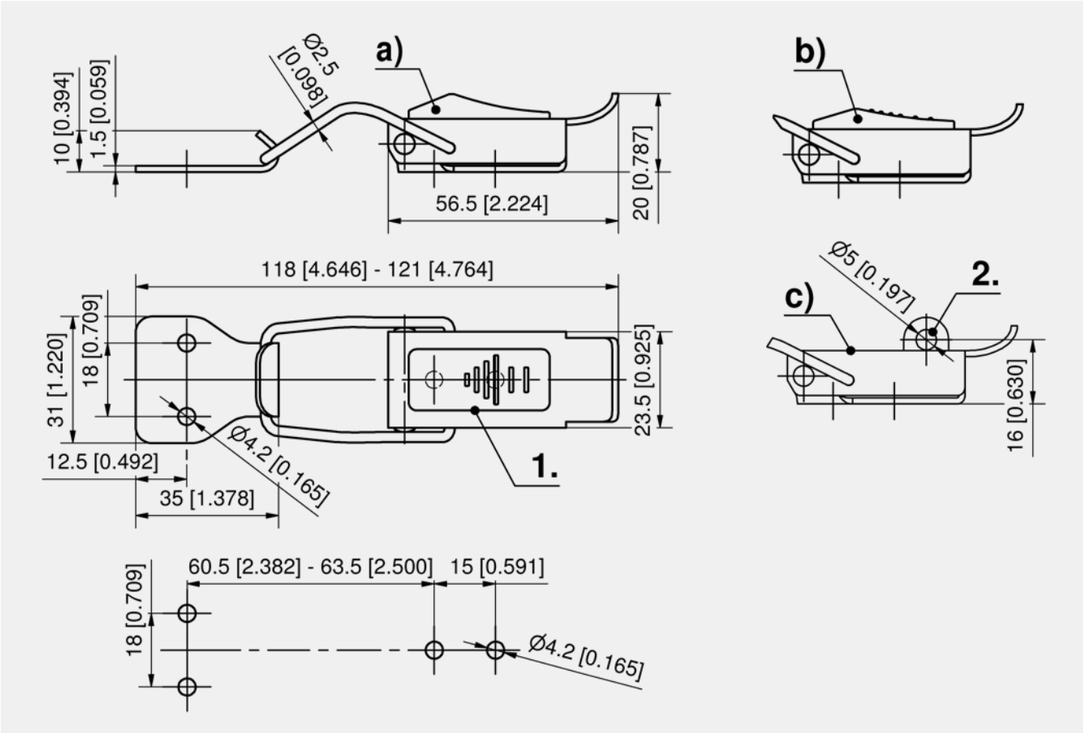

Over center toggle latch

	Part Number	Version	Delivery Unit
a)	350-2080.00-00000	with stainless steel release slider and recessed riffle	25 pcs.
b)	350-2080.00-00001	with ABS release slider and raised riffle	25 pcs.
c)	350-2080.00-00002	with eyelet for padlock	25 pcs.

7-320.01

◂ all product details on DIRAK.com

Over Center Toggle Latch PA [6-240]

Advantages

- Secure tightening and locking of two components.
- Clamping takes place via the dead center override.
- Clip-in / tool-less assembly.
- Max. closing force 250N.
- For sheet metal thicknesses from 1.2 to 3mm.
- Catch hook included.

Materials

- **Over center toggle latch, catch hook:** PA, black

Remarks

1. guide the closing hook and the latch under the door panel and clip them in place.
2. hook the latch into the closing hook.
3. press the latch down and tighten it.

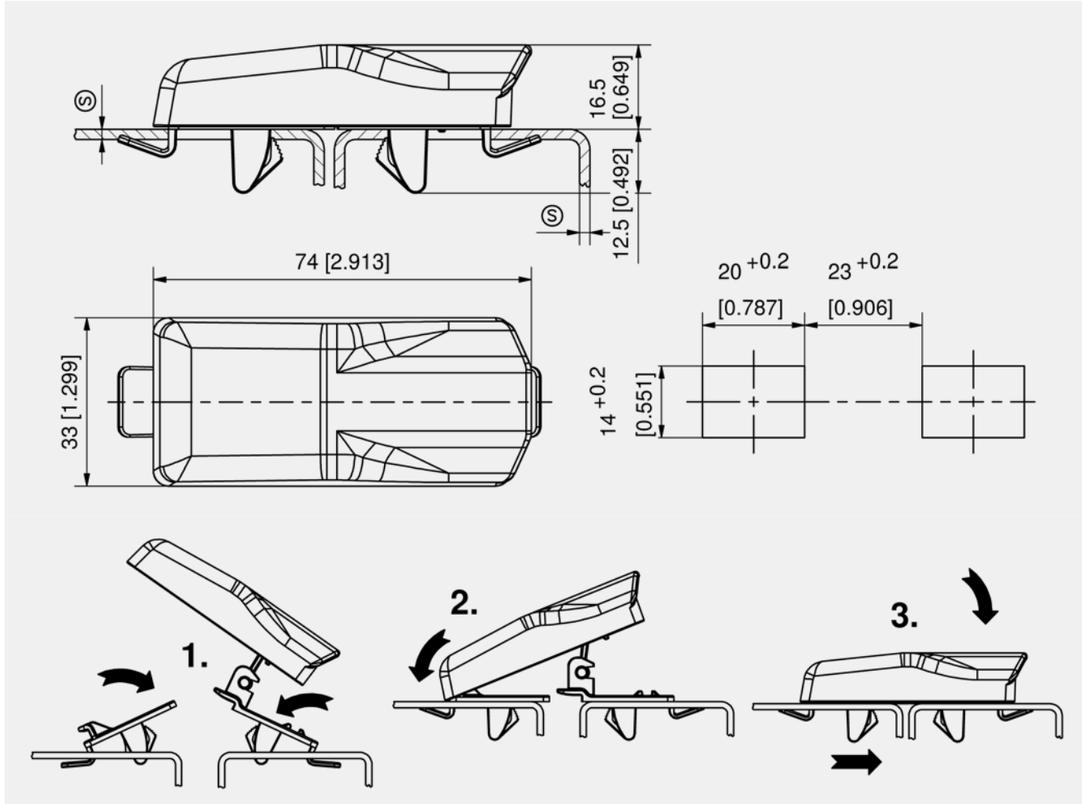

Over center toggle latch PA

Part Number	Dimension	Installation type	Delivery Unit
259-9103.00-00000	74 x 33 mm	tool-less	10 pcs.

all product details ▸ on DIRAK.com

6-240

Pull Latch Handle

[1-068]

Advantages

- The pull latch handle is used by the 19" rack industry for locking insertions.
- The completely pre-assembled unit is fastened by a countersunk screw M4.
- When inserting the pull latch, the free running slam hook slides into the cutout of the door to keep the latch from rotating. (3.)
- Pulling on the handle will unlock the drawer, enabling it to be pulled out. (4.)
- RH / LH application.

Materials

- **Housing and handle:** zinc die, matte chrome plated
- **Spring for insert:** spring steel
- **Hook:** sintered steel, zinc plated

Remarks

(S) Door-thickness max. 5mm

1. cutout handle

2. alternative cutouts for locking hole

The countersunk screw is not included.

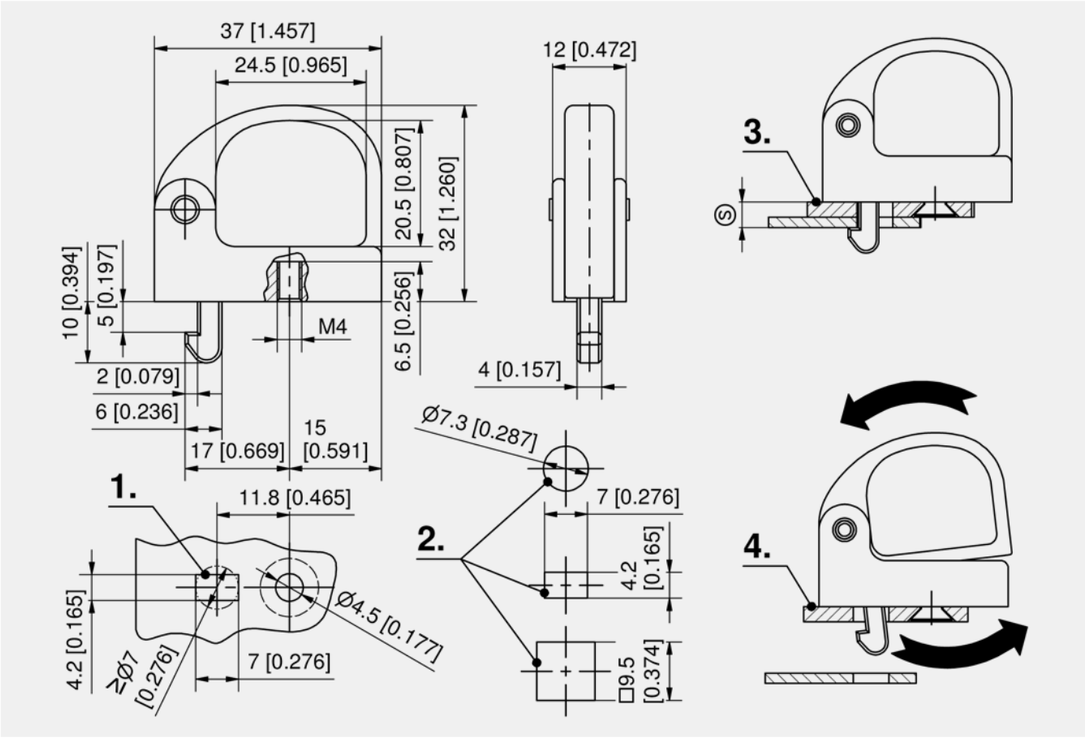

Pull latch handle

Part Number	Installation type	Delivery Unit
280-9101.00-00000	screw-on	1 pc.

1-068
◂ all product details on DIRAK.com

DST Pull Latch Handle

[1-069DST]

Advantages

- The pull latch handle with DIRAK-SNAP-Technology is used by the 19" rack industry.
- Tool-less installation.
- When inserting the pull latch, the free running slam hook slides into the cutout of the door to keep the latch from rotating.
- By tilting the handle, the hook is removed from the cutout, enabling the drawer to be pulled out by the handle. The asymmetrical design allows the handle to tilt when it is pulled.
- RH / LH application.

Materials

- **Housing and handle:** zinc die, matte chrome plated
- **Spring for insert:** spring steel
- **Snap wedges and hook:** sintered steel, zinc plated

Remarks

This cutout guarantees a unique and constant fitting.

1. bulge for correct positional installation

2. cutout door

3. cutout frame

4. pushing in

5. locked

6. unlocked

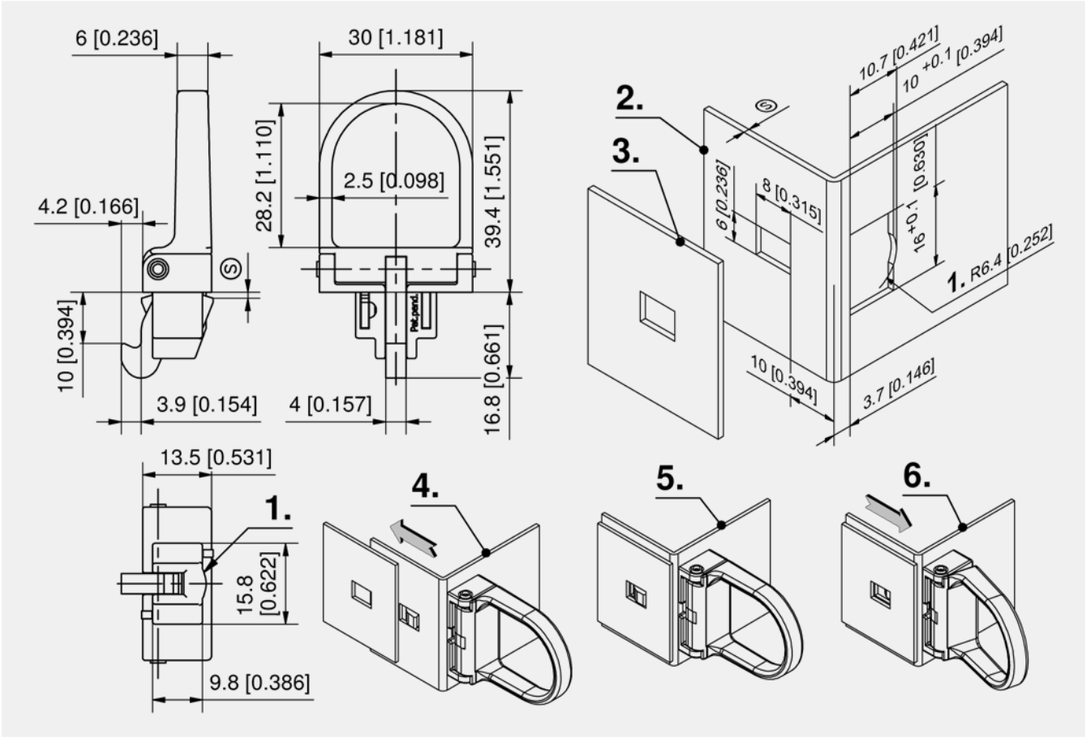

Pull latch handle

Part Number	Clamping range (S)	Installation type	Delivery Unit
480-9002.00-00810	0.8 - 1.0 mm	tool-less	1 pc.
480-9002.00-01113	1.1 - 1.3 mm	tool-less	1 pc.
480-9002.00-01416	1.4 - 1.6 mm	tool-less	1 pc.

all product details ▸ on DIRAK.com
1-069DST

DST Clamping Latch

[1-070DST]

Advantages

- Mini clamping latch with DIRAK-SNAP-Technology and indicator.
- ~7.5mm compression stroke (1.).
- Tool-less installation.
- The knob can also be controlled by a Phillips screwdriver.
- The direction of opening/closing is clearly marked on the housing.
- By turning the knob, the cam is put into the latched position. Once latched, a further turning of the knob makes the cam start its compression feature.
- RH and LH version.

Materials

- **Housing:** zinc die, matte chrome plated
- **Insert:** steel, matte chrome plated
- **Washer and straight cam:** steel, zinc plated
- **Spring:** stainless steel
- **Snap wedges:** sintered steel, zinc plated

Remarks

The latching and compression operation for the RH version is clockwise, for the LH version counterclockwise.

2. open

3. cam pivoted

4. cam compressed

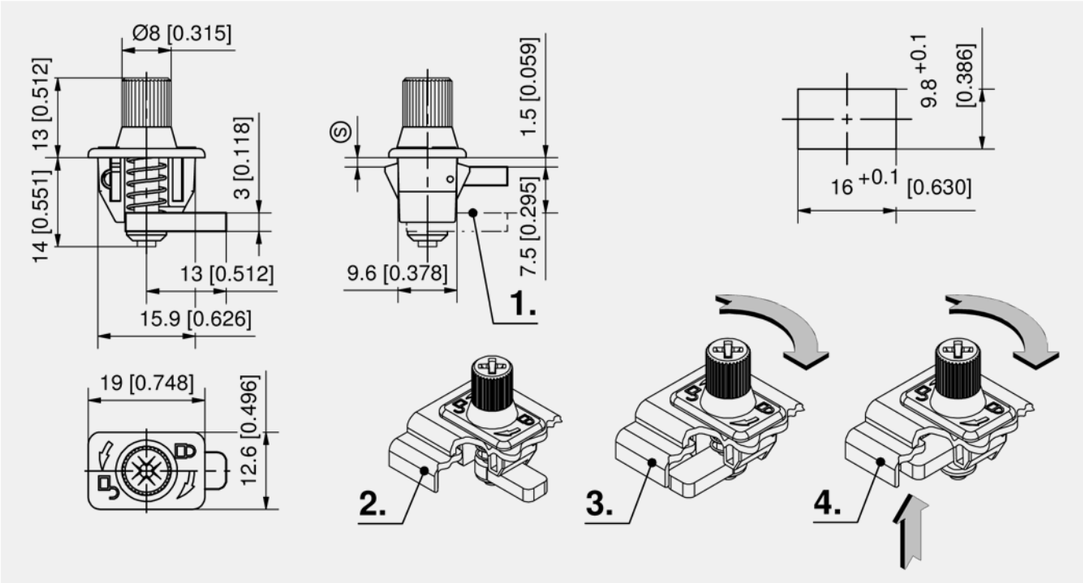

Mini compression latch

Part Number	Version	Clamping range (S)	Closing stroke	Installation type	Delivery Unit
448-9001.00-00810	RH version	0.8 - 1.0 mm	clockwise	tool-less	1 pc.
448-9001.00-01113	RH version	1.1 - 1.3 mm	clockwise	tool-less	1 pc.
448-9001.00-01416	RH version	1.4 - 1.6 mm	clockwise	tool-less	1 pc.
448-9002.00-00810	LH version	0.8 - 1.0 mm	counter clockwise	tool-less	1 pc.
448-9002.00-01113	LH version	1.1 - 1.3 mm	counter clockwise	tool-less	1 pc.
448-9002.00-01416	LH version	1.4 - 1.6 mm	counter clockwise	tool-less	1 pc.

1-070DST

◂ all product details on DIRAK.com

DST Clamping Latch

[1-072DST]

Advantages

- Mini clamping latch with indicator red/green.
- The indicator stays visible and is not concealed in any fitted situation.
- ~6mm compression stroke. (1.)
- Tool-less installation.
- Hand turning knob operated.
- In open position the indicator shows "red".
- By turning the knob, the cam is put into the latched position and the "green" indicator appears. Once latched, a further turning of the knob makes the cam start its compression feature.
- RH / LH application.

Materials

- **Housing, sleeve:** zinc die, matte chrome plated or black coated
- **Insert:** steel, matte chrome plated or black coated
- **Washers:** steel, zinc plated
- **Spring:** stainless steel
- **Cam and snap wedges:** sintered steel, zinc plated

Remarks

2. open, indicator red

3. cam latched, not pulled-down, indicator green

4. cam pulled-down, closed, indicator green

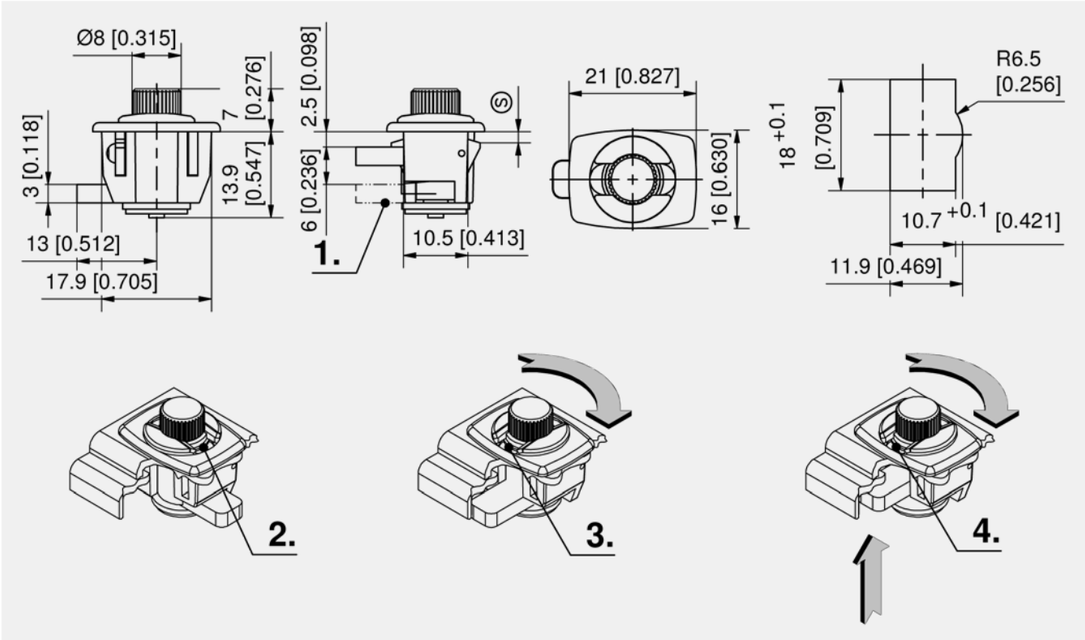

Clamping latch with hand turning knob

Part Number	Clamping range (S)	Surface	Installation type	Delivery Unit
448-9007.00-00810	0.8 - 1.0 mm	matte chrome plated	tool-less	1 pc.
448-9007.00-01113	1.1 - 1.3 mm	matte chrome plated	tool-less	1 pc.
448-9007.00-01416	1.4 - 1.6 mm	matte chrome plated	tool-less	1 pc.
448-9014.00-00810	0.8 - 1.0 mm	black	tool-less	1 pc.
448-9014.00-01113	1.1 - 1.3 mm	black	tool-less	1 pc.
448-9014.00-01416	1.4 - 1.6 mm	black	tool-less	1 pc.

all product details ▸ on DIRAK.com

1-072DST

Dual Ball Catch

[6-130]

RoHS WEEE

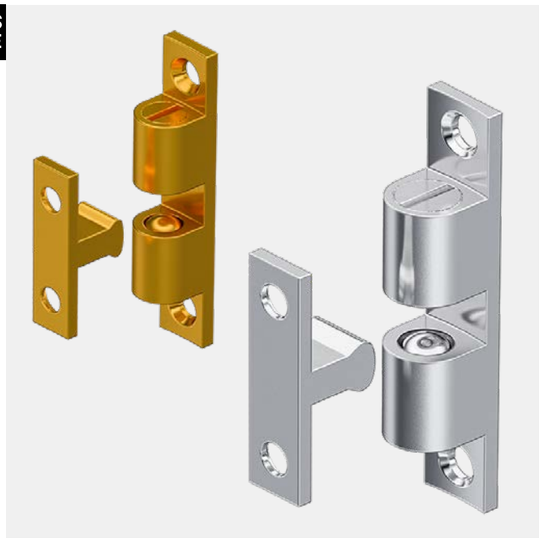

Advantages

- Dual ball catch, screw-on.

Materials

- **Ball catch and counterpart:** brass or brass, chrome plated
- **Springs and balls:** stainless steel

Remarks

1. alternative turned 90°

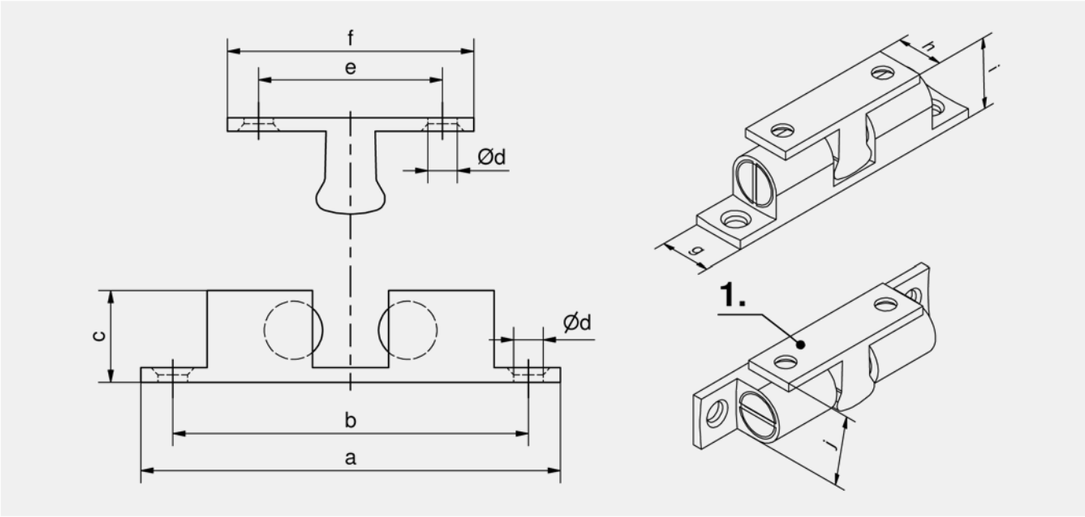

Ball catch + counter part, brass

Part Number	a	b	c	d	e	f	g	h	i	j	Delivery Unit
263-9001.00-00000	44 mm	35 mm	9.4 mm	3.5 mm	15.2 mm	24.7 mm	8 mm	6.6 mm	11.8 mm	10.4 mm	10 pcs.
263-9002.00-00000	49 mm	39.8 mm	10.6 mm	3.8 mm	19.8 mm	28.8 mm	8.8 mm	7.6 mm	13.2 mm	11.4 mm	10 pcs.
263-9003.00-00000	59.8 mm	49.8 mm	13.2 mm	4.8 mm	24 mm	34.8 mm	11.2 mm	9.2 mm	15.9 mm	13.9 mm	10 pcs.
263-9004.00-00000	68.4 mm	58 mm	15 mm	4.8 mm	30 mm	40.2 mm	13 mm	12 mm	18.1 mm	16.1 mm	10 pcs.

Ball catch + counterpart, brass, chrome plated

Part Number	a	b	c	d	e	f	g	h	i	j	Delivery Unit
263-9007.00-00000	44 mm	35 mm	9.4 mm	3.5 mm	15.2 mm	24.7 mm	8 mm	6.6 mm	11.8 mm	10.4 mm	10 pcs.
263-9008.00-00000	49 mm	39.8 mm	10.6 mm	3.8 mm	19.8 mm	28.8 mm	8.8 mm	7.6 mm	13.2 mm	11.4 mm	10 pcs.
263-9009.00-00000	59.8 mm	49.8 mm	13.2 mm	4.8 mm	24 mm	34.8 mm	11.2 mm	9.2 mm	15.9 mm	13.9 mm	10 pcs.
263-9010.00-00000	68.4 mm	58 mm	15 mm	4.8 mm	30 mm	40.2 mm	13 mm	12 mm	18.1 mm	16.1 mm	10 pcs.

6-130
◂ all product details on DIRAK.com

Slam Lock

[6-120]

RoHS WEEE

Advantages

- Robust, screw-on slam lock.

Materials

- **Slam lock:** steel, zinc plated

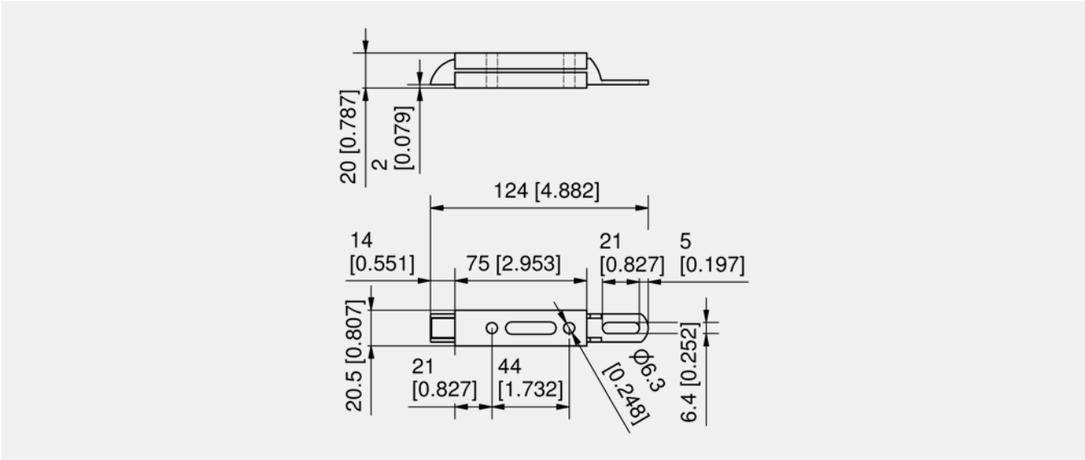

Slam lock

Part Number	Installation type	Delivery Unit
229-9001.00-00000	screw-on	10 pcs.

all product details ▸ on DIRAK.com
6-120

Flush Mounted Trap-Door Latch

[6-1381]

RoHS WEEE

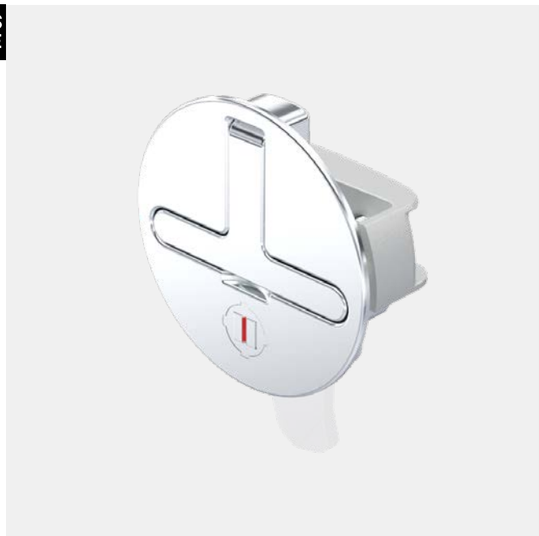

Advantages

- Flush mounted trap-door latch with integrated T-handle and safety insert.
- Vibration-proof design.
- T-handle with 95° opening angle.
- Width of T-handle 25mm.
- T-handle with rubber stop to prevent rattling.
- Encasement surface perfectly smooth to prevent dirt deposits.
- Mounted with fastening bracket with two M6 allen screws DIN EN ISO 4762.
- Cutout with anti-twist safeguard.
- Also available without locking device (only flush-mounted T-handle).

Materials

- **Housing and T-handle:** zinc die, chrome plated

b)

- **Insert:** AISI 303

c)

- **Insert:** zinc die, chrome plated

Remarks

The door-thickness (S) amounts to max. 6mm with the screw provided M6x16.

1. fastening bracket
2. spring-loaded link
3. locking device for T-handle

Attention:

H-dimension L=35 cam ≥14mm

H-dimension L=45 cam ≥14mm

Only for use with cams part-no. 200-06XX and 200-04XX!

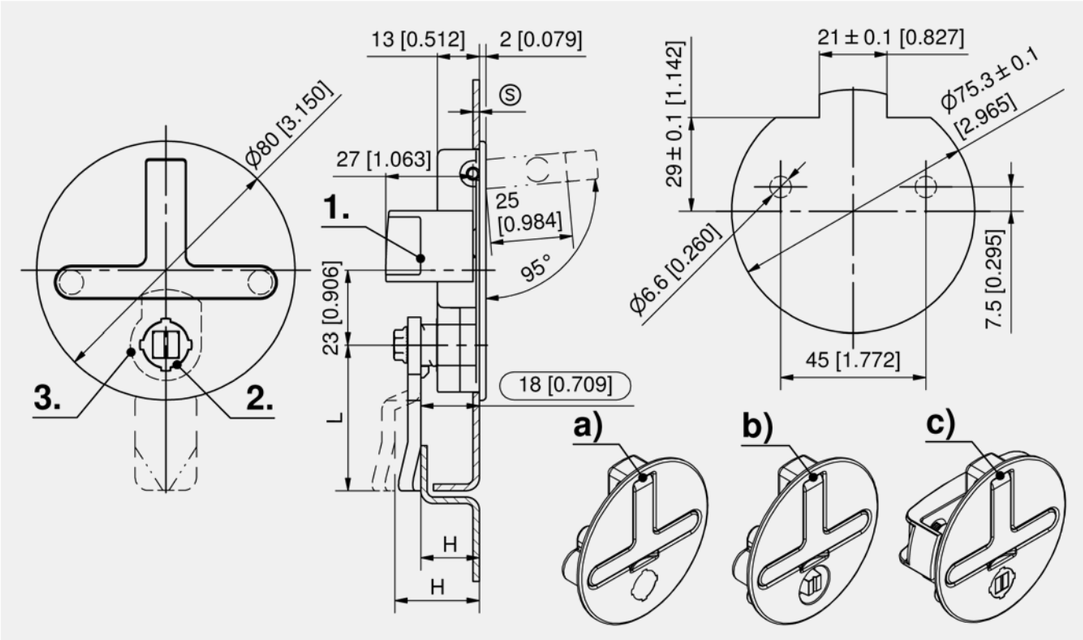

Trap-door latch

	Part Number	Insert	Version	Installation type	Delivery Unit
a)	213-9401.00-00000	without	without Fixing bracket	screw-on	1 pc.
b)	213-9403.00-00000	Conical square 9mm	without Fixing bracket and without spring-loaded link	screw-on	1 pc.
c)	213-9402.00-00000	Square 8mm	with fixing bracket and cylinder head screws M6x16	screw-on	1 pc.

+	Accessories
154, 292	1-102 **Cams L35/45 Steel**
769	204-0103.00-00000 **Wrenches**
766	204-0701.07-07500 **Universal key for Inserts**
770	204-0702.80-00000 **Rail Keys**

6-1381

◂ all product details on DIRAK.com

Slam Latch Stainless Steel

[7-330]

Advantages

- Flush slam latch with free stroke.
- The recessed grip below the lever allows an easy access for operating the lever.
- For unlocking (5.) the lever has to be opened about 45°, the spring loaded lever automatically returns to the flush position.
- By the finger-pull on the latch, unlocking from inside is possible.

Materials

- **Housing, handle and latch:** AISI 316, surface polished
- **Screw, cam angle, pin and spring:** stainless steel
- **Spacer:** nylon, black

RoHS WEEE

Remarks

(S) Door-thickness max. 15mm.

By omitting the front packing plate the height dimension (S) can be increased by 3.4mm.

1. cam angle, included
2. fastening screws 8-32 UNC x 22, for thinner door-thicknesses (S) please cut the screw accordingly.
3. cutout Ø52mm
4. base plates

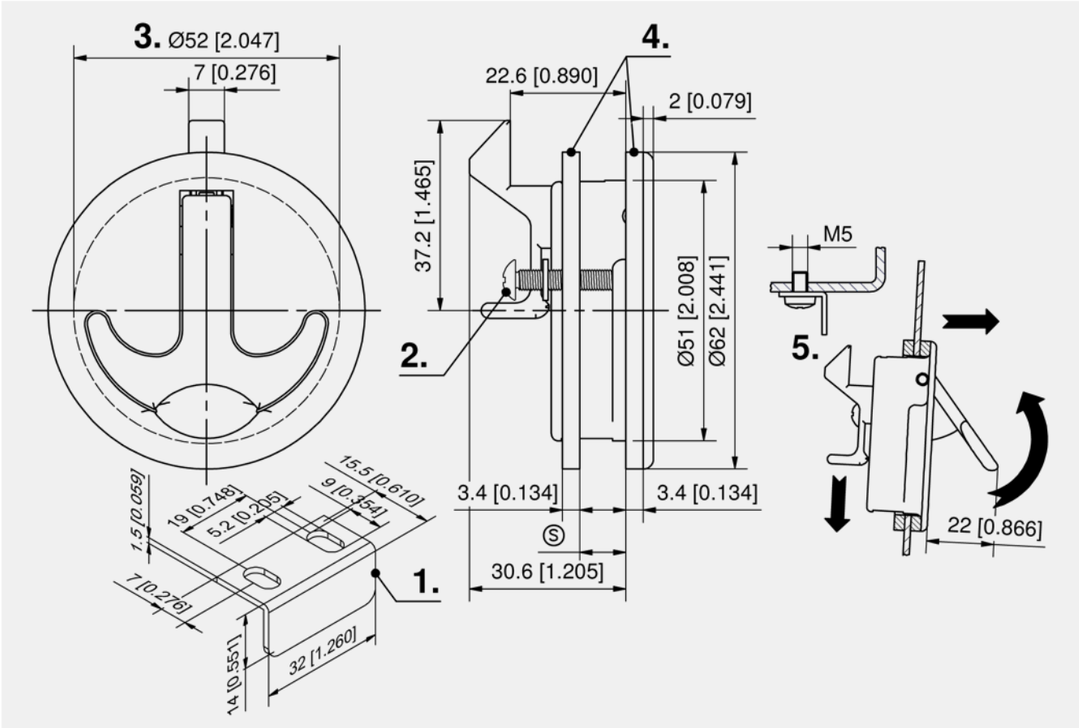

Slam latch

Part Number	Cutout	Installation type	Delivery Unit
282-9601.00-00000	Ø52	screw-on	1 pc.

all product details ▸ on DIRAK.com

7-330

DST Pullhandle with Slam-Hook PrC

[2-060DST]

Advantages

- Pullhandle with slam-hook with DIRAK-SNAP-Technology.
- RH / LH application.
- A non-locked handle has a detent in the door-dish.

Materials

- **Dish:** PA, black
- **Handle:** zinc die, black
- **Bolt/hook:** zinc die, untreated
- **Pin:** steel, zinc plated
- **Snap wedges and locking cylinder:** PA

Remarks

Installation: hook lower part into the lower cutout. Snap top part into the upper cutout with a simple push.

Opening operation: unlock handle and pull handle by 35°.

Closing operation: push handle into the dish, lock the barrel and slam the door closed. (the spring- loaded hook is free- running)

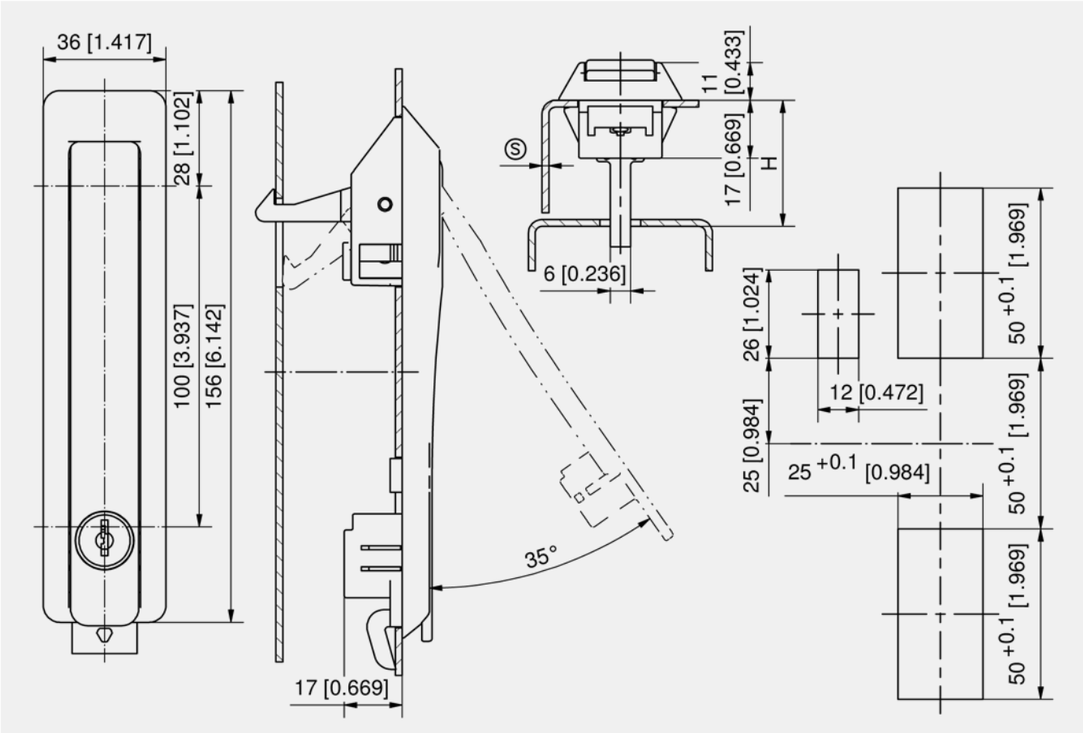

Pullhandle with slam-hook

Part Number	Clamping range (S)	Latching type	H	Installation type	Delivery Unit
407-9402.00-37015	1.2 - 1.7 mm	keyed alike DIRAK 1333	37 mm	tool-less	1 pc.
407-9401.00-37015	1.2 - 1.7 mm	keyed different	37 mm	tool-less	1 pc.
407-9402.00-37020	1.7 - 2.2 mm	keyed alike DIRAK 1333	37 mm	tool-less	1 pc.
407-9401.00-37020	1.7 - 2.2 mm	keyed different	37 mm	tool-less	1 pc.

	Accessories
764	292-0301.15-00000 **Tool for uninstallation**
764	292-0306.80-02530 **Tool for uninstallation**

2-060DST
◂ all product details on DIRAK.com

Slam Latch

[6-127]

Advantages

- Clip-in slam latch for doors and panels.
- Low profile.
- Tool-less installation.
- Weight:
  without cylinder: 33g
  with cylinder: 46g.

Materials

- **Slam latch:** PA
- **Springs:** spring steel
- **Cylinder:** zinc die
- **Dustcap:** stainless steel, black coated

Remarks

Clamping range (S) 1.5 - 2mm

1. stroke of the latch 6.5mm.

2. slide the latch end into the sheet metal.

3. push the housing into its final position.

Two-step opening process:

4. pressing the trigger button releases the lever and it jumps up. The slam latch stays closed.

5. lifting the lever opens the latch.

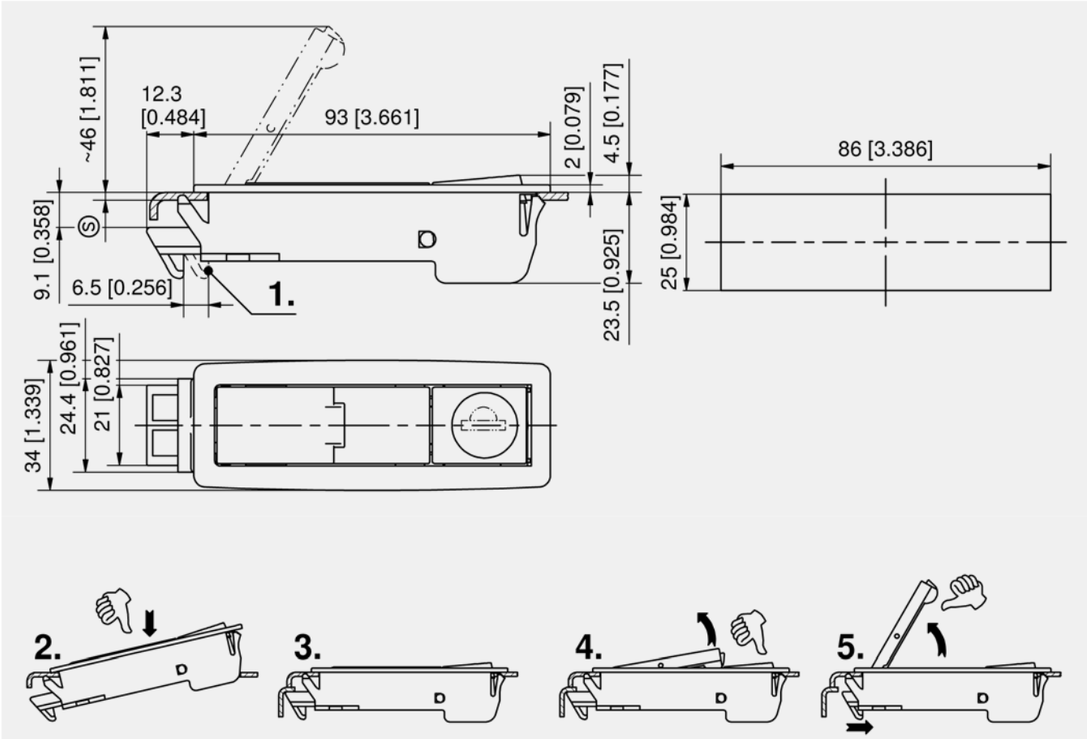

Slam latch

Part Number	Latching type	Installation type	Delivery Unit
282-9501.00-00000		tool-less	1 pc.
282-9502.00-00000	keyed alike DIRAK 1333	tool-less	1 pc.
282-9503.00-00000	keyed different	tool-less	1 pc.

all product details ▸ on DIRAK.com
6-127

Slam Latch

RoHS WEEE

Advantages

- Slam latch consists of two parts (door- and frame-part) for aluminium profiles.
- Due to oblong holes, different profile widths can also be used.
- Gently pulling the handle will disengage the slam-bolt from the frame-part.
- A gentle push will latch the door.
- Version with cylinder is supplied with 2 keys.

Materials

- **Handle, door- and frame-part:** zinc die, chrome plated or black
- **Bolt:** zinc die, untreated
- **Slot nut:** steel, zinc plated

Remarks

1. 4 slot nuts M6 are included in scope of delivery
2. open
3. opened
4. close

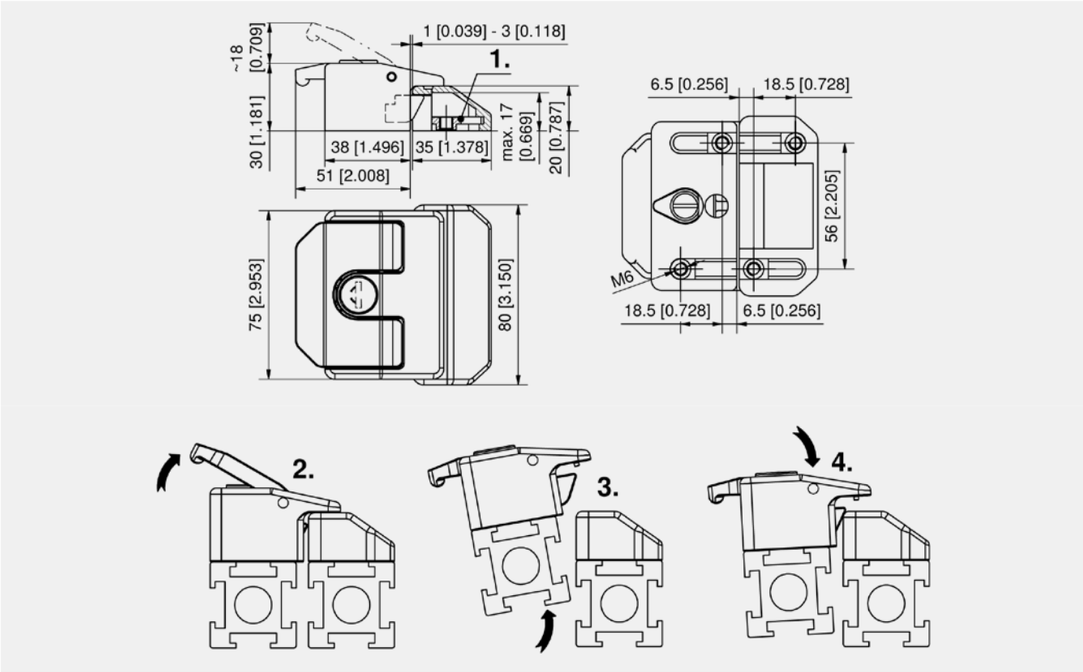

Slam latch, zinc die, chrome plated

Part Number	Latching type	Installation type	Delivery Unit
265-9606.00-00000		screw-on	1 pc.
265-9601.00-00000	keyed alike DIRAK 1333	screw-on	1 pc.
565-9601.00-00000	keyed alike DS200	screw-on	1 pc.
265-9603.00-00000	keyed different	screw-on	1 pc.

Slam latch, zinc die, black

Part Number	Latching type	Installation type	Delivery Unit
265-9605.00-00000		screw-on	1 pc.
265-9602.00-00000	keyed alike DIRAK 1333	screw-on	1 pc.
565-9602.00-00000	keyed alike DS200	screw-on	1 pc.
265-9604.00-00000	keyed different	screw-on	1 pc.

◂ all product details on DIRAK.com
6-150

Slam Latch

RoHS WEEE

Advantages

- Slam latch consists of two parts (bolt and locking element) for aluminium profiles.
- Bolt housing with integrated stop.
- Opening by pushing the grip element.
- Finger-tip grip allows easy opening.
- Self-closing of the door.
- Cannot be opened from the inside.
- Noise reduced.
- Version with cylinder is supplied with 2 keys.

Materials

- **Bold and locking element:** zinc die, black
- **Slot nuts:** steel, zinc plated
- **Cylinder barrel:** PA, black

Remarks

4 slot nuts are included in scope of delivery.

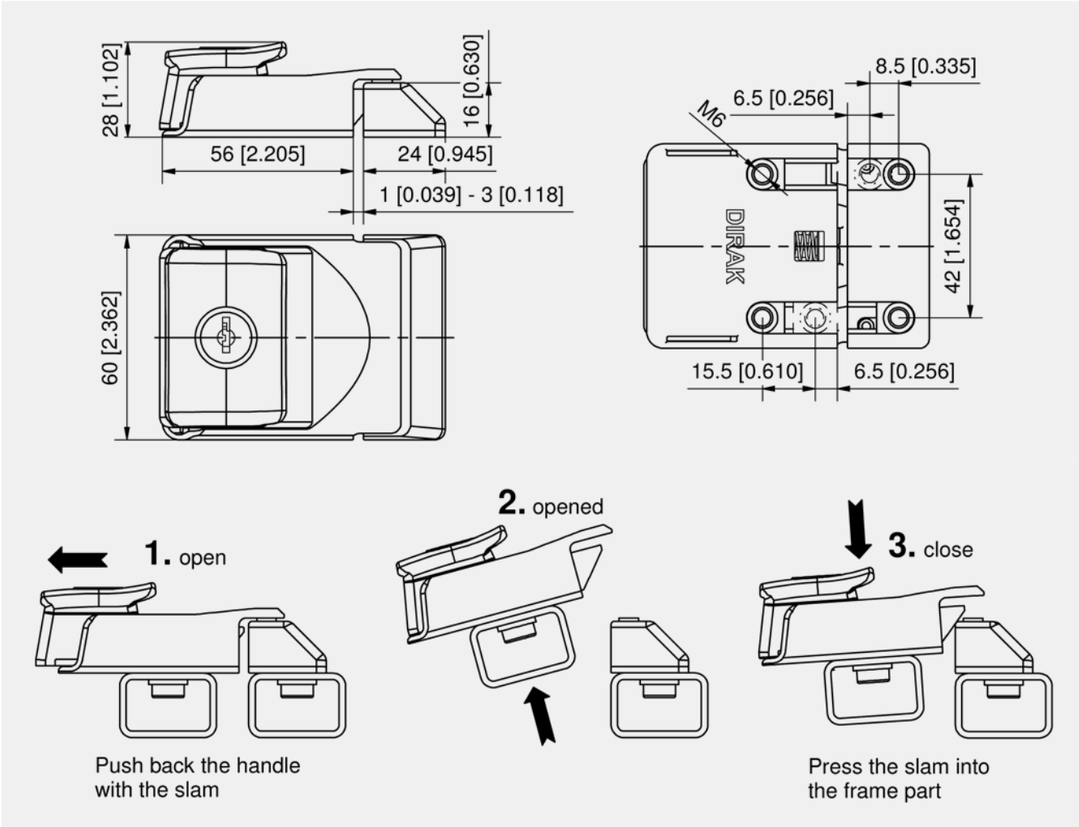

Slam latch, zinc die, black

Part Number	Latching type	Installation type	Delivery Unit
265-9607.00-00001	without lock, with plug	screw-on	1 pc.
265-9607.00-01333	keyed alike DIRAK 1333	screw-on	1 pc.
265-9607.00-99999	keyed different	screw-on	1 pc.

all product details ▸ on DIRAK.com
6-151

DST Slam Latch PrA

[6-125DST]

Advantages

- Low profile slam latch PICCOLO with DIRAK-SNAP-Technology.
- For flush doors, suitable for lighter applications.
- This slam latch is particularly suitable for closing doors and flaps.
- To release after unlocking, just push the upper, clearly marked part of the handle. The lower part then can be pulled-out and this disengages the spring loaded slam-bolt.
- The spring-loaded slam bolt has a free-stroke, allowing slaming of closed and locked handles.

Materials

- **Housing, handle and slam-bolt:** PA, black
- **Cam and pin:** steel, zinc plated
- **Snap wedges:** sintered steel
- **Cylinder:** zinc die, black

Remarks

Installation:

enter slam-side into the cutout first and then snap-in the unit.

Only available with key number 23211.

1. stroke

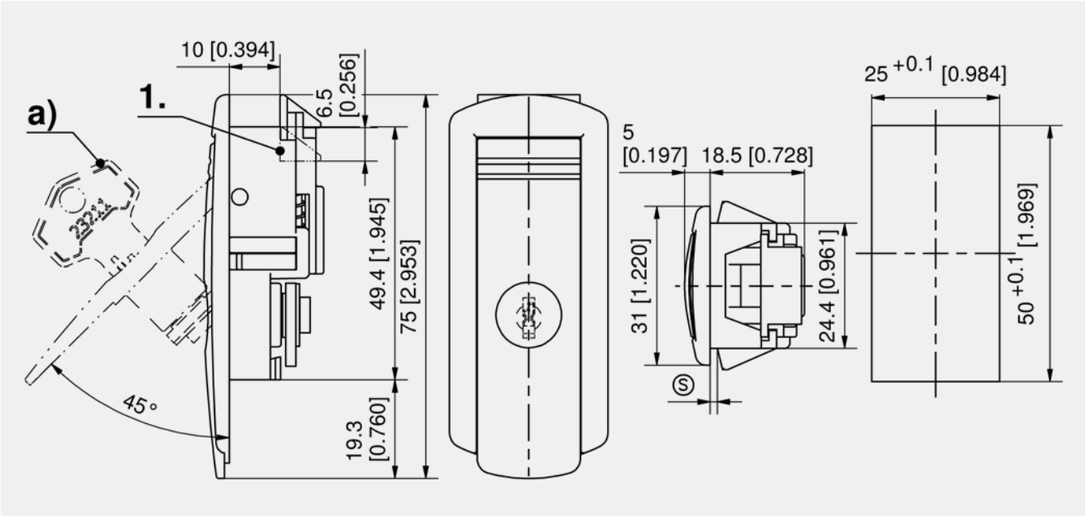

Slam latch

Part Number	Clamping range (S)	Latching type	Version	Installation type	Delivery Unit
482-9001.00-00015	1.2 - 1.7 mm	keyed alike No. 23211	without key	tool-less	10 pcs.
482-9001.00-00020	1.7 - 2.2 mm	keyed alike No. 23211	without key	tool-less	10 pcs.
482-9001.00-00025	2.2 - 2.7 mm	keyed alike No. 23211	without key	tool-less	10 pcs.
482-9002.00-00015	1.2 - 1.7 mm	keyed alike No. 23211	with 2 keys	tool-less	10 pcs.
482-9002.00-00020	1.7 - 2.2 mm	keyed alike No. 23211	with 2 keys	tool-less	10 pcs.
482-9002.00-00025	2.2 - 2.7 mm	keyed alike No. 23211	with 2 keys	tool-less	10 pcs.
482-9003.00-00015	1.2 - 1.7 mm		with blind plug	tool-less	10 pcs.
482-9003.00-00020	1.7 - 2.2 mm		with blind plug	tool-less	10 pcs.
482-9003.00-00025	2.2 - 2.7 mm		with blind plug	tool-less	10 pcs.

+	Specific accessories
	a) 205-9530.00-23211 **2 Keys on ring**

6-125DST
◂ all product details on DIRAK.com

Snap-Lock

[6-122]

Advantages

- This low Snap-lock device is especially suitable for latching of doors and lids.
- Tool-less installation.
- Clip-in for door-tickness 0.8mm to 2.0mm.
- The Snap-lock consists of two parts, housing and latch.
- The latch moves within the housing, keeping the panel free of scratches.
- Recessed finger-pull for opening.
- Vibration-proof according to DIN EN 61373.

Materials

- **Slam bolt and housing:** PA, black
- **Spring:** stainless steel

Remarks

1. cutout for door-thickness 0.8 - 1.6mm
2. cutout for door-thickness 1.7 - 2.0mm
3. installation

4 grip

5. stroke

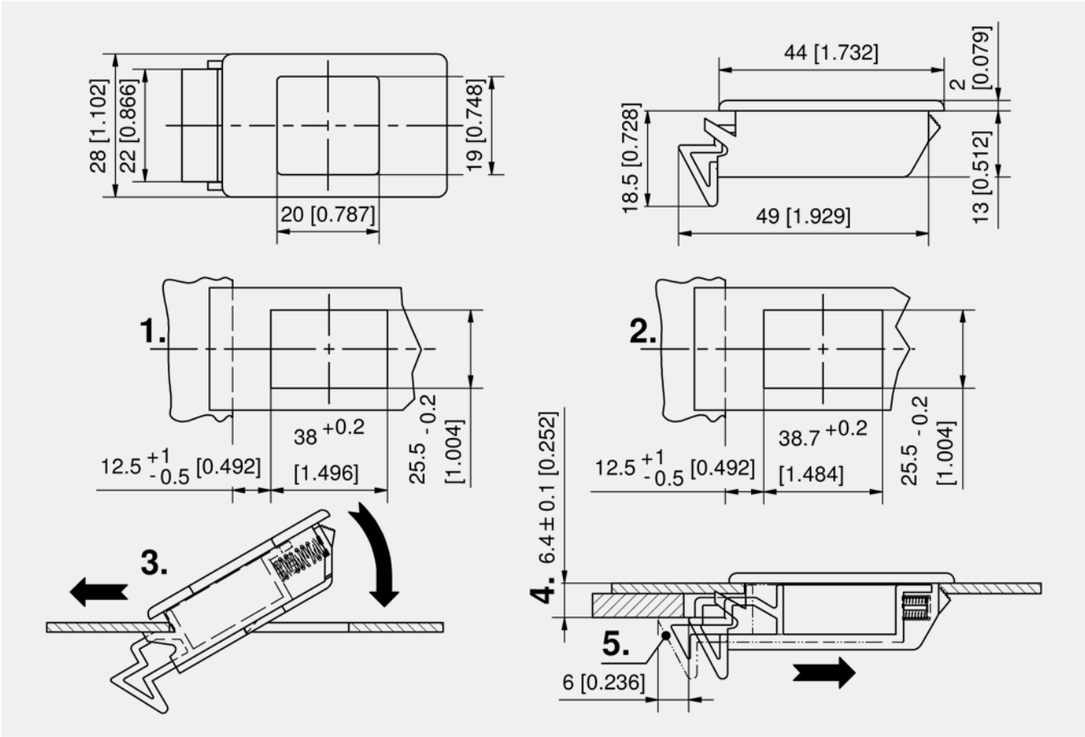

Snap-lock

Part Number	Installation type	Delivery Unit
282-9001.00-00000	tool-less	10 pcs.

all product details ▸ on DIRAK.com
6-122

Bolt Lock for Profile-Cylinder

[6-114]

RoHS WEEE

Advantages

- Plastic bolt lock.

Materials

- **Bolt lock, complete.:** POM, natural

Remarks

Profile-cylinder see product system 2-140 **a)** and **f)**

Install with polyamide lock covers see product system 6-115.

1. stroke

2. mounting hole for M5 screw of profile-cylinder

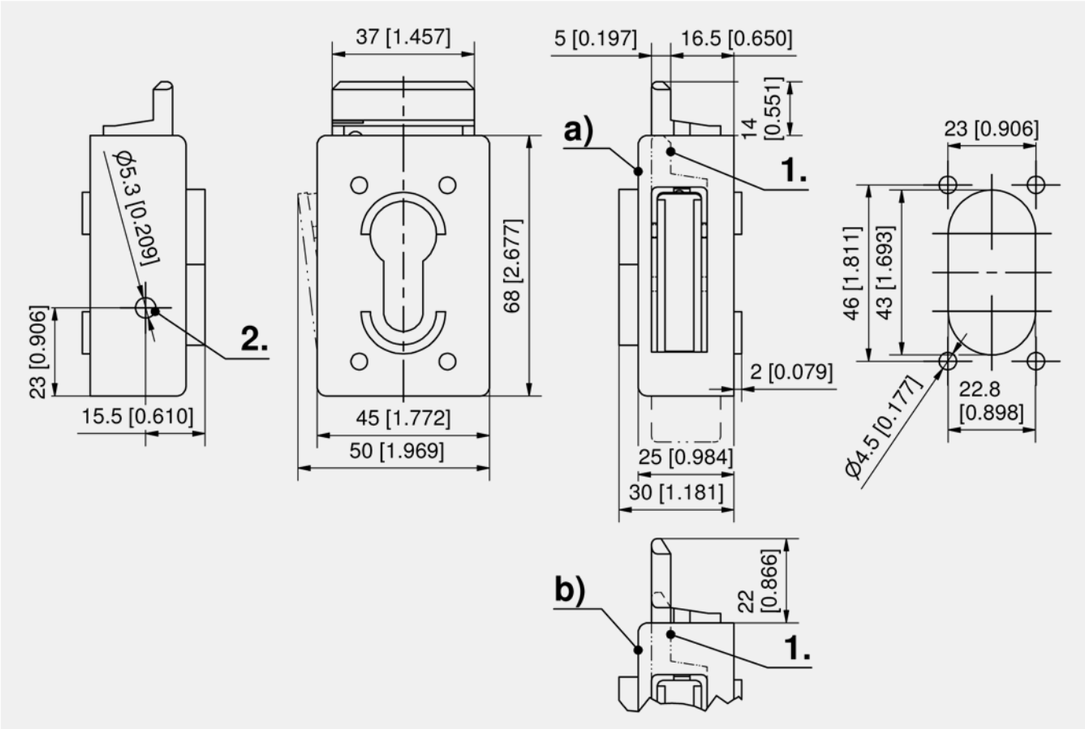

Bolt lock

	Part Number	Version	Delivery Unit
a)	228-9202.00-00000	Bolt 14mm	1 pc.
b)	228-9201.00-00000	Bolt 22mm	1 pc.

6-114

all product details on DIRAK.com

Polyamide Lock Cover

[6-115]

RoHS WEEE

Advantages

- For PHZ or KABA-cylinders and quarter-turns.
- 180° Opening angle.
- Polyamide lock covers c) and d): **170° Opening angle, spring-loaded cover.**
- Cover is locked by quarter-turn with bolt.

Materials

- **Lower part, cover and base plate:** PA, RAL 7032 and RAL 7035.
- Wing knob: PA or brass, nickel plated
- **Shaft:** stainless steel or steel, zinc plated
- **Spring:** stainless steel

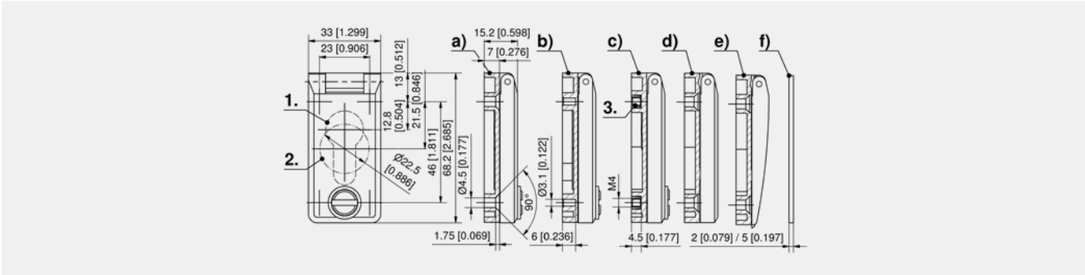

Polyamide lock cover

	Part Number	Application	Surface	Securable	Wing knob	Version	Screwing type	Delivery Unit
a)	237-9001.00-00000	for PHZ	pebbel grey RAL 7032		PA	shaft: stainless steel	with countersunk holes	10 pcs.
a)	237-9031.00-00000	for PHZ	signal white RAL 9003		PA	shaft: stainless steel	with countersunk holes	10 pcs.
a)	237-9051.00-00000	for PHZ	light grey RAL 7035		PA	shaft: stainless steel	with countersunk holes	10 pcs.
a)	237-9101.00-00000	for PHZ	pebbel grey RAL 7032	Yes	brass, nickel plated	shaft: stainless steel	with countersunk holes	10 pcs.
a)	237-9002.00-00000	for round cylinder Ø22 or quarter-turn housing Ø28	pebbel grey RAL 7032		PA	shaft: stainless steel	with countersunk holes	10 pcs.
a)	237-9102.00-00000	for round cylinder Ø22 or quarter-turn housing Ø28	pebbel grey RAL 7032	Yes	brass, nickel plated	shaft: stainless steel	with countersunk holes	10 pcs.
b)	237-8031.00-00000	for PHZ	signal white RAL 9003		PA	shaft: stainless steel	with blind holes Ø3.1	10 pcs.
c)	237-9103.00-00000	for PHZ	pebbel grey RAL 7032	Yes	brass, nickel plated	shaft: stainless steel	with bushings M4	10 pcs.
c)	237-8004.00-00000	for round cylinder Ø22 or quarter-turn housing Ø28	light grey RAL 7035		brass, nickel plated	shaft: steel, zinc plated	with bushings M4	10 pcs.
c)	237-9154.00-00000	for round cylinder Ø22 or quarter-turn housing Ø28	light grey RAL 7035	Yes	brass, nickel plated	shaft: stainless steel	with bushings M4	10 pcs.
d)	237-8002.00-00000	for PHZ	pebbel grey RAL 7032		without, spring loaded	shaft: stainless steel	with countersunk holes	10 pcs.
d)	237-9303.00-00000	for round cylinder Ø22 or quarter-turn housing Ø28	pebbel grey RAL 7032		without, spring loaded	shaft: stainless steel	with countersunk holes	10 pcs.
e)	237-9304.00-00000	for PHZ	pebbel grey RAL 7032		without, spring loaded	shaft: stainless steel	with countersunk holes	10 pcs.

Spacer

	Part Number	Application	Version	Surface	Delivery Unit
f)	237-0401.06-07032	for Ø22, PHZ	5mm thick	pebbel grey RAL 7032	10 pcs.
f)	237-0401.06-07035	for Ø22, PHZ	5mm thick	light grey RAL 7035	10 pcs.
f)	237-0401.06-09003	for Ø22, PHZ	5mm thick	signal white RAL 9003	10 pcs.
f)	237-0402.06-07032	for PHZ	2mm thick	pebbel grey RAL 7032	10 pcs.

all product details on DIRAK.com

6-115

Slam Latch for Profile-Cylinder

[6-111]

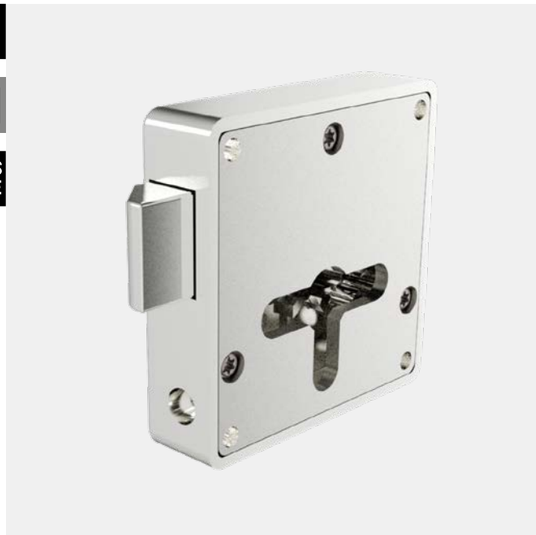

Advantages

- RH / LH or vertical / horizontal application.
- Lock cylinder can be adjusted to accomodate different latch mounting positions.
- Profile-cylinder with lengths of 40 and 45mm and cam acc. to DIN 18252 can be used.
- Pull back of the latch bolt by rotation of the key.
- Closing is possible by self-locking of the latch bolt with free stroke.

Materials

- **Slam latch:** zinc die, zinc plated
- **Latch bolt:** spheroidal graphite, cast iron

Remarks

Please order separately:

profile-cylinder, lock support and lock cover

Installation with 4 carriage bolts or weld-studs M5.

1. stroke
2. latch bolt
3. plug

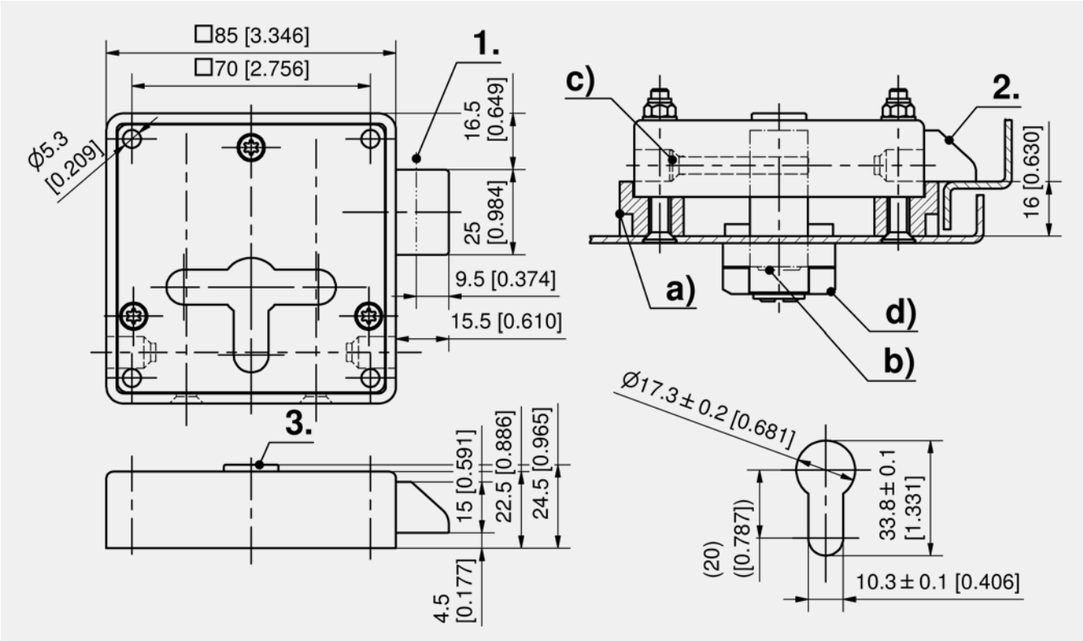

Slam latch for profile-cylinder

Part Number	Version	Installation type	Delivery Unit
229-9111.00-00000	LH door	screw-on	1 pc.
229-9112.00-00000	RH door	screw-on	1 pc.

	Accessories
a)	429 6-111.03 **Lock Support for Slam Latch**
b)	304, 388 211-9003.00-00000 **DIRAK Profile-cylinder**
b)	304, 388 211-9004.00-00000 **DIRAK Profile-cylinder**
c)	755 860-0965.00-00540 **Countersunk screw**
d)	425 6-115 **Polyamide Lock Cover**

6-111
all product details on DIRAK.com

Slam Latch for two Profile-Cylinder

[6-111.01]

Advantages

- Profile-cylinder with lengths of 40/45mm and cam acc. to DIN 18252 can be used.
- Two profile-cylinder allow opening by each cylinder without unlocking the other one.
- Made of spheroidal graphite cast iron to ensure high wear resistance.
- Use of different keys and profile-cylinders possible.
- Closing is possible by self-locking of the latch bolt with free stroke.

Materials

- **Slam latch:** zinc die, zinc plated
- **Latch bolt:** spheroidal graphite, cast iron

Remarks

Please order separately:

profile-cylinder, lock support and lock cover

Installation with 4 carriage bolts or weld-studs M5.

1. stroke
2. latch bolt
3. plug

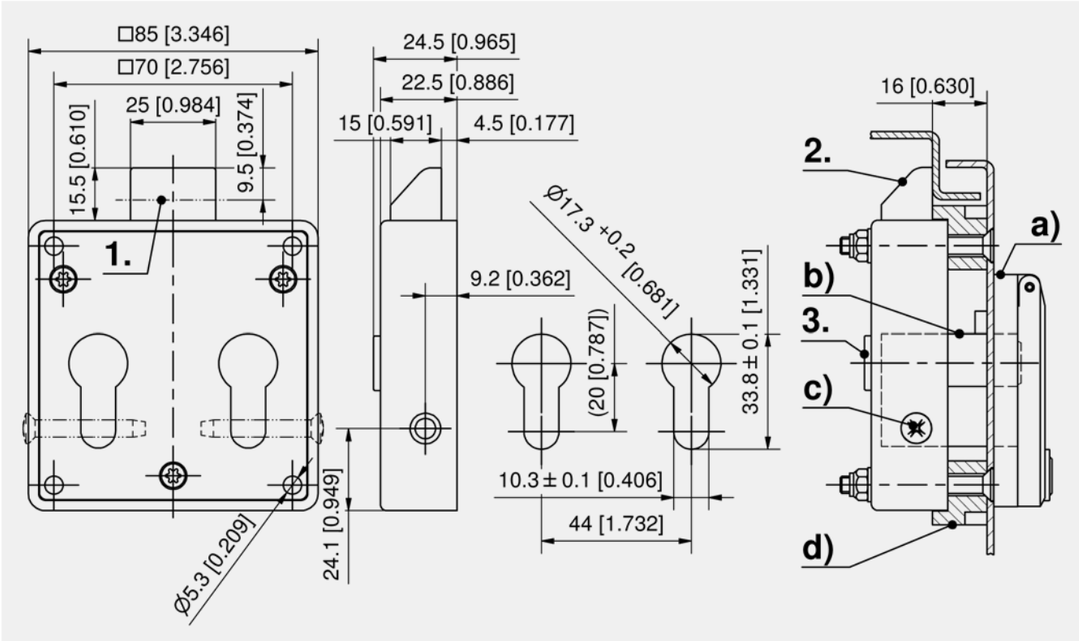

Slam latch for profile-cylinder

Part Number	Installation type	Delivery Unit
229-9113.00-00000	screw-on	1 pc.

	Accessories
a)	425 6-115 **Polyamide Lock Cover**
b)	304, 388 211-9003.00-00000 **DIRAK Profile-cylinder**
b)	304, 388 211-9004.00-00000 **DIRAK Profile-cylinder**
c)	755 860-0965.00-00540 **Countersunk screw**
d)	429 6-111.03 **Lock Support for Slam Latch**

all product details on DIRAK.com
6-111.01

Slam Latch for Insert

[6-111.02]

RoHS WEEE

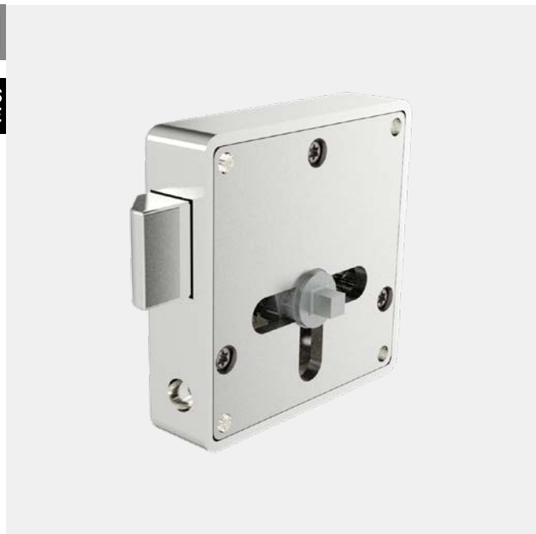

Advantages

- RH / LH or vertical / horizontal application.
- Pull back of the bolt by rotation of the insert.
- Closing is possible by self-locking of the latch bolt with free stroke.

Materials

- **Slam latch:** zinc die, zinc plated
- **Latch bolt:** spheroidal graphite, cast iron

Remarks

Please order separately:

insert, lock support, lock cover and serrated screw.

Use of inserts according to product system 2-141.

Installation with 4 carriage bolts or weld-studs M5.

1. stroke
2. latch bolt
3. plug

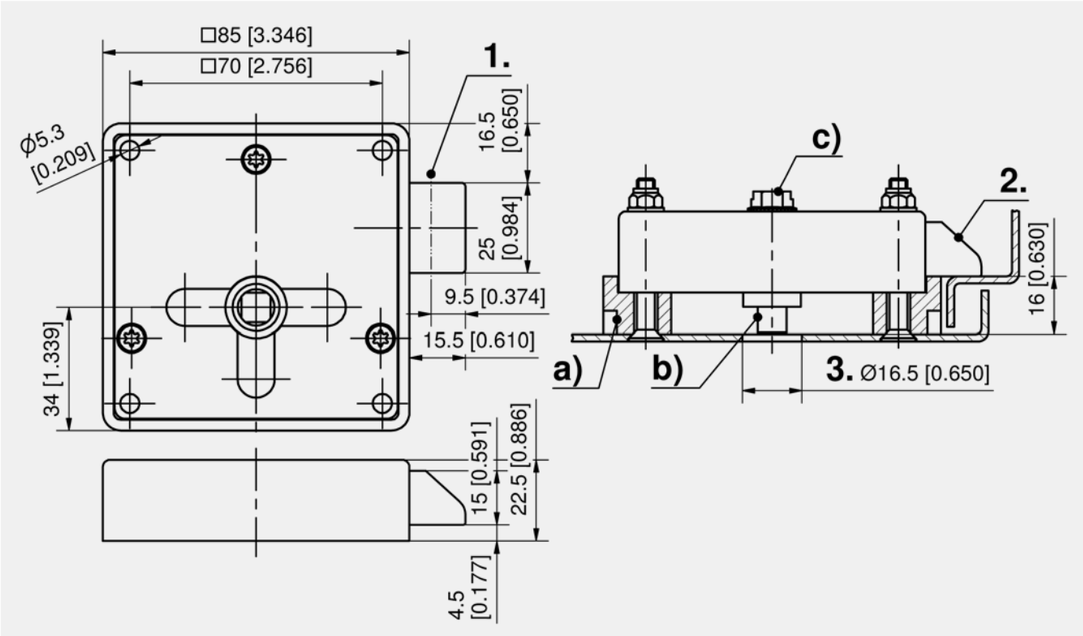

Slam latch for insert

Part Number	Version	Installation type	Delivery Unit
229-9109.00-00000	RH door	screw-on	1 pc.
229-9110.00-00000	LH door	screw-on	1 pc.

		Accessories
a)	429	6-111.03 **Lock Support for Slam Latch**
b)	303	2-141 **Inserts**
c)	754	202-0616.00-00000 **Serrated screw**
	768	6-100 **Wrench**
	766	6-101 **Universal key**
	425	6-115 **Polyamide Lock Cover**

6-111.02
all product details on DIRAK.com

Lock Support for Slam Latch

[6-111.03]

RoHS WEEE

Advantages

- Lock support 229-0504.35-04045 for bending of 11.5 or 16mm.
- Lock support 229-0504.35-04050 for bending of 11.5 or 21mm.

Materials

- **Lock support:** zinc die, untreated

Remarks

1. e.g. lock cover 237-9001
2. PHZ is under the door panel

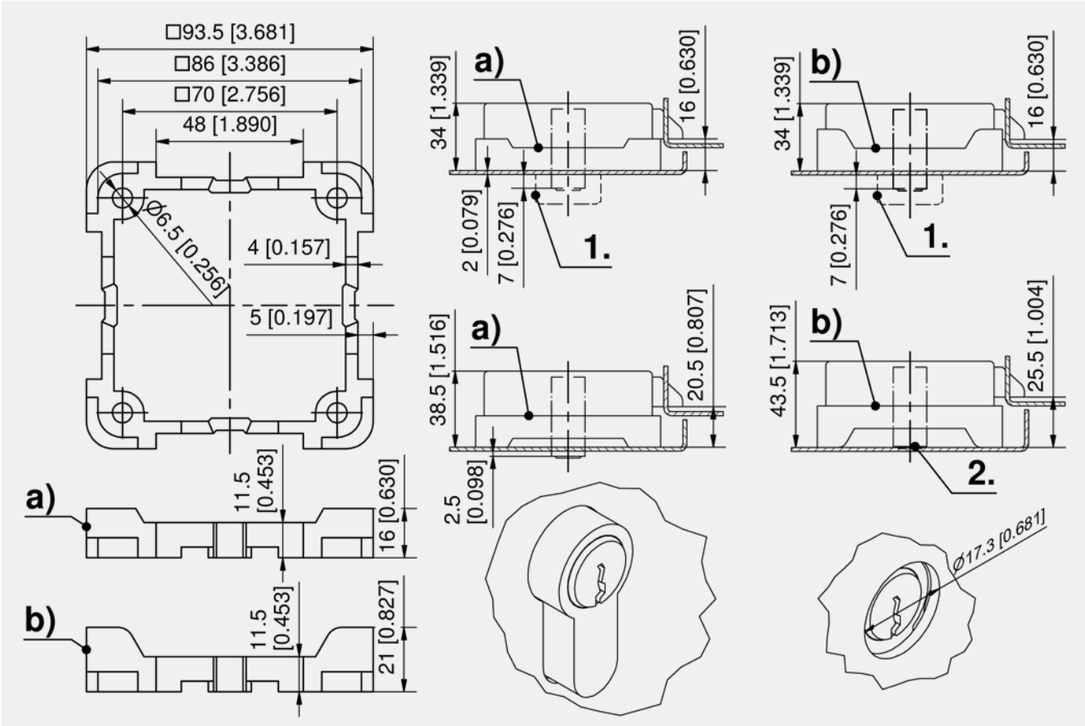

Lock support for slam latch

	Part Number	for bending	Installation type	Delivery Unit
a)	229-0504.35-04045	11,5 or 16mm	screw-on	1 pc.
b)	229-0504.35-04050	11,5 or 21mm	screw-on	1 pc.

all product details on DIRAK.com
6-111.03

Dead Bolt Lock

[6-110]

RoHS WEEE

Advantages

- Double-rotating lockable application.
- RH / LH application.
- For Profile-cylinder DIN 18252.
- Countersunk machine screw for PHZ is included.

Materials

- **Dead bolt lock:** steel, zinc plated

Remarks

1. latch bolt

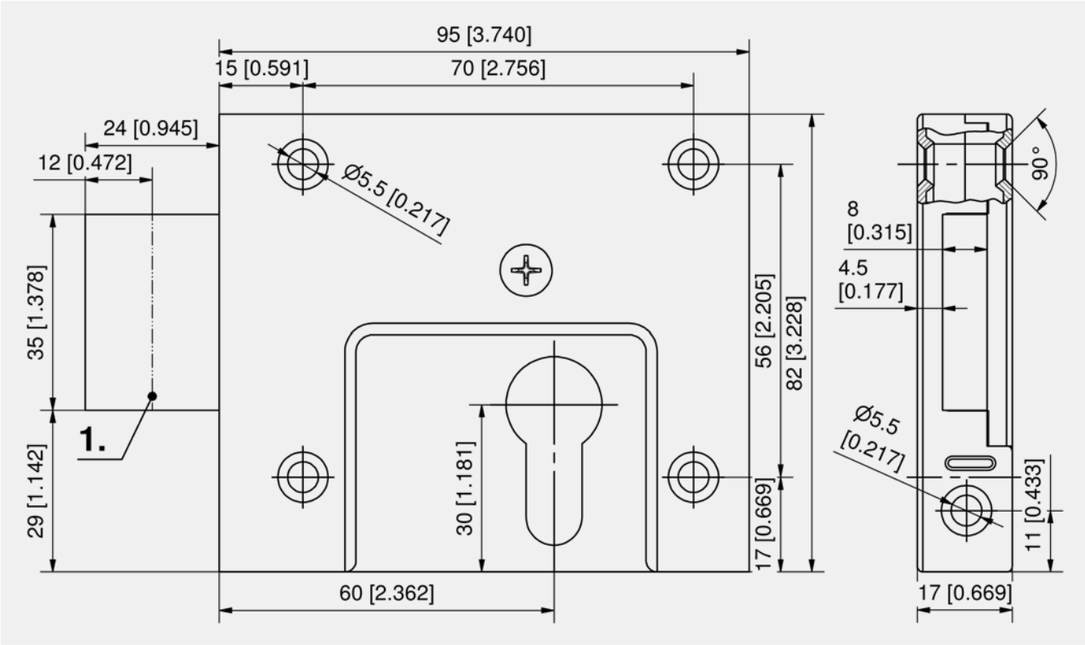

Dead bolt lock

Part Number	Version	Installation type	Delivery Unit
228-9001.00-00000	RH / LH	screw-on	1 pc.

Accessories
304, 388 2-140 **Profile-Cylinder DIN 18252**
860-0965.00-00570 **Countersunk machine screw for dead bolt lock**

6-110

all product details on DIRAK.com

2-Point Latch PHZ with Lock Cover

See page 440

Compression Latch PHZ

DIN 61373

IP 65

RoHS WEEE

Advantages

- Compression 10 - 20mm. (6.)
- No protruding handle or knob.
- The key inserted into the profile-cylinder opens and closes the lock according to DIN 18252.
- Closing- and opening operation 180°.
- The key is removable only in the locked position.
- IP65 according to DIN EN 60529. (2.)
- Vibration-proof according to DIN EN 61373.
- 1300N of force at the latching point.

Materials

- **Housing, housing cover, slider and cam:** zinc die, zinc plated
- **Roller:** POM, black
- **Washer, retaining clip and fastening screws:** steel, zinc plated
- **Shoulder bolt:** stainless steel
- **Gear cover:** PA6, black
- **O-Rings:** NBR, black
- **Flat external seal:** EPDM, black

Remarks

1. stroke 28,5mm

3. cam open position

4. to the pivot to the hinge min. 280mm

5. e.g. weld stud M6x20

Version DIN RH (as shown).
Version DIN LH on request.

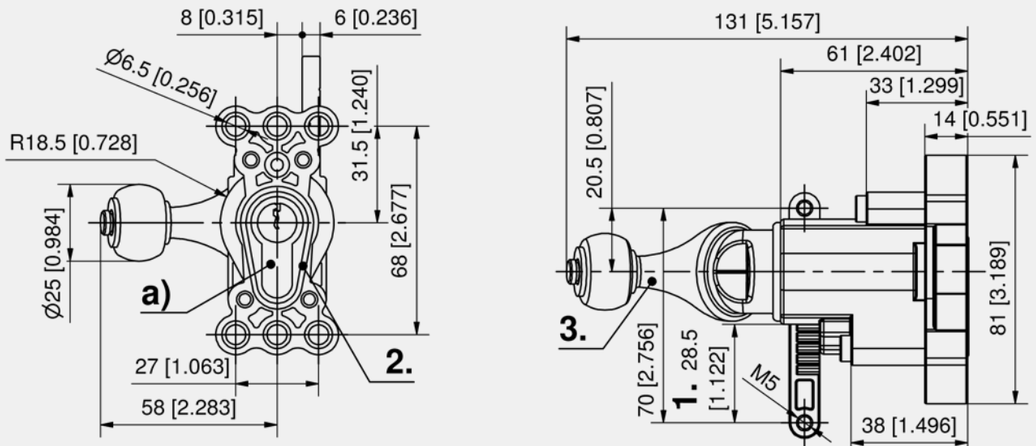

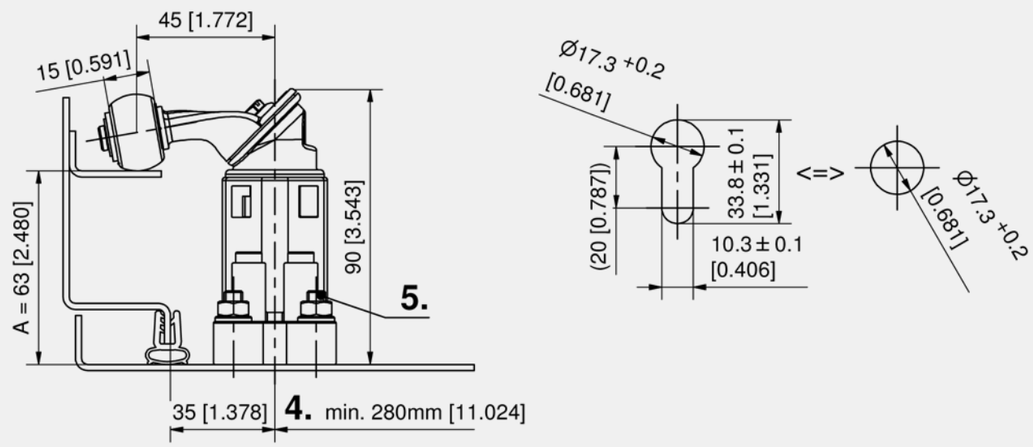

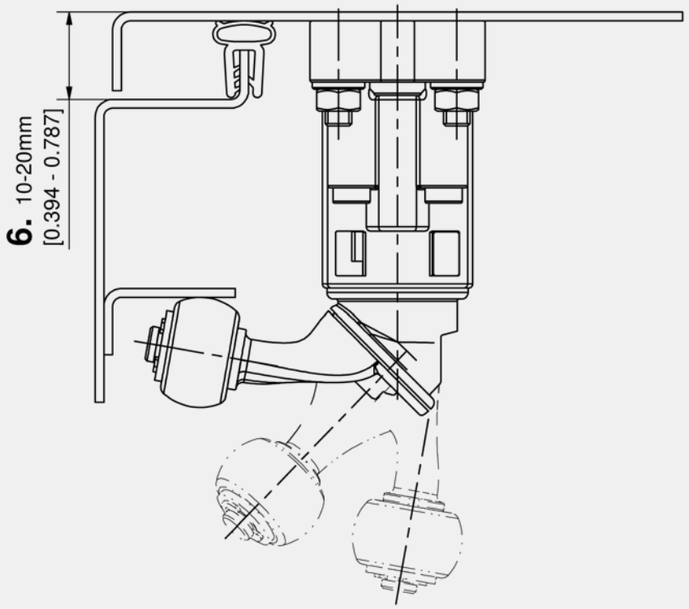

Compression latch PHZ (internal)

Part Number	1-point cam	A-dimension	Installation type	Delivery Unit
448-9112.00-00020	Yes	63 mm	screw-on	1 pc.

+	Accessories
a) 304, 388	211-9004.00-00000 **DIRAK Profile-cylinder**
a) 304, 388	211-9003.00-00000 **DIRAK Profile-cylinder**

6-500

◂ all product details on DIRAK.com

2-Point Latch PHZ, vertical

[6-501]

IP 65

RoHS WEEE

Advantages

- No protruding handle or knob.
- Perfectly suited to control flat rods.
- The key inserted into the profile-cylinder opens and closes the lock according to DIN 18252.
- Closing- and opening operation 180°.
- The key is removable only in the locked position.
- IP65 according to DIN EN 60529. (4.)

Materials

- **Housing, housing cover and slider:** zinc die, zinc plated
- **Screws:** steel, zinc plated
- **O-rings:** NBR, black
- **Flat external seal:** EPDM, black

Remarks

1. stroke 28.5mm
2. extracted
3. retracted
5. e.g. weld stud M6x20

Version DIN RH (as shown).
Version DIN LH on request.

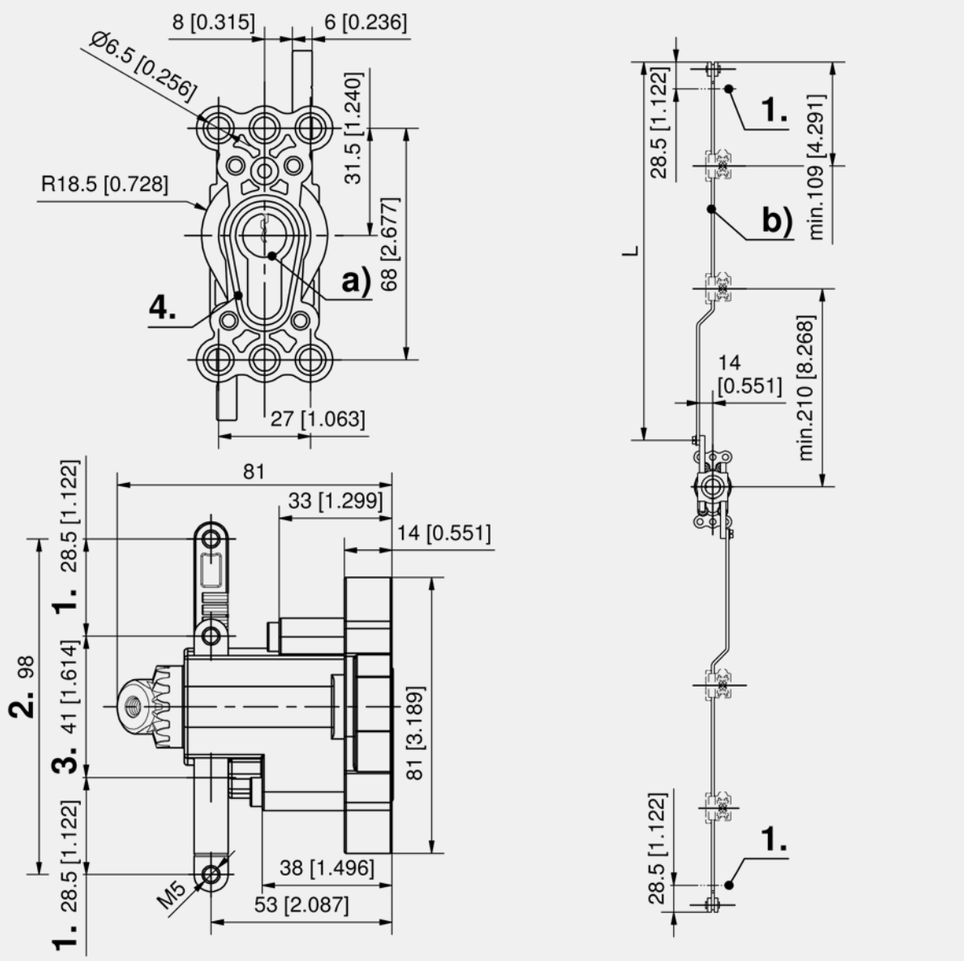

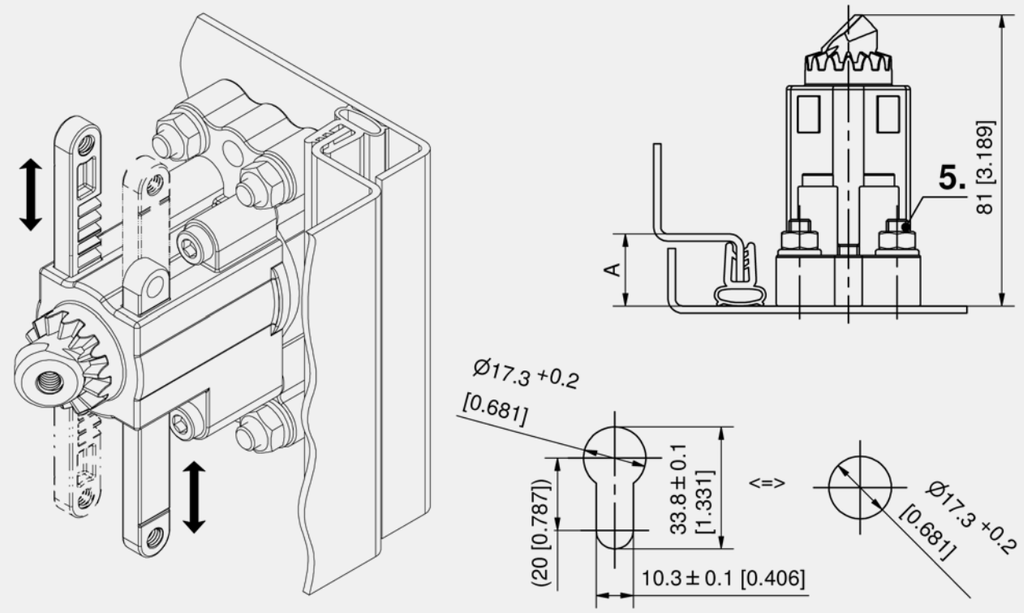

Rod formular:

$$L = \frac{\text{clearance of the cabinet} - 10\text{mm } [0.394] \text{ (tolerance)} - 41 \text{ (Rod Latch System in retraced condition)}}{2}$$

2-point latch PHZ (internal)

Part Number	Version	Multi-point latches	Installation type	Delivery Unit
448-9119.00-00000	for flat rods	Yes	screw-on	1 pc.

	378	3-910	**Rod Guide FS 23mm**
	379	3-911	**Rod Guide FS 23mm**
a)	304, 388	211-9003.00-00000	**DIRAK Profile-cylinder**
a)	304, 388	211-9004.00-00000	**DIRAK Profile-cylinder**

Accessories

b)	447	448-9303.00-Lxxmm	**Flat rod, special length**
b)	447	448-9304.00-Lxxmm	**Flat rod, special length**

Specific accessories

6-501

all product details on DIRAK.com

2-Point Latch PHZ, horizontal

[6-501.01]

IP 65

RoHS WEEE

Advantages

- No protruding handle or knob.
- Perfectly suited to control flat rods.
- The key inserted into the profile-cylinder opens and closes the lock according to DIN 18252.
- Closing- and opening operation 180°.
- The key is removable only in the locked position.
- IP65 according to DIN EN 60529. (4.)

Materials

- **Housing, housing cover and slider:** zinc die, zinc plated
- **Screws:** steel, zinc plated
- **O-rings:** NBR, black
- **Flat external seal:** EPDM, black

Remarks

Version DIN RH (as shown).
Version DIN LH on request.

1. stroke 28.5mm
2. extended
3. retracted
5. e.g. weld stud M6x20

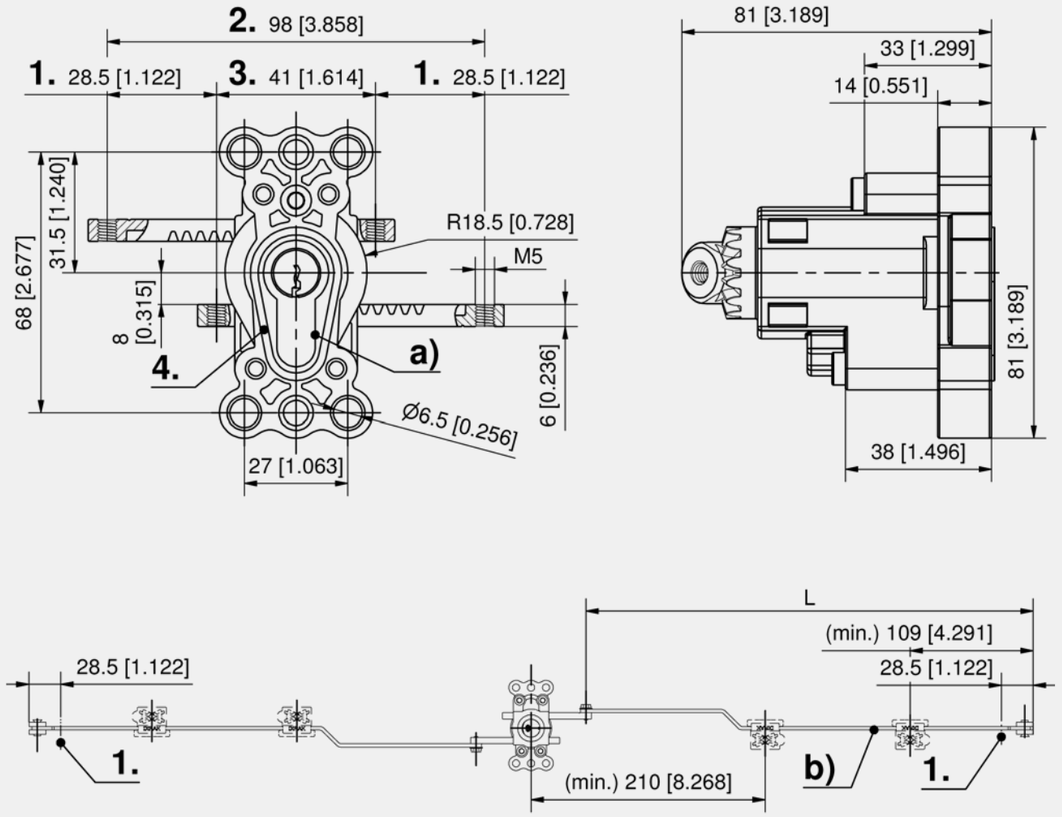

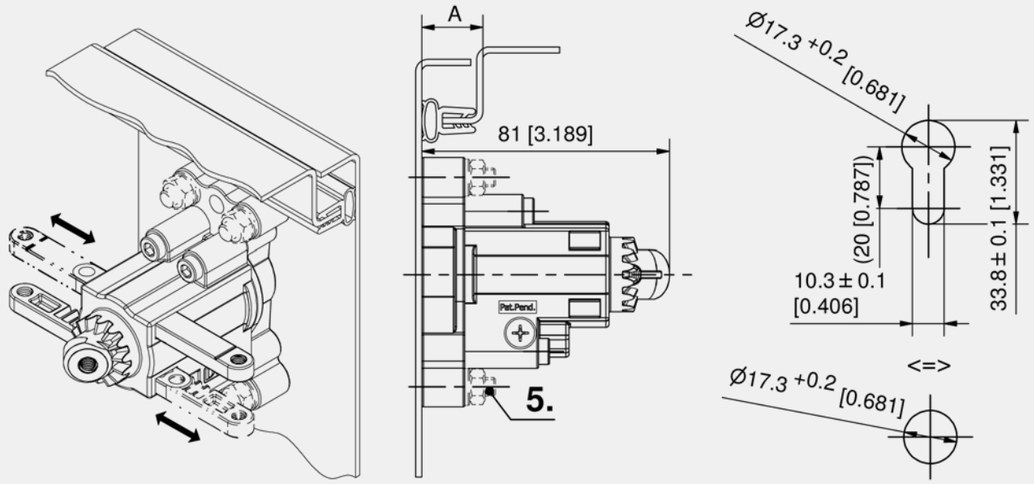

Rod formular:

$$L = \frac{\text{clearance of the cabinet} - 10\text{mm } [0.394] \text{ (tolerance)} - 41\ [1.614] \text{ (Rod Latch System in retraced condition)}}{2\ [0.079]}$$

2-point latch PHZ (internal)

Part Number	Version	Multi-point latches	Installation type	Delivery Unit
448-9125.00-00000	for flat rods	Yes	screw-on	1 pc.

	Accessories
a) 304, 388	211-9003.00-00000 **DIRAK Profile-cylinder**
a) 304, 388	211-9004.00-00000 **DIRAK Profile-cylinder**
378	3-910 **Rod Guide FS 23mm**
379	3-911 **Rod Guide FS 23mm**
b) 447	6-511 **Flat Rod for Multi-Point Locking**

Compression Latch PHZ with Lock Cover [6-502]

IP 65

RoHS WEEE

Advantages

- Ergonomically designed lock cover.
- Magnet supported cylinder flap. (5.)
- Compression 10 - 20mm. (2.)
- The key inserted into the profile-cylinder opens and closes the lock according to DIN 18252.
- Closing- and opening operation 180°.
- The key is removable only in the locked position.
- Grounding with set screw DIN 914 (incl.). (6.)
- Seismic-proof according to GR-63-CORE, Issue 4.
- IP65 according to DIN EN 60529. (3.)
- 1300N of force at the latching point.

Materials

- **Housing, slider and cam:** zinc die, zinc plated
- **Lock cover:** zinc die, matte chrome plated
- **Clamp:** zinc die, untreated
- **Seal:** CR / NBR
- **Roller:** POM, black
- **Washer, fastening screws and set screw:** steel, zinc plated
- **Collar screw:** stainless steel
- **Gear cover:** PA6, black

Remarks

(S) Door-thickness max. 3mm

1. stroke 28.5mm

4. opened

7. min 280mm to the pivot point (hinge)

Version DIN RH (as shown).
Version DIN LH on request.

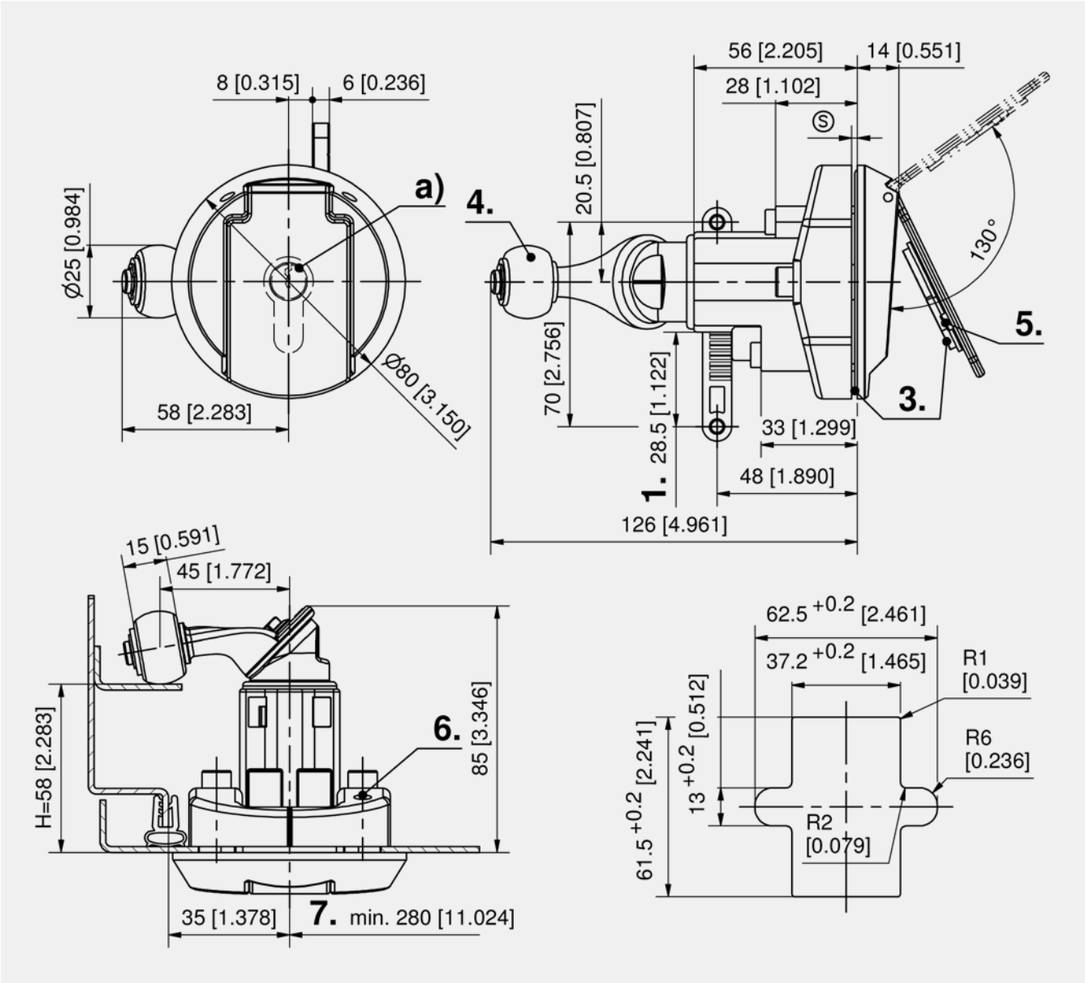

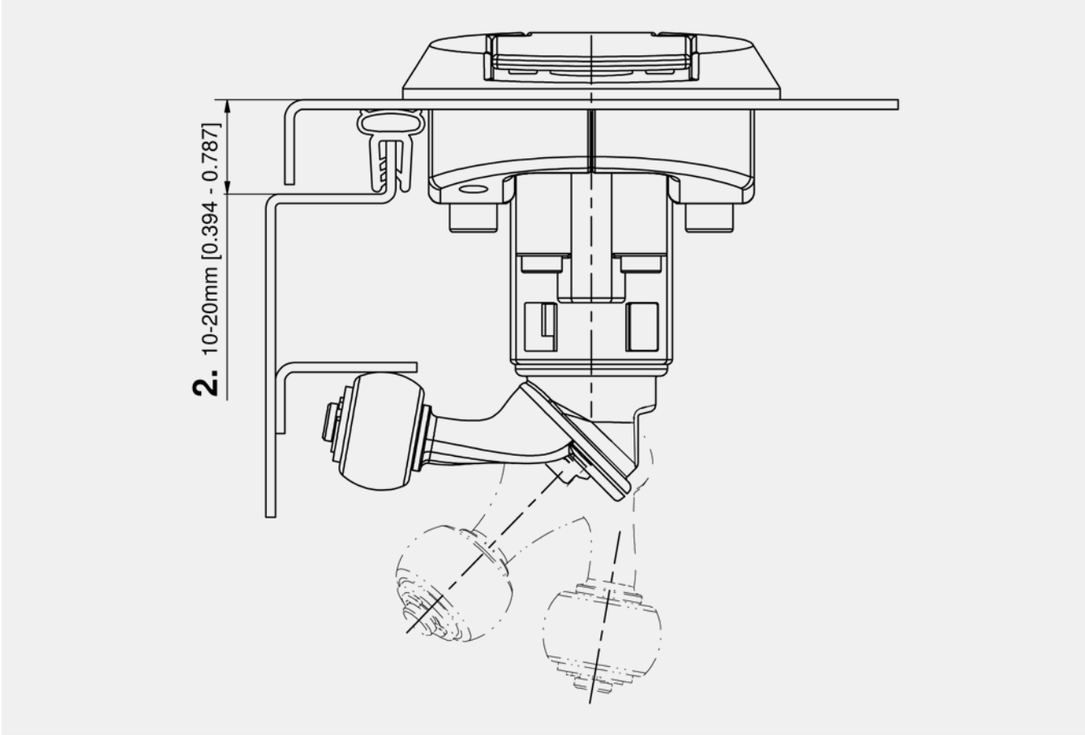

Compression latch with cover

Part Number	1-point cam	H-dimension	Installation type	Delivery Unit
448-9114.00-00020	Yes	58 mm	screw-on	1 pc.

+	Accessories
a) 304, 388	211-9004.00-00000 **DIRAK Profile-cylinder**
a) 304, 388	211-9003.00-00000 **DIRAK Profile-cylinder**

2-Point Latch PHZ with Lock Cover

[6-503]

DIN 61373

IP 69K

RoHS WEEE

Advantages

- Ergonomically designed vertical 2-point latch.
- Magnet supported cylinder flap. (5.)
- Perfectly suited to control flat rods.
- The key inserted into the profile-cylinder opens and closes the lock according to DIN 18252.
- Closing- and opening operation 180°.
- The key is removable only in the locked position.
- Grounding with set screw DIN 914 (incl.). (6.)
- Vibration-proof according to DIN EN 61373.
- IP69K according to DIN 40050. (4.)

Materials

- **Housing and slider:** zinc die, zinc plated
- **Clamp:** zinc die, untreated
- **Lock cover:** zinc die, matte chrome plated
- **Seal:** CR / NBR
- **Fastening screws and set screw:** steel, zinc plated

Remarks

(S) Door-thickness max. 3mm

1. stroke 28.5mm

2. extended

3. retracted

7. min. 280mm to pivot (hinge)

Version DIN RH (as shown).
Version DIN LH on request.

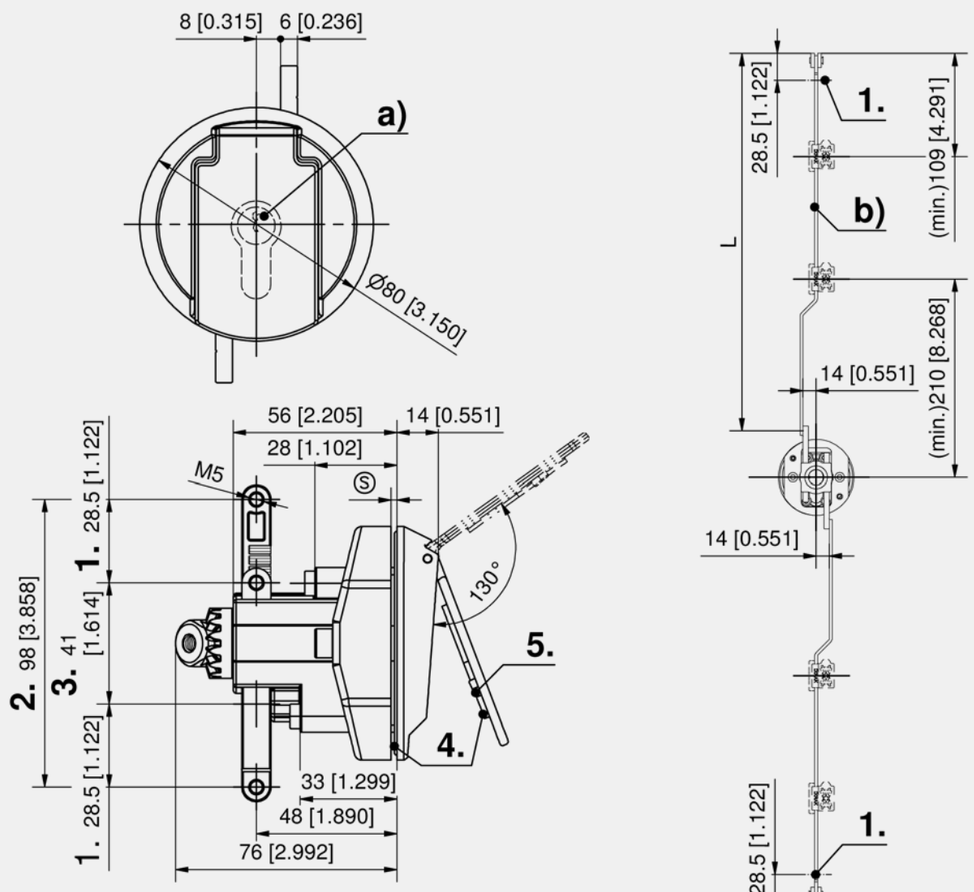

6-503

all product details on DIRAK.com

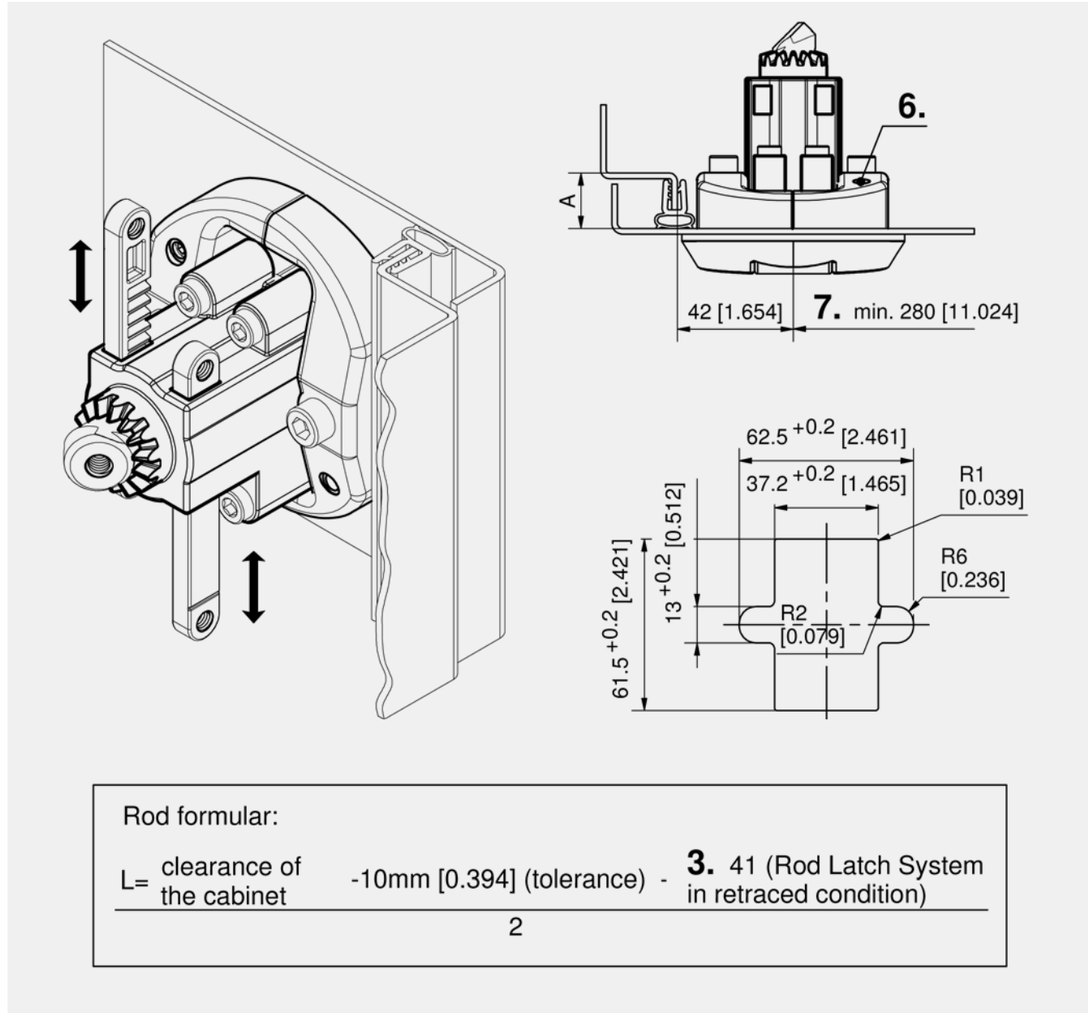

2-point latch with cover

Part Number	Version	Multi-point latches	Installation type	Delivery Unit
448-9120.00-00000	for flat rods	Yes	screw-on	1 pc.

	Accessories
a)	304, 388 211-9004.00-00000 **DIRAK Profile-cylinder**
a)	304, 388 211-9003.00-00000 **DIRAK Profile-cylinder**
b)	448-9305.00-Lxxmm
b)	448-9306.00-Lxxmm
	378 3-910 **Rod Guide FS 23mm**
	379 3-911 **Rod Guide FS 23mm**

2-Point Latch PHZ with Lock Cover

[6-503.01]

IP 65

RoHS WEEE

Advantages

- Ergonomically designed horzontal 2-point latch.
- Magnet supported cylinder flap. (5.)
- Perfectly suited to control flat rods.
- The key inserted into the profile-cylinder opens and closes the lock according to DIN 18252.
- Closing- and opening operation 180°.
- The key is removable only in the locked position.
- Grounding with set screw DIN 914 (incl.). (6.)
- IP65 according to DIN EN 60529.(4.)

Materials

- **Housing and slider:** zinc die, zinc plated
- **Clamp:** zinc die, untreated
- **Lock cover:** zinc die, matt chrome plated

Other surfaces on request!

- **O-rings:** NBR, black
- **Seal for cylinder flap:** CR
- **Fastening screws and set screw:** steel, zinc plated

Remarks

(S) Door-thickness max. 3mm

1. stroke 28.5mm

2. extended

3. retracted

Version DIN RH (as shown).
Version DIN LH on request.

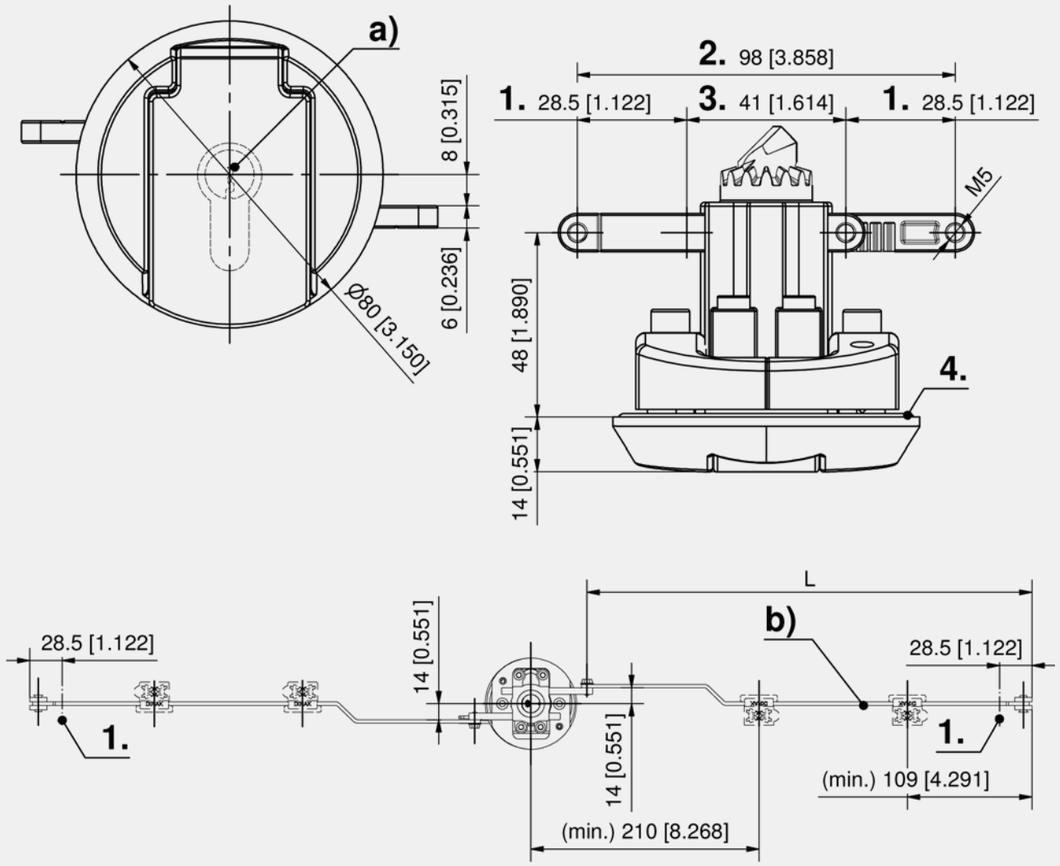

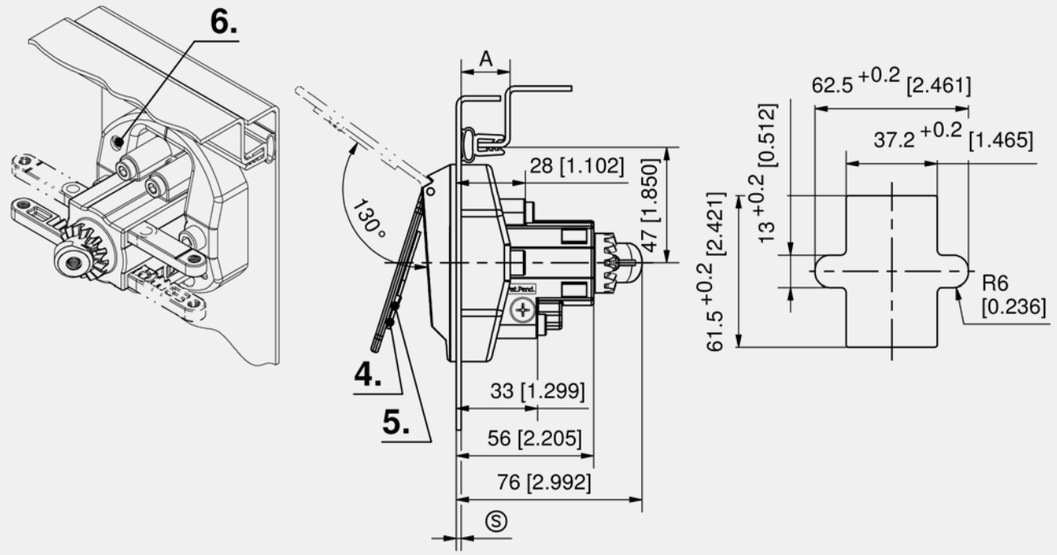

Rod formular:

$$L = \frac{\text{clearance of the cabinet} - 10\text{mm } [0.394] \text{ (tolerance)} - \text{3. } 41\ [1.614] \text{ (Rod Latch System in retraced condition)}}{2\ [0.079]}$$

2-point latch PHZ with lock cover

Part Number	Version	Multi-point latches	Installation type	Delivery Unit
448-9123.00-00000	for flat rods	Yes	screw-on	1 pc.

	Accessories
a) 304, 388	211-9003.00-00000 **DIRAK Profile-cylinder**
a) 304, 388	211-9004.00-00000 **DIRAK Profile-cylinder**
b)	448-9305.00-Lxxmm
b)	448-9306.00-Lxxmm
378	3-910 **Rod Guide FS 23mm**
379	3-911 **Rod Guide FS 23mm**

Compression Latch with Insert

[6-504]

DIN 61373

IP 65

RoHS WEEE

Advantages

- Flush latch.
- High transmission ratio with high contact pressure due to planetary gear.
- Compression 10 - 20mm. (6.)
- Single-point latch.
- Multi-point latch in combi-naton with locking element 6-510 and flat rods (h).
- Closing-and opening opera-tion 90°.
- 1300N of force per latching point.
- IP65 according to DIN EN 60529. (5)
- Vibration-proof according to DIN EN 61373.

Materials

- **Housing, slider and cam:** zinc die, zinc plated
- **O-rings:** NBR, black
- **Roller:** POM, black
- **Collar screw:** stainless steel
- **Insert:** zinc die, chrome plated
- **Gear cover:** PA6, black
- **Connecting rod:** steel, zinc plated

Remarks

1. stroke 28,5mm
2. clearance
3. closed
4. open
7. e.g. welding stud M6x25

Accessories connecting rod: price and delivery time on request

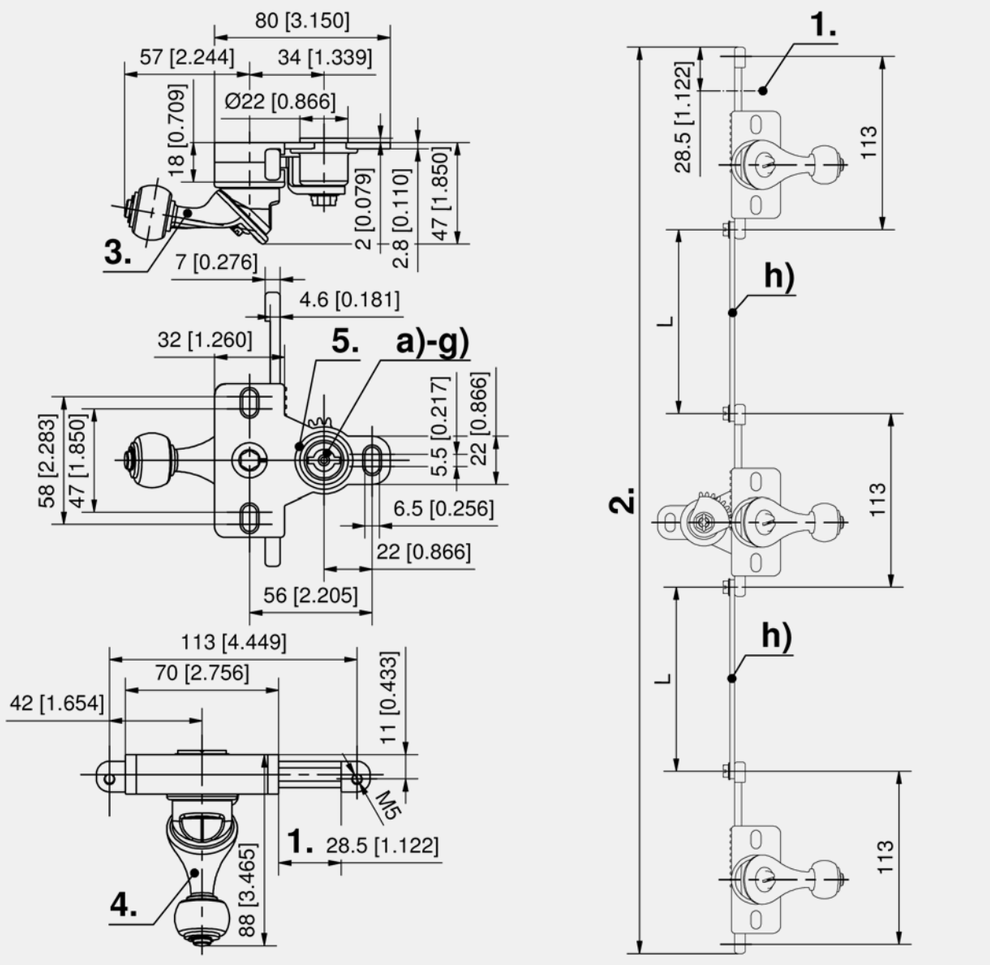

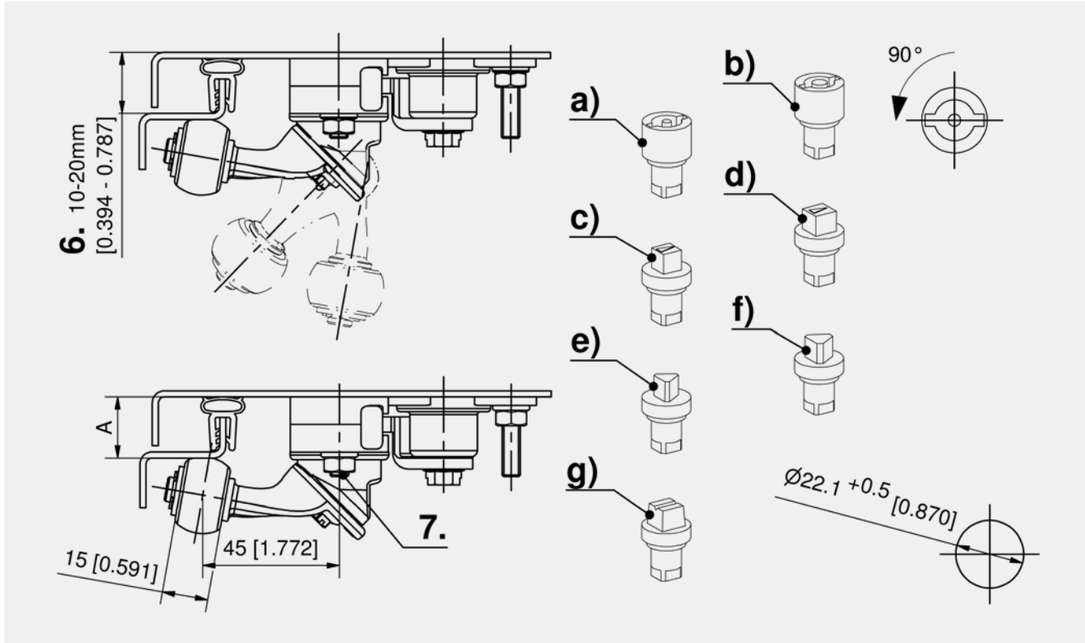

Compression latch

	Part Number	Insert	A	Installation type	Delivery Unit
a)	448-9117.00-01018	Double bit 3mm pin	18 mm	screw-on	1 pc.
b)	448-9117.00-02018	Double bit 5mm pin	18 mm	screw-on	1 pc.
c)	448-9117.00-03018	Square 7mm	18 mm	screw-on	1 pc.
d)	448-9117.00-04018	Square 8mm	18 mm	screw-on	1 pc.
e)	448-9117.00-05018	Triangular 7mm	18 mm	screw-on	1 pc.
f)	448-9117.00-06018	Triangular 8mm	18 mm	screw-on	1 pc.
g)	448-9117.00-07018	Conical square 9mm	18 mm	screw-on	1 pc.
a)	448-9117.00-01020	Double bit 3mm pin	20 mm	screw-on	1 pc.
b)	448-9117.00-02020	Double bit 5mm pin	20 mm	screw-on	1 pc.
c)	448-9117.00-03020	Square 7mm	20 mm	screw-on	1 pc.
d)	448-9117.00-04020	Square 8mm	20 mm	screw-on	1 pc.
e)	448-9117.00-05020	Triangular 7mm	20 mm	screw-on	1 pc.
f)	448-9117.00-06020	Triangular 8mm	20 mm	screw-on	1 pc.
g)	448-9117.00-07020	Conical square 9mm	20 mm	screw-on	1 pc.
a)	448-9117.00-01023	Double bit 3mm pin	23 mm	screw-on	1 pc.
b)	448-9117.00-02023	Double bit 5mm pin	23 mm	screw-on	1 pc.
c)	448-9117.00-03023	Square 7mm	23 mm	screw-on	1 pc.
d)	448-9117.00-04023	Square 8mm	23 mm	screw-on	1 pc.
e)	448-9117.00-05023	Triangular 7mm	23 mm	screw-on	1 pc.
f)	448-9117.00-06023	Triangular 8mm	23 mm	screw-on	1 pc.
g)	448-9117.00-07023	Conical square 9mm	23 mm	screw-on	1 pc.
a)	448-9117.00-01025	Double bit 3mm pin	25 mm	screw-on	1 pc.
b)	448-9117.00-02025	Double bit 5mm pin	25 mm	screw-on	1 pc.
c)	448-9117.00-03025	Square 7mm	25 mm	screw-on	1 pc.
d)	448-9117.00-04025	Square 8mm	25 mm	screw-on	1 pc.
e)	448-9117.00-05025	Triangular 7mm	25 mm	screw-on	1 pc.
f)	448-9117.00-06025	Triangular 8mm	25 mm	screw-on	1 pc.
g)	448-9117.00-07025	Conical square 9mm	25 mm	screw-on	1 pc.

Accessories

	Part Number	Name	Delivery Unit
h)	448-0802.15-Lxxmm	Connecting Rod	on request

	Accessories
768	6-100 **Wrench**
446	6-510 **Latching Device**

Latching Device

[6-510]

DIN 61373

RoHS WEEE

Advantages

- Latch element compatible with compression latch with insert 6-504.
- High transmission ratio with high contact pressure due to planetarygear.
- Compression 10 - 20mm.
- Multi-point latch by using flat rods.
- Closing-and opening operation 90°.
- 1300N of force per latching point.
- Vibration-proof according to DIN EN 61373.

Materials

- **Housing, slider and cam:** zinc die, zinc plated
- **Cover:** PA6, black
- **Roller:** POM, black

Remarks

1. stroke 28.5mm
2. closed
3. open
4. e.g. welding stud M6x25

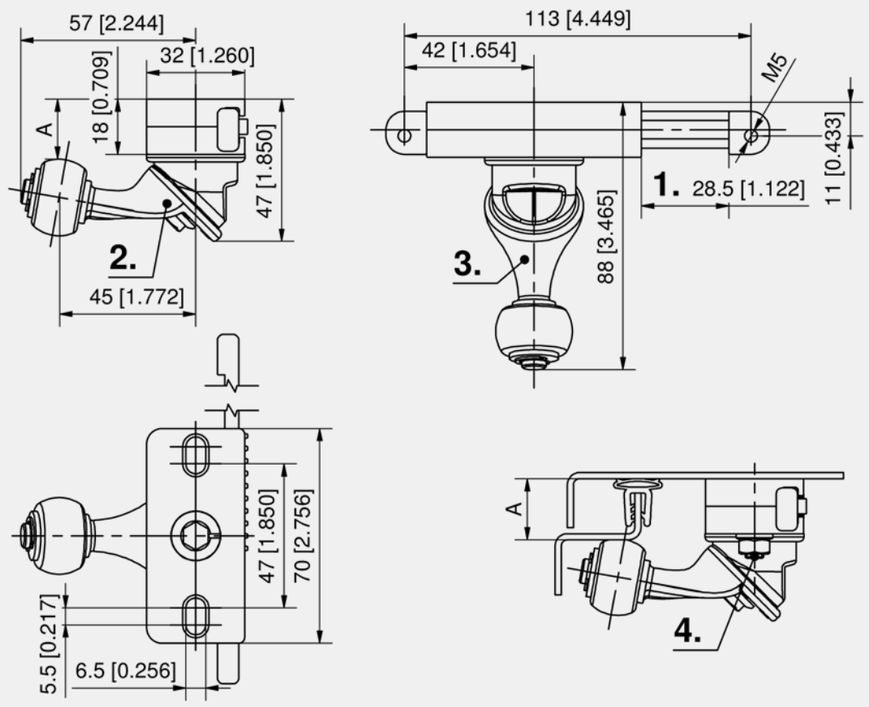

Latching device, internal

Part Number	A	Installation type	Delivery Unit
448-9106.00-00018	18 mm	screw-on	1 pc.
448-9106.00-00020	20 mm	screw-on	1 pc.
448-9106.00-00023	23 mm	screw-on	1 pc.
448-9106.00-00025	25 mm	screw-on	1 pc.

+	Accessories
444	6-504 **Compression Latch with Insert**

◂ all product details on DIRAK.com
6-510

Flat Rod for Multi-Point Locking

[6-511]

Advantages

- Use for 6-501, 6-501.01, 6-503 and 6-503.01.
- With rollers.
- Bending 20 / 26mm.
- Length variable.

Materials

- **Flat rod:** steel, zinc plated
- **Rollers:** PA, black

Remarks

DIRAK recommends 2 rod guides for rods with length greater than 200mm.

Price and delivery time on request.

1. length

RoHS WEEE

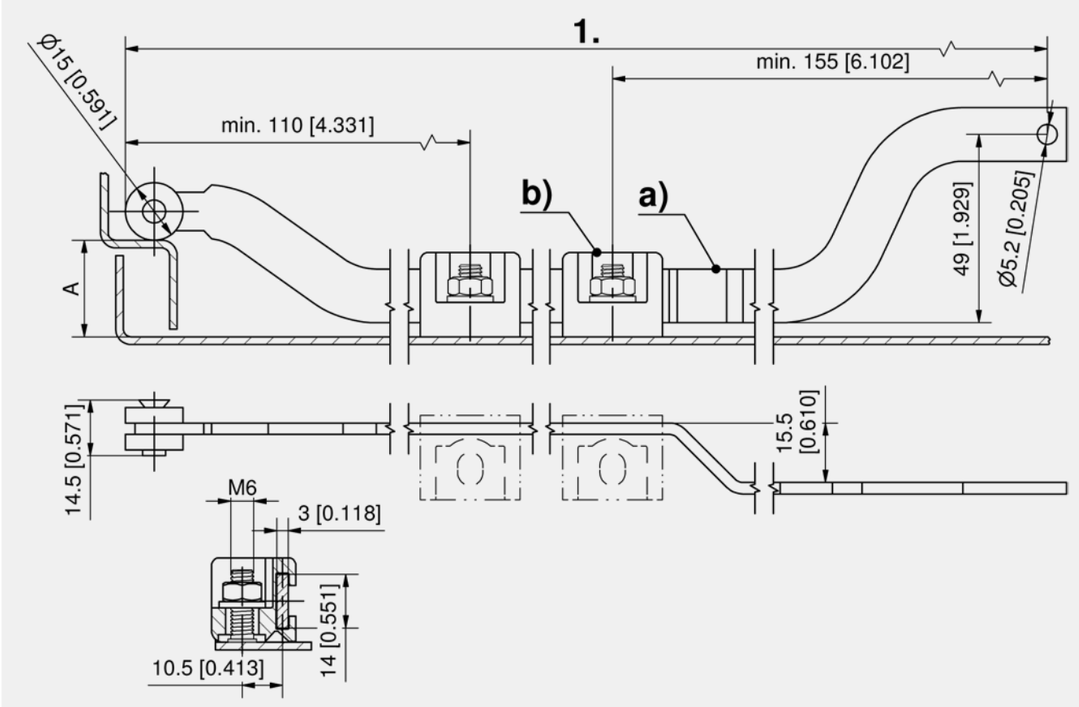

Flat rod with brass rollers, special length

	Part Number	Bending	Rod dimension WxH	Delivery Unit
a)	448-9303.00-Lxxmm	20 mm	14 x 3 mm	on request
a)	448-9304.00-Lxxmm	26 mm	14 x 3 mm	on request

+	Accessories
b) 378	3-910 **Rod Guide FS 23mm**
b) 379	3-911 **Rod Guide FS 23mm**

all product details ▸ on DIRAK.com
6-511

Compression Lever Latch

[6-160]

DIN 61373

RoHS WEEE

Advantages

- Flat compression lever latch with release button.
- With pre-assembled mounting bracket.
- No rear access needed for assembly.
- In closed position the lever latch cannot be disassembled.
- Vibration-proof according to DIN EN 61373.
- Adjustment of the H-dimension (1.) from 3 to 46mm.
- Lockable latches with stainless dust cap and 2 keys.
- Visibility of closing position by indicator at the insert variants (c.).

Materials

- **Compression lever latch:** zinc die, black, powder coated
- **Clamp:** steel, zinc plated
- **Insert:** zinc die, black, powder coated

Remarks

(S) Door-thickness max. 3.2mm

Installation:

2. the complete latch can be installed in the cutout from the front.

3. by turning the screw (PH2) from the outside, the mounting bracket spreads and fixes the latch in the door panel.

4. the latch is securely fastened by the mounting backet in the cutout.

5. by closing the latch the door is pulled against the frame.

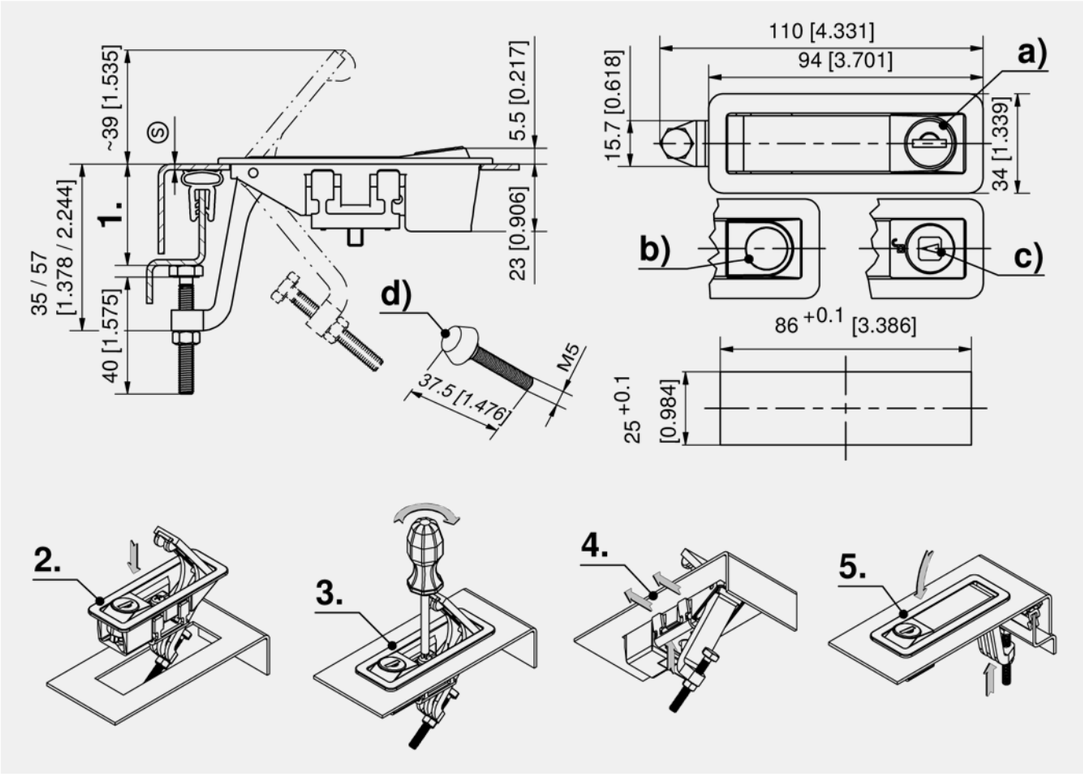

6-160

all product details on DIRAK.com

Compression lever latch, lockable

	Part Number	variable H-dimension	Length lever arm	Latching type	Installation type	Delivery Unit
a)	282-9417.00-00000	3 - 24 mm	35 mm	keyed alike DIRAK 1333	screw-on	1 pc.
a)	282-9418.00-00000	3 - 24 mm	35 mm	keyed different	screw-on	1 pc.
a)	282-9420.00-00000	22 - 46 mm	57 mm	keyed alike DIRAK 1333	screw-on	1 pc.
a)	282-9421.00-00000	22 - 46 mm	57 mm	keyed different	screw-on	1 pc.

Compression lever latch, without lock

	Part Number	variable H-dimension	Length lever arm	Installation type	Delivery Unit
b)	282-9416.00-00000	3 - 24 mm	35 mm	screw-on	1 pc.
b)	282-9419.00-00000	22 - 46 mm	57 mm	screw-on	1 pc.

Compression lever latch, with insert

	Part Number	variable H-dimension	Length lever arm	Insert	Installation type	Delivery Unit
c)	282-9428.00-00001	3 - 24 mm	35 mm	Square 6mm	screw-on	1 pc.
c)	282-9428.00-00002	3 - 24 mm	35 mm	Square 7mm	screw-on	1 pc.
c)	282-9428.00-00003	3 - 24 mm	35 mm	Square 8mm	screw-on	1 pc.
c)	282-9428.00-00004	3 - 24 mm	35 mm	Triangular 7mm	screw-on	1 pc.
c)	282-9428.00-00005	3 - 24 mm	35 mm	Triangular 8mm	screw-on	1 pc.
c)	282-9428.00-00006	3 - 24 mm	35 mm	Double bit 3mm pin	screw-on	1 pc.
c)	282-9428.00-00007	3 - 24 mm	35 mm	Double bit 5mm pin	screw-on	1 pc.
c)	282-9428.00-00008	3 - 24 mm	35 mm	Slotted 2x4mm	screw-on	1 pc.
c)	282-9429.00-00001	22 - 46 mm	57 mm	Square 6mm	screw-on	1 pc.
c)	282-9429.00-00002	22 - 46 mm	57 mm	Square 7mm	screw-on	1 pc.
c)	282-9429.00-00003	22 - 46 mm	57 mm	Square 8mm	screw-on	1 pc.
c)	282-9429.00-00004	22 - 46 mm	57 mm	Triangular 7mm	screw-on	1 pc.
c)	282-9429.00-00005	22 - 46 mm	57 mm	Triangular 8mm	screw-on	1 pc.
c)	282-9429.00-00006	22 - 46 mm	57 mm	Double bit 3mm pin	screw-on	1 pc.
c)	282-9429.00-00007	22 - 46 mm	57 mm	Double bit 5mm pin	screw-on	1 pc.
c)	282-9429.00-00008	22 - 46 mm	57 mm	Slotted 2x4mm	screw-on	1 pc.

+	Accessories
d)	202-1001.00-00000 **Screw with rubber bumper**

Compression Lever Latch

[6-160.01]

DIN 61373

RoHS WEEE

Advantages

- Flat compression lever latch with release button.
- With pre-assembled mounting bracket.
- No rear access needed for assembly.
- In closed position the lever latch cannot be disassembled.
- Vibration-proof according to DIN EN 61373.
- Adjustment of the H-dimension (1.) from 0 to 40mm.
- Lockable lever latches with stainless dust cover and 2 keys.
- The spring bolt keeps doors and flaps always under tension against the frame.
- No need for readjusting if the pressure if the sealing decreases.

Materials

- **Compression lever latch:** zinc die, black, powder coated
- **Clamp:** steel, zinc plated
- **Spring bolt and spring:** stainless steel

Remarks

(S) Door-thickness max. 3.2mm

Installation:

2. the complete latch can be installed in the cutout from the front.

3. by turning the screw (PH2) from the outside, the mounting bracket spreads and fixes the latch in the door panel.

4. the latch is securely fastened by the mounting backet in the cutout.

5. by closing the latch the door is pulled against the frame.

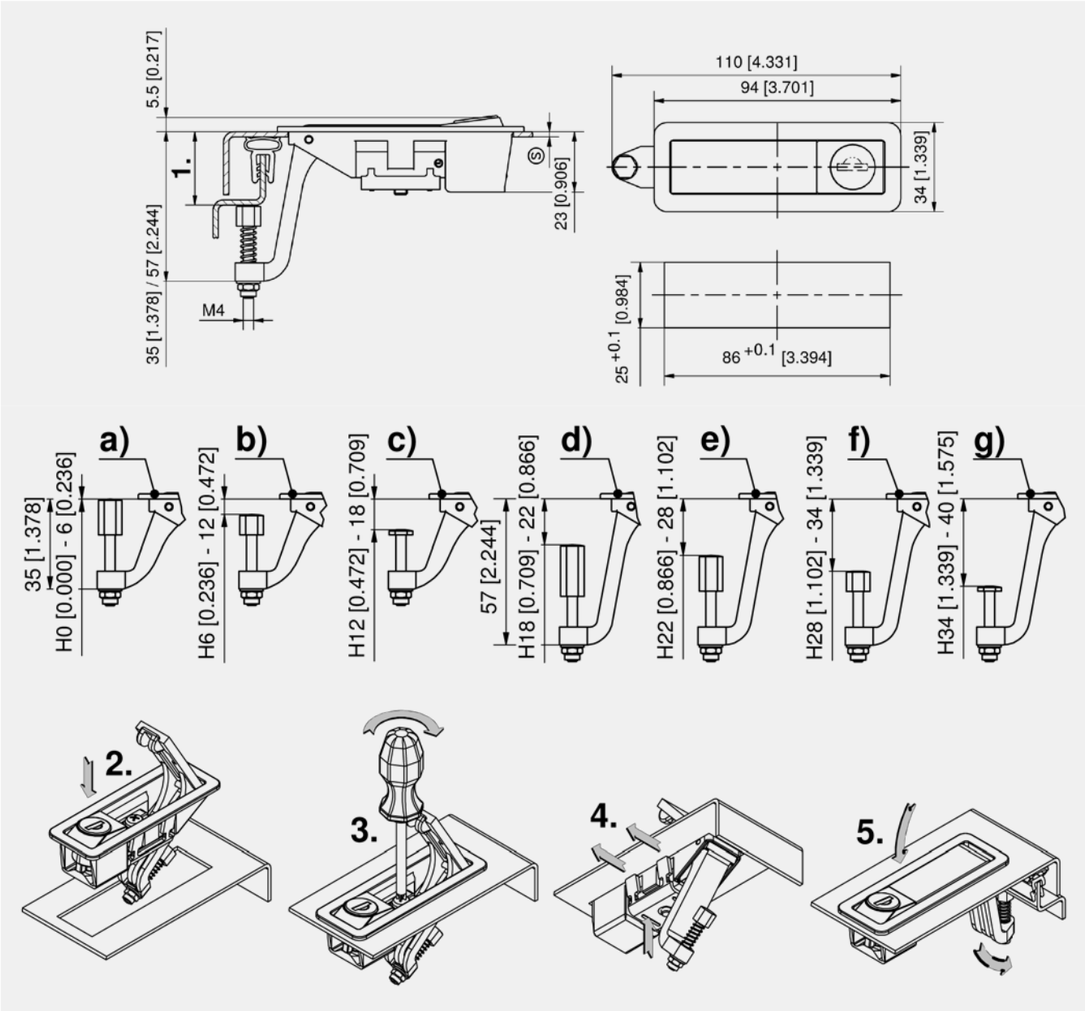

6-160.01

all product details on DIRAK.com

Compression lever latch, without lock

	Part Number	variable H-dimension	Installation type	Delivery Unit
a)	282-9413.00-00003	0 - 6 mm	screw-on	1 pc.
b)	282-9413.00-00009	6 - 12 mm	screw-on	1 pc.
c)	282-9413.00-00015	12 - 18 mm	screw-on	1 pc.
d)	282-9413.00-00020	18 - 22 mm	screw-on	1 pc.
e)	282-9413.00-00025	22 - 28 mm	screw-on	1 pc.
f)	282-9413.00-00031	28 - 34 mm	screw-on	1 pc.
g)	282-9413.00-00037	34 - 40 mm	screw-on	1 pc.

Compression lever latch, lockable

	Part Number	variable H-dimension	Latching type	Installation type	Delivery Unit
a)	282-9414.00-00003	0 - 6 mm	keyed alike DIRAK 1333	screw-on	1 pc.
a)	282-9415.00-00003	0 - 6 mm	keyed different	screw-on	1 pc.
b)	282-9414.00-00009	6 - 12 mm	keyed alike DIRAK 1333	screw-on	1 pc.
b)	282-9415.00-00009	6 - 12 mm	keyed different	screw-on	1 pc.
c)	282-9414.00-00015	12 - 18 mm	keyed alike DIRAK 1333	screw-on	1 pc.
c)	282-9415.00-00015	12 - 18 mm	keyed different	screw-on	1 pc.
d)	282-9414.00-00020	18 - 22 mm	keyed alike DIRAK 1333	screw-on	1 pc.
d)	282-9415.00-00020	18 - 22 mm	keyed different	screw-on	1 pc.
e)	282-9414.00-00025	22 - 28 mm	keyed alike DIRAK 1333	screw-on	1 pc.
e)	282-9415.00-00025	22 - 28 mm	keyed different	screw-on	1 pc.
f)	282-9414.00-00031	28 - 34 mm	keyed alike DIRAK 1333	screw-on	1 pc.
f)	282-9415.00-00031	28 - 34 mm	keyed different	screw-on	1 pc.
g)	282-9414.00-00037	34 - 40 mm	keyed alike DIRAK 1333	screw-on	1 pc.
g)	282-9415.00-00037	34 - 40 mm	keyed different	screw-on	1 pc.

Compression Lever Latch PA

[6-162]

RoHS WEEE

Advantages

- Flat compression lever latch with release button.
- Tool-less installation, clip-in.
- In closed position the lever latch cannot be disassembled.
- Adjustment of the H-dimension (1.) from 0 to 20mm.
- Lockable latches with stainless dust cover.
- Weight:
  without lock 40g,
  with lock 55g.

Materials

- **Compression lever latch:** PA, black
- **Screw and nut:** steel, zinc plated
- **Spring:** stainless steel

Remarks

2. insert the locking side in the open position

3. push the spring hook under the sheet metal

4. clip in

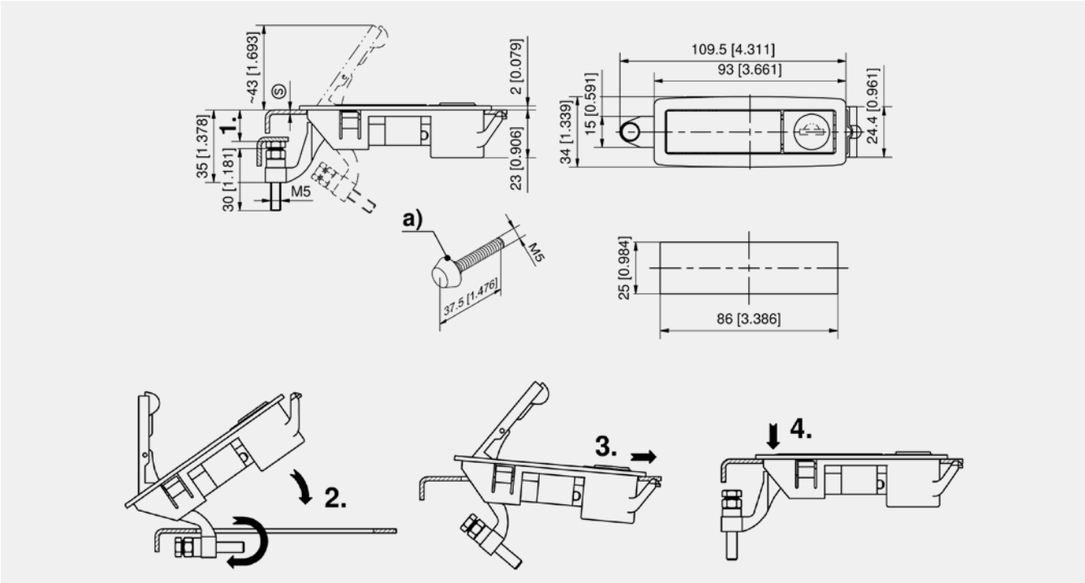

Compression lever latch, without lock

Part Number	Door-thickness (S)	Installation type	Delivery Unit
282-9408.00-00000	1.4 - 3.0 mm	tool-less	1 pc.
282-9410.00-00000	3.0 - 3.4 mm	tool-less	1 pc.

Compression lever latch, lockable

Part Number	Door-thickness (S)	Latching type	Installation type	Delivery Unit
282-9407.00-00000	1.4 - 3.0 mm	keyed alike DIRAK 1333	tool-less	1 pc.
282-9409.00-00000	1.4 - 3.0 mm	keyed different	tool-less	1 pc.
282-9411.00-00000	3.0 - 3.4 mm	keyed alike DIRAK 1333	tool-less	1 pc.
282-9412.00-00000	3.0 - 3.4 mm	keyed different	tool-less	1 pc.

+	Accessories
a)	202-1001.00-00000 **Screw with rubber bumper**

6-162

◂ all product details on DIRAK.com

Compression Lever Latch

[6-167]

Advantages

- Flat compression lever latch with handle plate and release button.
- Including pre-assembled mounting bracket.
- No rear access needed for assembly.
- No loose parts.
- In closed position the latch cannot be disassembled.
- Easy adjustment of the H-dimension from 31 to 43mm (1.)
- Seismic-proof according to GR-63-CORE, Issue 4.
- IP66 according to DIN EN 60529.
- Foamed sealing (captive).

Materials

- **Compression lever latch:** zinc die, black textured powder coated
- **Mounting bracket and screw:** steel, zinc plated

IP 66

RoHS WEEE

Remarks

(S) Door-thickness max. 3.2mm

1. H-dimension

Installation:

2. the complete latch can be installed in the cutout from the front.

3. by turning the screw (socket hex. SW3) from the outside, the mounting bracket spreads and fixes the latch in the door panel.

4. the latch is securely fastened by the mounting backet in the cutout.

5. by closing the lever the door is pulled against the frame.

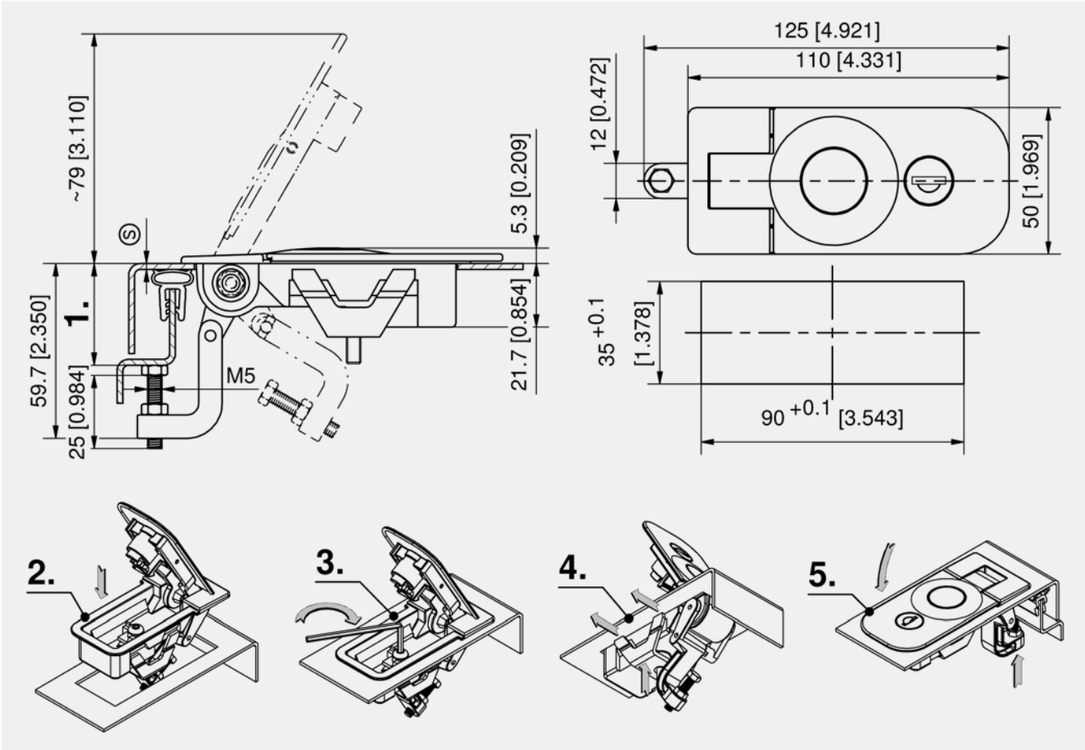

Compression lever latch, lockable

Part Number	Latching type	Installation type	Delivery Unit
353-2052.00-00001	keyed alike DIRAK 1333	screw-on	1 pc.

all product details ▸ on DIRAK.com

6-167

Compression Latch PA

[6-166]

RoHS
WEEE

Advantages

- Clip-in, lever actuation compression latch.
- Release = lift lever and turn.
- Close = turn and fold lever down.
- When closed, the cam is held in place using detents.
- **Clip-in version**
- (S) -dimension of 5 to 5.5mm.
- The latch comes pre-assembled and can be installed into the cutout.
- **Screw-on version**
- With the bridge and a M5 x 20 countersunk screw, a (S) -dimension of 0 to 3.5 mm can be achieved.

Materials

- **Compression latch:** PA, black
- **Spring:** spring steel
- **Pin, bridge and screw:** steel, zinc plated

Remarks

Stroke 24mm

1. compression 5mm
2. fastening bridge
3. installation situation with bridge
4. decompress
5. cam open / closed

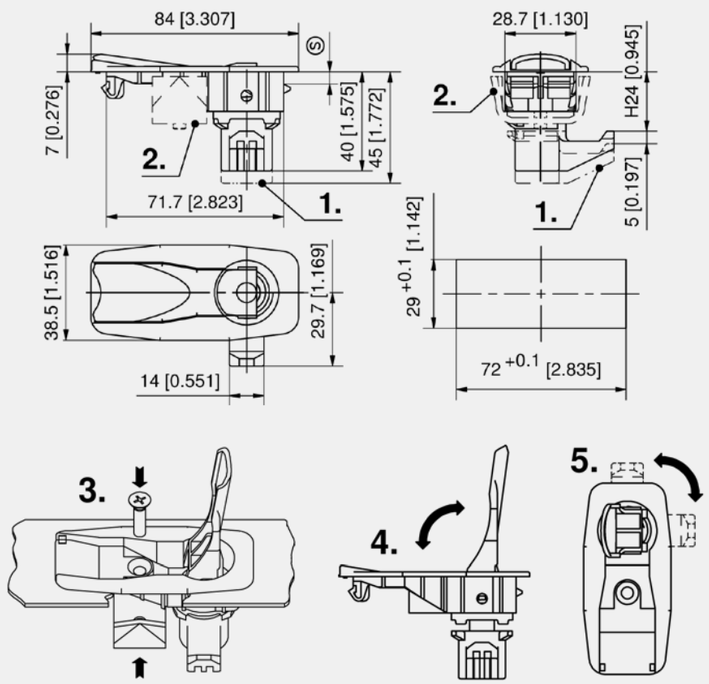

Compression latch, clip-in version

Part Number	Version	Installation type	Delivery Unit
282-9008.00-00000	LH door	tool-less	1 pc.
282-9009.00-00000	RH door	tool-less	1 pc.

Compression latch, screw-on version

Part Number	Version	Installation type	Delivery Unit
282-9010.00-00000	LH door	screw-on	1 pc.
282-9011.00-00000	RH door	screw-on	1 pc.

6-166

all product details on DIRAK.com

Slam Latch

See page 421

Compression Latch

[1-205]

R L

IP 65

RoHS WEEE

Advantages

- **Version a):** the H-dimension can be adjusted on the square threaded rod with the included nuts by +/- 20mm.
- Use of cams c).
- **Version b):** the H-dimension can be varied via the cranking of the cams.
- Use of cams d).
- The cams can be installed in four positions by rotating them 90°.
- IP65 according to DIN EN 60529 with flat seal (optional).

Materials

- **Compression latch:** zinc die, black or zinc plated
- **Square threaded rod, shaft and cams:** steel, zinc plated

Remarks

Installation with blind rivets or screws.

1. compression 7mm
2. open position
3. cam behind the locking surface
4. by folding of the handle the cam is tightened at the locking surface
5. lockable with padlock

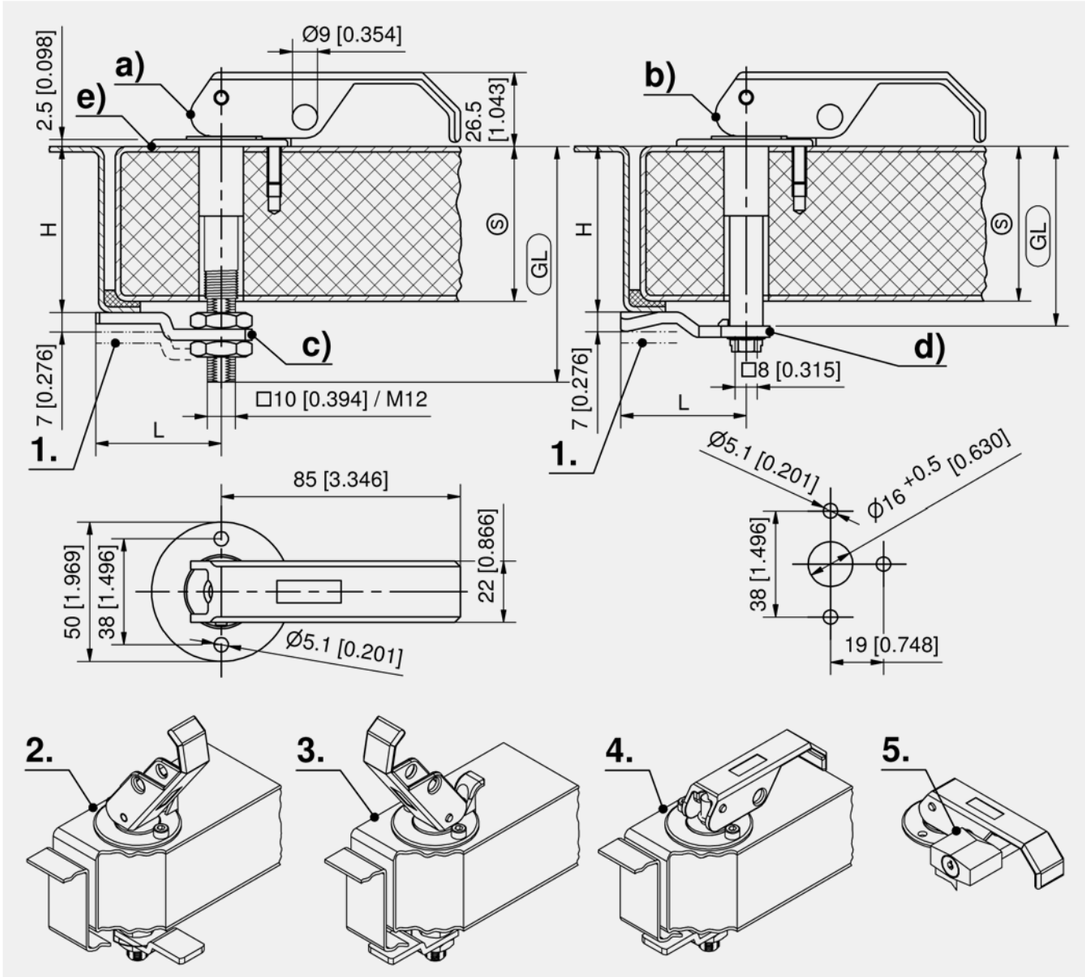

d) Cam (e.g. L=45mm/1.772inch)					
Frame size H at TS max.	42/1.654	62/2.441	82/3.228	102/4.016	Part No.
	32/1.260	52/2.047	72/2.835	92/3.622	200-0404
	34/1.339	54/2.126	74/2.913	94/3.701	200-0406
	36/1.417	56/2.205	76/2.992	96/3.780	200-0408
	38/1.496	58/2.283	78/3.071	98/3.858	200-0410
	41/1.614	61/2.402	81/3.189	101/3.976	200-0413
	42/1.654	62/2.441	82/3.228	102/4.016	200-0414
	44/1.732	64/2.520	84/3.307	104/4.094	200-0416
	46/1.811	66/2.598	86/3.386	106/4.173	200-0418
	48/1.890	68/2.677	88/3.465	108/4.252	200-0420
	50/1.969	70/2.756	90/3.543	110/4.331	200-0422
	52/2.047	72/2.835	92/3.622	112/4.409	200-0424
	54/2.216	74/2.913	94/3.701	114/4.488	200-0426

Compression latch, zinc die, black, version a)

	Part Number	Door-thickness (S)	variable H-dimension	Installation type	Delivery Unit
a)	200-9935.00-00000	max. 50 mm	30 - 60 mm	screw-on	10 pcs.
a)	200-9936.00-00000	max. 70 mm	50 - 80 mm	screw-on	10 pcs.
a)	200-9937.00-00000	max. 90 mm	70 - 100 mm	screw-on	10 pcs.
a)	200-9938.00-00000	max. 110 mm	90 - 120 mm	screw-on	10 pcs.

Compression latch, zinc die, zinc plated, version a)

	Part Number	Door-thickness (S)	variable H-dimension	Installation type	Delivery Unit
a)	200-9939.00-00000	max. 50 mm	30 - 60 mm	screw-on	10 pcs.
a)	200-9940.00-00000	max. 70 mm	50 - 80 mm	screw-on	10 pcs.
a)	200-9941.00-00000	max. 90 mm	70 - 100 mm	screw-on	10 pcs.
a)	200-9942.00-00000	max. 110 mm	90 - 120 mm	screw-on	10 pcs.

Compression latch, zinc die, black, version b)

	Part Number	Door-thickness (S)	variable H-dimension	Installation type	Delivery Unit
b)	200-9916.00-00000	max. 42 mm	32 - 54 mm	screw-on	10 pcs.
b)	200-9918.00-00000	max. 62 mm	52 - 74 mm	screw-on	10 pcs.
b)	200-9920.00-00000	max. 82 mm	72 - 94 mm	screw-on	10 pcs.
b)	200-9922.00-00000	max. 102 mm	92 - 114 mm	screw-on	10 pcs.

Compression latch, zinc die, zinc plated, version b)

	Part Number	Door-thickness (S)	variable H-dimension	Installation type	Delivery Unit
b)	200-9926.00-00000	max. 42 mm	32 - 54 mm	screw-on	10 pcs.
b)	200-9928.00-00000	max. 62 mm	52 - 74 mm	screw-on	10 pcs.
b)	200-9930.00-00000	max. 82 mm	72 - 94 mm	screw-on	10 pcs.
b)	200-9932.00-00000	max. 102 mm	92 - 114 mm	screw-on	10 pcs.

Cam, straight

	Part Number	Length	Delivery Unit
c)	200-5508.00-00045	45 mm	10 pcs.
c)	200-5508.00-00060	60 mm	10 pcs.
c)	200-5508.00-00065	65 mm	10 pcs.

Cam, cranked

	Part Number	Length	Delivery Unit
c)	200-5507.00-00045	45 mm	10 pcs.
c)	200-5507.00-00060	60 mm	10 pcs.

+	Accessories
	d) 154, 292 1-102 **Cams L35/45 Steel**
	d) 161 1-262 **Cams variable**
	e) 200-0902.00-00000 **Flat external seal Ø17mm / 22mm**

1-205

all product details on DIRAK.com

Heavy Duty Latch System for HVAC Applications [6-280]

R L

IP 69K

RoHS WEEE

Advantages

- Handle outside.
- Without lock, with cylinder barrel or insert.
- Suitable for different door-thicknesses.
- Lockable handles, keyed alike, are equipped with stainless steel dust-shutter.
- IP69K according to DIN 40050 by sealing kit.

Materials

a), a2) and a3)

- **Handle:** PA, black

a1)

- **Handle:** PA, black / steel, zinc plated

a3)

- **Insert:** zinc die, chrome plated

Remarks

(S) Door-thickness see product system 6-280.02

Cutout see product system 6-280.05.

Sealing kits see product system 6-280.05.

Fastening with cylinder head screws M8.

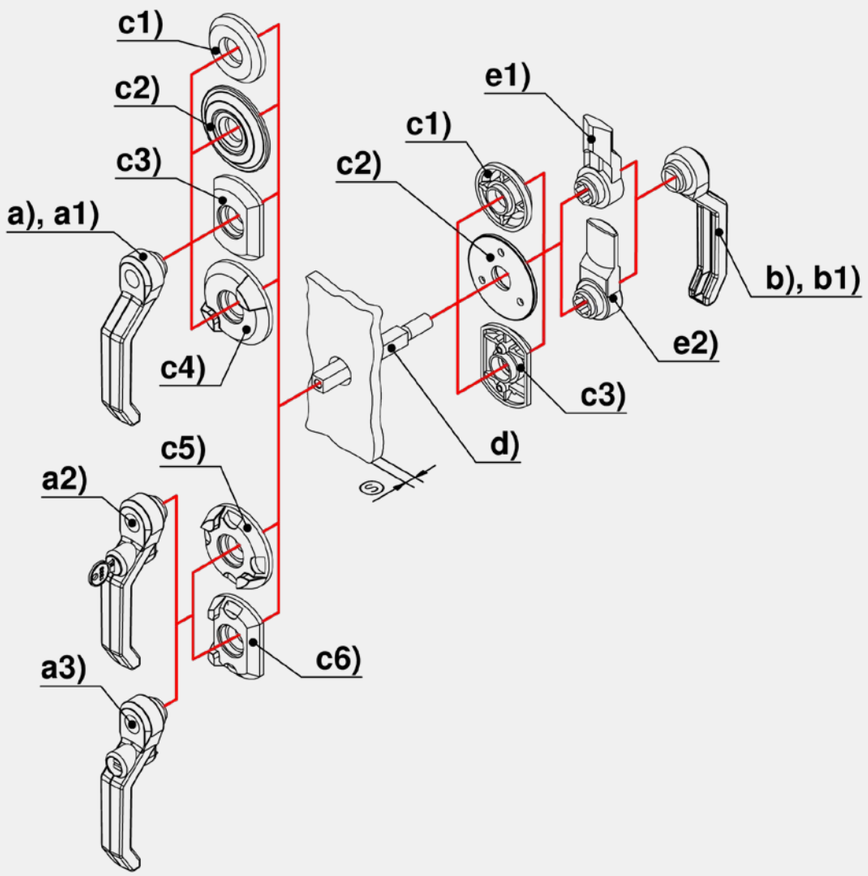

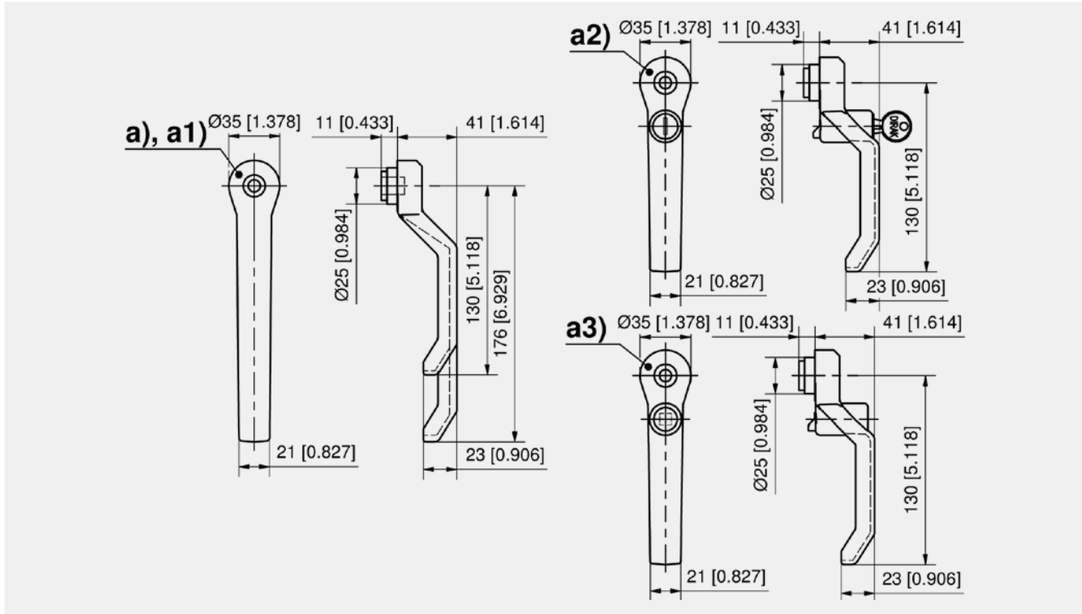

Handle outside, without lock

	Part Number	Handle length	Version	Delivery Unit
a)	232-0201.00-00000	130 mm		1 pc.
a)	232-0202.00-00000	176 mm		1 pc.
a1)	232-0207.00-00000	130 mm	with steel core	1 pc.
a1)	232-0208.00-00000	176 mm	with steel core	1 pc.

Handle outside, with cylinder

	Part Number	Handle length	Latching type	Delivery Unit
a2)	232-9303.00-00000	130 mm	keyed alike DIRAK 1333	1 pc.
a2)	532-9303.00-00000	130 mm	keyed alike DS200	1 pc.
a2)	232-9304.00-00000	130 mm	keyed different	1 pc.

Handle outside, with insert

	Part Number	Handle length	Insert	Delivery Unit
a3)	232-9401.00-00000	130 mm	Square 6mm	1 pc.
a3)	232-9402.00-00000	130 mm	Square 7mm	1 pc.
a3)	232-9403.00-00000	130 mm	Square 8mm	1 pc.
a3)	232-9404.00-00000	130 mm	Square 8mm, slotted	1 pc.
a3)	232-9405.00-00000	130 mm	Triangular 6.5mm CNOMO	1 pc.
a3)	232-9406.00-00000	130 mm	Triangular 7mm	1 pc.
a3)	232-9407.00-00000	130 mm	Triangular 8mm	1 pc.
a3)	232-9408.00-00000	130 mm	Triangular 6.5mm CNOMO	1 pc.
a3)	232-9409.00-00000	130 mm	Double bit 3mm pin	1 pc.
a3)	232-9410.00-00000	130 mm	Double bit 5mm pin	1 pc.
a3)	232-9411.00-00000	130 mm	Socket hex. 6mm	1 pc.
a3)	232-9412.00-00000	130 mm	Socket hex. 10mm	1 pc.
a3)	232-9413.00-00000	130 mm	Square socket 6mm	1 pc.
a3)	232-9414.00-00000	130 mm	Square socket 7mm	1 pc.
a3)	232-9415.00-00000	130 mm	Square socket 8mm	1 pc.
a3)	232-9416.00-00000	130 mm	Daimler Benz type	1 pc.
a3)	232-9417.00-00000	130 mm	Slotted 2x4mm	1 pc.
a3)	232-9418.00-00000	130 mm	Crown type key	1 pc.
a3)	232-9419.00-00000	130 mm	Slotted insert	1 pc.
a3)	232-9420.00-00000	130 mm	Half-round czech	1 pc.

+		Specific accessories
b)-b1)	460	6-280.01 **Handle Inside, for Heavy Duty Latch System**
c1)-c6)	464	6-280.05 **Bezels for Heavy Duty Latches**
d)	461	6-280.02 **Shafts for Heavy Duty Latches**
e1)-e2)	462	6-280.03 **Cams for Heavy Duty Latches**
f1)-f3)	463	6-280.04 **Compression Cam for Heavy Duty Latches**

Handle Inside, for Heavy Duty Latch System [6-280.01]

R L

RoHS WEEE

Advantages

- Handle for opening from inside.

Materials

b)

- **Handle :** PA, black

b1)

- **Handle:** PA, black / steel, zinc plated

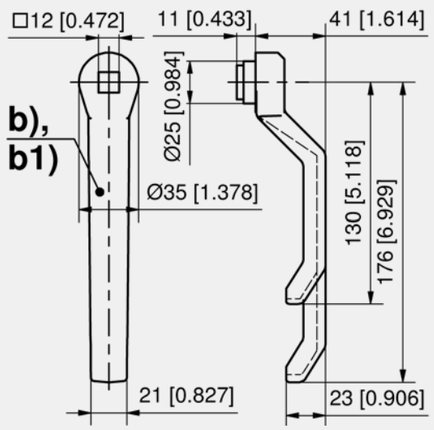

Handle inside

	Part Number	Handle length	Material	Installation type	Delivery Unit
b)	232-0301.00-00000	130 mm	PA	attachable on shaft 12x12	1 pc.
b)	232-0302.00-00000	176 mm	PA	attachable on shaft 12x12	1 pc.
b1)	232-0303.00-00000	130 mm	PA with steel core	attachable on shaft 12x12	1 pc.
b1)	232-0304.00-00000	176 mm	PA with steel core	attachable on shaft 12x12	1 pc.

	Specific accessories
458	6-280 **Heavy Duty Latch System for HVAC Applications**
461	6-280.02 **Shafts for Heavy Duty Latches**
462	6-280.03 **Cams for Heavy Duty Latches**
463	6-280.04 **Compression Cam for Heavy Duty Latches**
464	6-280.05 **Bezels for Heavy Duty Latches**

6-280.01

◂ all product details on DIRAK.com

Shafts for Heavy Duty Latches [6-280.02]

RoHS WEEE

Advantages

- Shaft 12 x 12 consisting off:
- 1. cover
- 2. fastening screw at the front M8 .
- 3. washer and fastening nut inside M12.

Materials

- **1.:** PA, black
- **2., 3., 4. and shaft:** steel, zinc plated

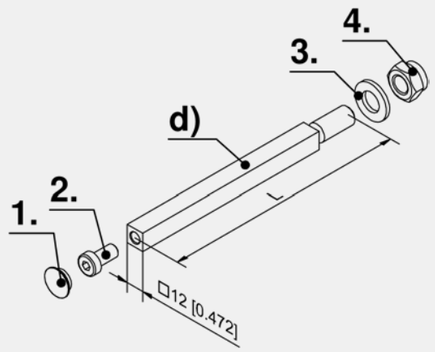

Shafts

	Part Number	Length	Heavy duty latch (without inside handle) door thickness (S)	Heavy duty latch with cam and inside handle door thickness (S)	Heavy duty latch with compression cam (without inside handle, with distance bushing) door thickness (S)	Heavy duty latch with compression cam and inside handle door thickness (S)	Delivery Unit
d)	232-9101.00-00000	82 mm	20 + / - 10				5 pcs.
d)	232-9102.00-00000	92 mm	30 + / - 10				5 pcs.
d)	232-9103.00-00000	102 mm	40 + / - 10	20 + / - 5	20 + / - 5	20 + / - 5	5 pcs.
d)	232-9104.00-00000	112 mm	50 + / - 10	30 + / - 5	30 + / - 5	30 + / - 5	5 pcs.
d)	232-9105.00-00000	122 mm	60 + / - 10	40 + / - 5	40 + / - 5	40 + / - 5	5 pcs.
d)	232-9106.00-00000	132 mm	70 + / - 10	50 + / - 5	50 + / - 5	50 + / - 5	5 pcs.
d)	232-9107.00-00000	142 mm	80 + / - 10	60 + / - 5	60 + / - 5	60 + / - 5	5 pcs.
d)	232-9109.00-00000	162 mm	100 + / - 10	80 + / - 5	80 + / - 5	80 + / - 5	5 pcs.
d)	232-9111.00-00000	182 mm	120 + / - 10	100 + / - 5	100 + / - 5	100 + / - 5	5 pcs.

	Specific accessories
464	6-280.05 **Bezels for Heavy Duty Latches**
460	6-280.01 **Handle Inside, for Heavy Duty Latch System**
458	6-280 **Heavy Duty Latch System for HVAC Applications**
462	6-280.03 **Cams for Heavy Duty Latches**
463	6-280.04 **Compression Cam for Heavy Duty Latches**

all product details ▸ on DIRAK.com

6-280.02

Cams for Heavy Duty Latches

[6-280.03]

RoHS WEEE

Advantages

- 8 x 45° adjustable.

Materials

- **Cams:** zinc die, zinc plated

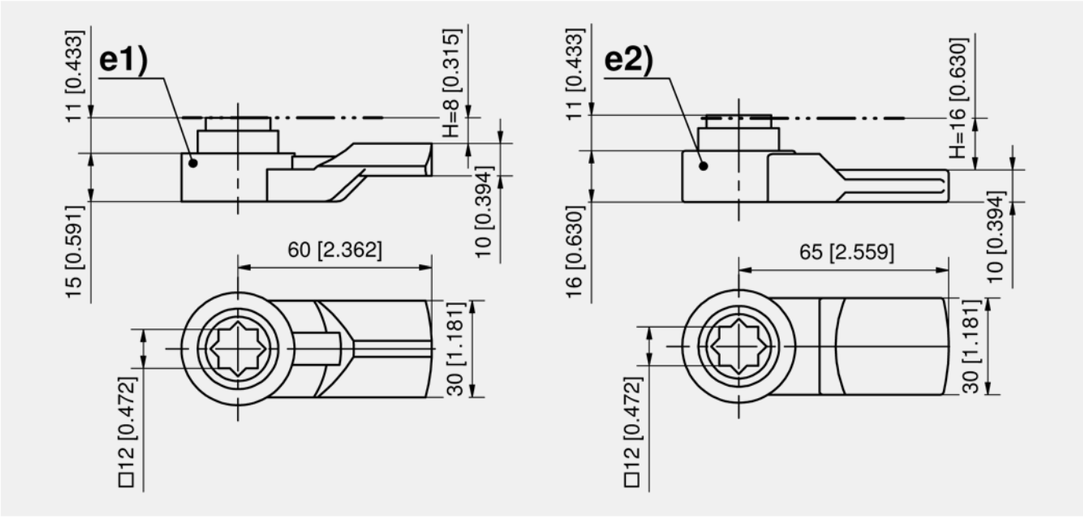

Cams

	Part Number	Height H	Length	Delivery Unit
e1)	232-0501.00-00000	8 mm	60 mm	1 pc.
e2)	232-0502.00-00000	16 mm	65 mm	1 pc.

	Specific accessories
464	6-280.05 **Bezels for Heavy Duty Latches**
460	6-280.01 **Handle Inside, for Heavy Duty Latch System**
458	6-280 **Heavy Duty Latch System for HVAC Applications**
461	6-280.02 **Shafts for Heavy Duty Latches**

6-280.03

◂ all product details on DIRAK.com

Compression Cam for Heavy Duty Latches

[6-280.04]

RoHS WEEE

Advantages

- Compression 6mm.

Materials

- **Compression cam:** aluminum, untreated
- **Locking bolt and spacer:** steel, zinc plated

Remarks

(S) see product system 6-280.02.

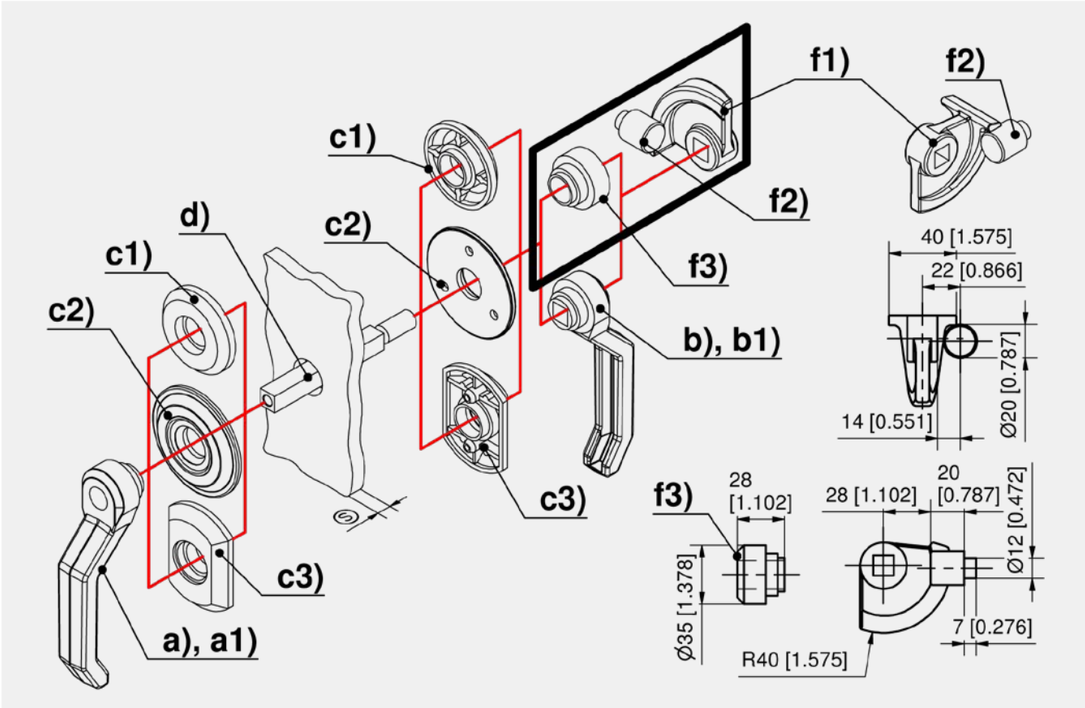

Compression cam and accessories

	Part Number	Name	Version	Delivery Unit
f1)	232-0601.00-00000	Compression cam		1 pc.
f2)	232-0801.00-00000	Locking bolt	suitable for compression cam	1 pc.
f3)	232-0701.00-00000	Distance bushing	when used without inside handle	1 pc.

		Specific accessories
c1)-c6)	464	6-280.05 **Bezels for Heavy Duty Latches**
b)-b1)	460	6-280.01 **Handle Inside, for Heavy Duty Latch System**
a)-a3)	458	6-280 **Heavy Duty Latch System for HVAC Applications**
d)	461	6-280.02 **Shafts for Heavy Duty Latches**

all product details ▸ on DIRAK.com

6-280.04

Bezels for Heavy Duty Latches

[6-280.05]

IP 65

RoHS WEEE

Advantages

- Bezels round and oblong.
- With and without stop.
- With or without latch recesses.

Materials

- **Bezels:** PA, black or steel, zinc plated
- **Sealing kits:** EPDM / NBR, black

Remarks

u) latch recess

v) stop

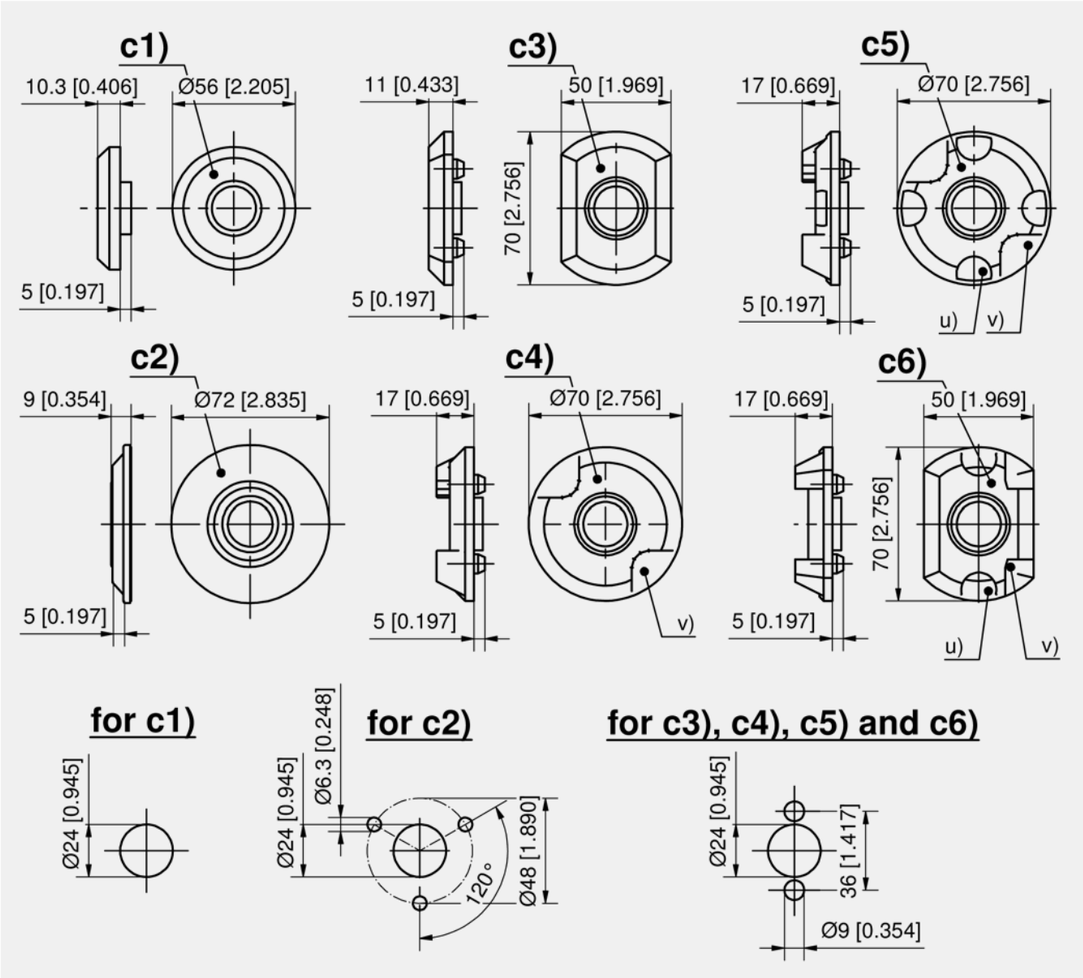

Bezels

	Part Number	Name	Version	Material	Surface	for handle	Delivery Unit
c1)	232-0401.00-00000	Bezel round	without stop	PA	black	a), a1), b), b1)	1 pc.
c2)	232-9141.00-00000	Bezel round with bearing plate	without stop, 2-part	steel	zinc plated	a), a1), b), b1)	1 pc.
c3)	232-0402.00-00000	Bezel oblong	without stop	PA	black	a), a1), b), b1)	1 pc.
c4)	232-0410.03-00000	Bezel round	stop 90°	PA	black	a), a1), b), b1)	1 pc.
c5)	232-0410.00-00001	Bezel round	stop 90°, 4 latches	PA	black	a2), a3)	1 pc.
c6)	232-0409.00-00000	Bezel oblong	stop 180°, 2 latches	PA	black	a2), a3)	1 pc.

Sealing kit

Part Number	Name	Delivery Unit
232-8710.00-01401	Sealing kit for oblong bezels	1 pc.
232-8710.00-01402	Sealing kit for round bezels	1 pc.

	Specific accessories
460	6-280.01 **Handle Inside, for Heavy Duty Latch System**
458	6-280 **Heavy Duty Latch System for HVAC Applications**
461	6-280.02 **Shafts for Heavy Duty Latches**
462	6-280.03 **Cams for Heavy Duty Latches**
463	6-280.04 **Compression Cam for Heavy Duty Latches**

6-280.05

all product details on DIRAK.com

Bridge Clamp

[6-140]

RoHS WEEE

Advantages

- Application in air conditioning technology.
- b) and d) captive by o-ring.

Materials

- **Bridge clamp:** PA, black
- **Tommy screw:** PA, black / steel, zinc plated

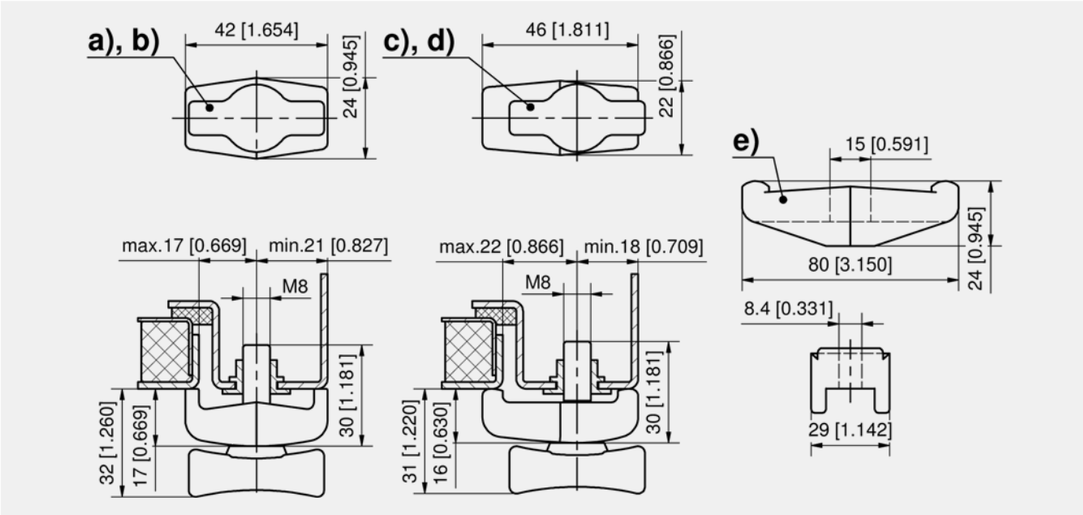

Bridge clamp

	Part Number	Variant	Version	Installation type	Delivery Unit
a)	214-9002.00-00000	symmetrical with tommy screw M8		screw-on	10 pcs.
b)	214-9002.00-00001	symmetrical with tommy screw M8	captive	screw-on	10 pcs.
c)	214-9003.00-00000	asymmetrical with tommy screw M8		screw-on	10 pcs.
d)	214-9003.00-00001	asymmetrical with tommy screw M8	captive	screw-on	10 pcs.
e)	214-0103.03-00000	symmetrical and reinforced for clamping two doors	for cylinder head screw M8	screw-on	10 pcs.

◂ all product details on DIRAK.com
6-140

Heavy Duty Latch

[6-270]

Advantages

- Heavy duty handle for equipment doors.
- RH / LH application.
- Swivel movement of the handle 90°.
- Cam 45° adjustable.

Materials

- **Handle, cam, base plate and hook:** EN-GJMW-400-5 DIN EN 1562, zinc plated
- **Shaft:** steel, zinc plated

Remarks

Hook b) fix dimension 22mm

Hook c) adjustable from 18 - 25.5mm

1. distance dimension by turning the cam 18 - 25.5mm.

2. nut mounted inwards, axle head flush with handle.

3. nut mounted outwards, axis head flush with base plate.

RoHS WEEE

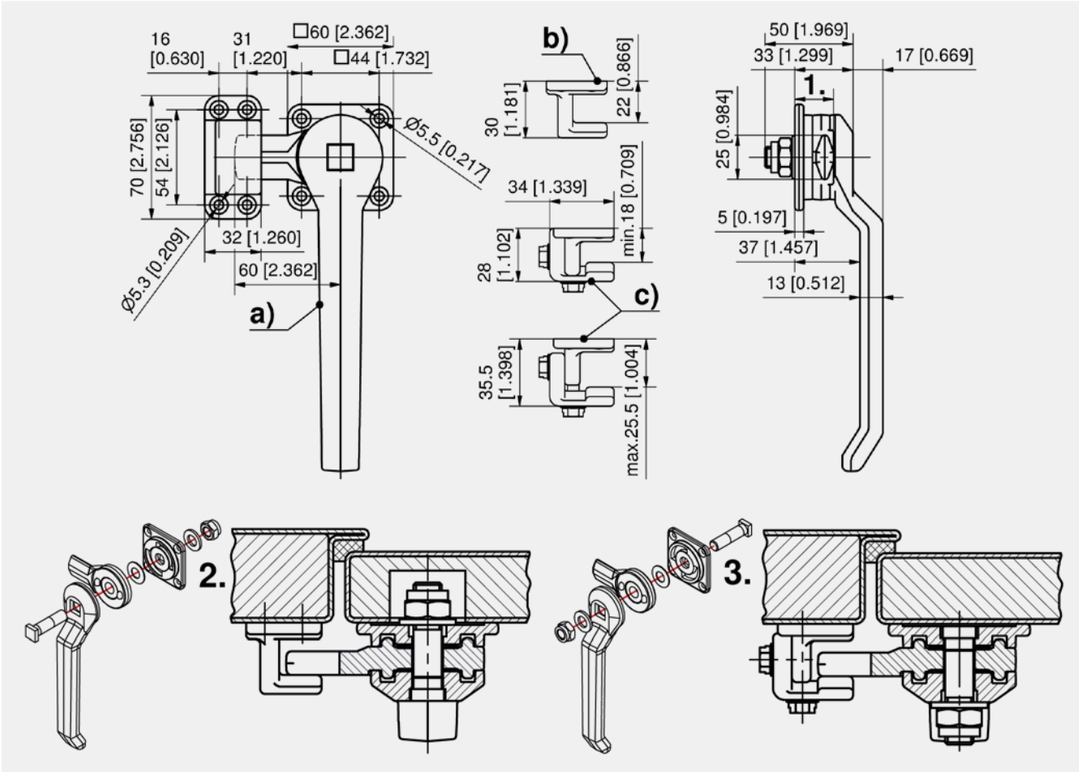

Heavy duty latch

	Part Number	Installation type	Delivery Unit
a)	232-9001.00-00000	screw-on	1 pc.

Lock hook

	Part Number	Version	Installation type	Delivery Unit
b)	232-1201.00-00000		screw-on	1 pc.
c)	232-9201.00-00000	adjustable	screw-on	1 pc.

all product details ▸ on DIRAK.com
6-270

L-Handle M10 for Padlock Stainless Steel [7-073.01]

Advantages

- RH / LH application.
- IP65 according to DIN EN 60529.
- Big padlock eye Ø11mm.
- Version a) with fastening plate and additional fastening holes for screws Ø5mm according to DIN ISO 8677.
- Version b) with fastening plate without fastening holes.
- Height adjustment of the cams by H-dimension adjustment for cams 7-077.02 or 3-point cam adapter adjustable 2-151.01 on square threaded rod M10.

Materials

- **Handle, fastening plate, square threaded rod and padlock eye:** AISI 316
- **Flat external seal:** EPDM
- **Washer:** Teflon

Remarks

(S) Door-thickness max. 5mm with the supplied screw M5x10

1. flat external seal
2. cutout version a)
3. cutout version b)
4. and 5. the padlock eye is asymmetrical. It serves as a stop for RH (4.) / LH (5.) applications.

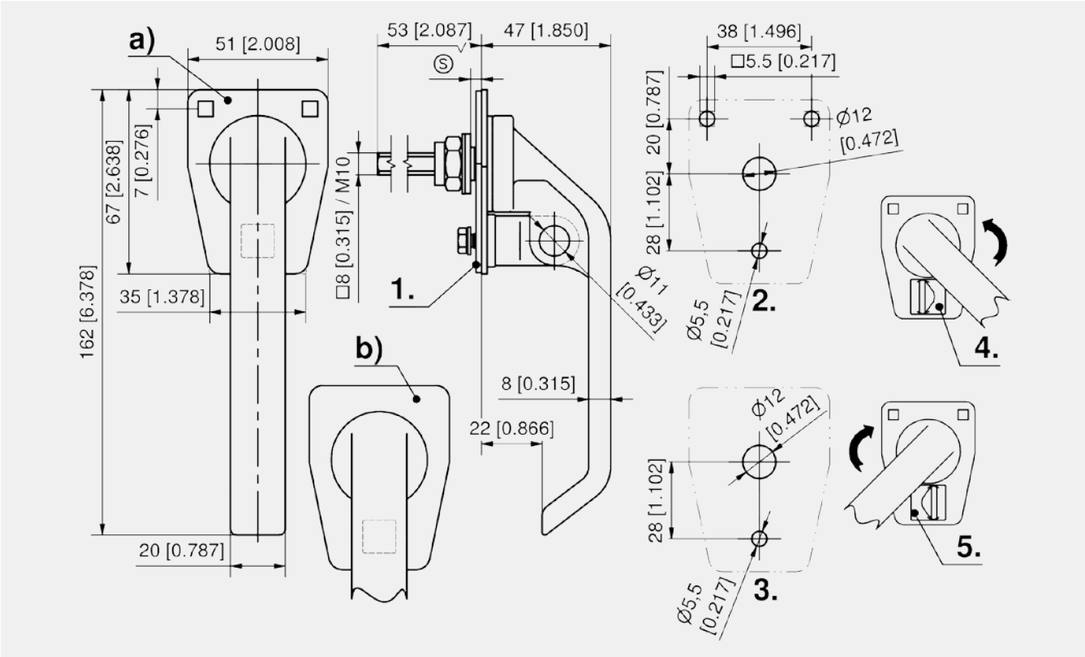

L-handle with thread M10

	Part Number	Version	Installation type	Delivery Unit
a)	281-9006.00-00000	with fastening holes	screw-on	1 pc.
b)	281-9007.00-00000	without fastening holes	screw-on	1 pc.

	Accessories
	156 7-105 **Cams L35/45 Stainless Steel**
	7-077.02 **H-Dimension Adjustment Stainless Steel**

7-073.01

◂ all product details on DIRAK.com

L-Handle 3/8" for Padlock Stainless Steel [7-073.02]

Advantages

- RH / LH application.
- IP65 according to DIN EN 60529.
- Big padlock eye Ø11mm.
- Version a) with fastening plate and additional fastening holes for screws Ø5mm.
- Version b) with fastening plate without fastening holes.

Materials

- **Handle, fastening plate, square threaded rod and padlock eye:** AISI 316
- **Flat external seal:** EPDM
- **Washer:** Teflon

Remarks

(S) Door-thickness max. 5mm with the supplied screw M5x10

1. flat external seal
2. cutout version a)
3. cutout version b)
4. and 5. the padlock eye is asymmetrical. It serves as a stop for RH (4.) / LH (5.) applications.

Delivery time on request!

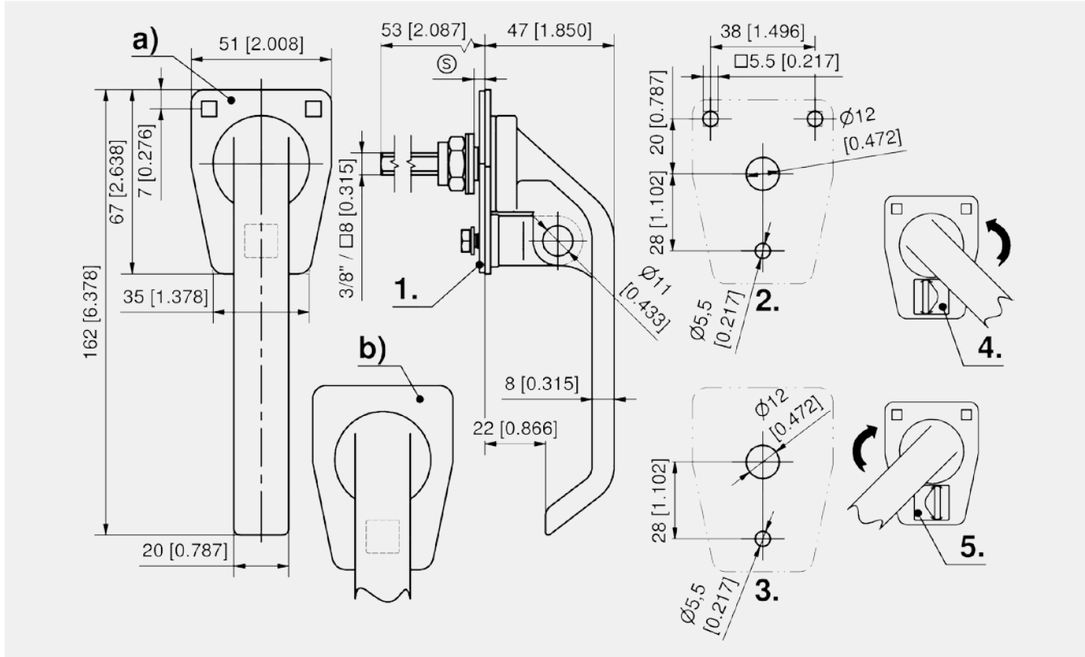

L-handle with thread 3/8“ – 16 UNC

	Part Number	Version	Installation type	Delivery Unit
a)	281-9006.00-00001	with fastening holes	screw-on	1 pc.
b)	281-9007.00-00001	without fastening holes	screw-on	1 pc.

	Accessories
	7-077.02 **H-Dimension Adjustment Stainless Steel**

all product details ▸ on DIRAK.com

7-073.02

Locking Bar System □ 10

[6-320.01]

RoHS WEEE

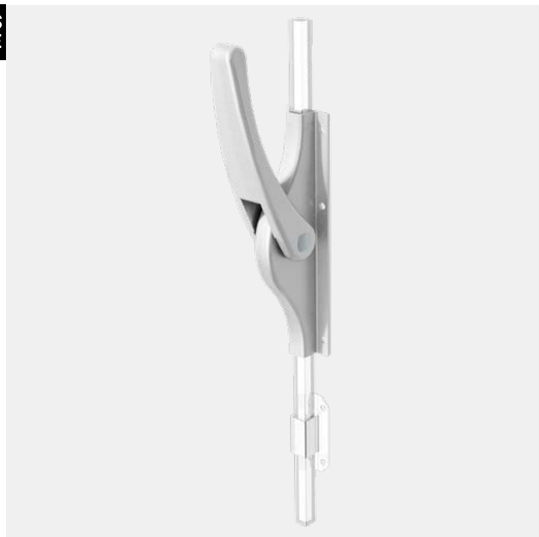

Advantages

- For heavy doors.
- Both ends come ready to be connected to the handle mechanism.
- By cutting the rod, the handle mechanism can be installed in any position.

Materials

- **Handle:** aluminium
- **Bolt box, base plate, rod guides:** steel,zinc plated

Remarks

1. stroke 19mm

Includes locking bar system incl. base plate and 2 rod guides.

Please order separately: rod one-piece

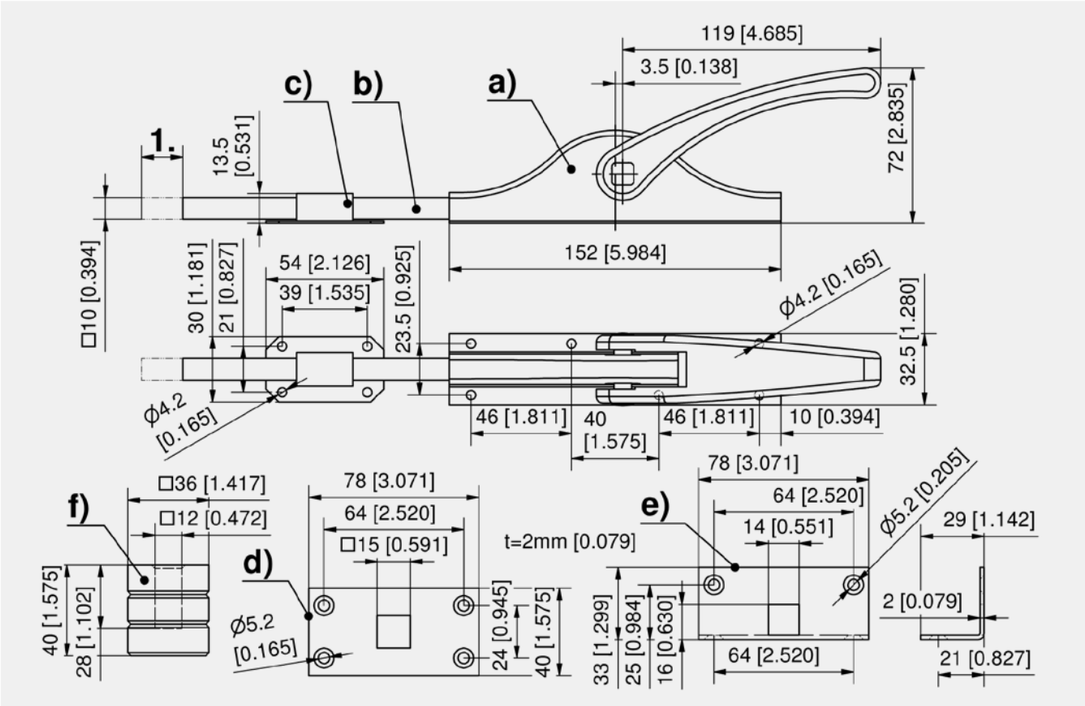

Locking bar system incl. base plate and 2 rod guides

	Part Number	Multi-point latches	Installation type	Delivery Unit
a)	249-9005.00-00000	Yes	screw-on	1 pc.

	Accessories
b)	249-0502.00-00000 **Rod for locking bar system □ 10, 2000mm**
b)	249-0503.00-00000 **Rod for locking bar system □ 10, 2500mm**
b)	249-0504.00-00000 **Rod for locking bar system □ 10, 3000mm**
c)	249-0408.00-00000 **Rod guide for locking bar system □ 10**
d)	249-0204.00-00000 **Bottom plate, straight**
e)	249-0303.00-00000 **Bottom plate, angled**
f)	249-0601.00-00000 **Bar latching bushing for concrete, 2 parts**

6-320.01

◂ all product details on DIRAK.com

Locking Bar System □ 13

[6-320.02]

RoHS WEEE

Advantages

- For heavy doors.
- Both ends come ready to be connected to the handle mechanism.
- By cutting the rod, the handle mechanism can be installed in any position.

Materials

- **Handle:** aluminium
- **Bolt box, base plate, rod guides:** steel, zinc plated

Remarks

1. stroke 19mm

Includes locking bar system incl. base plate and 3 rod guides.

Please order separately: rod one-piece.

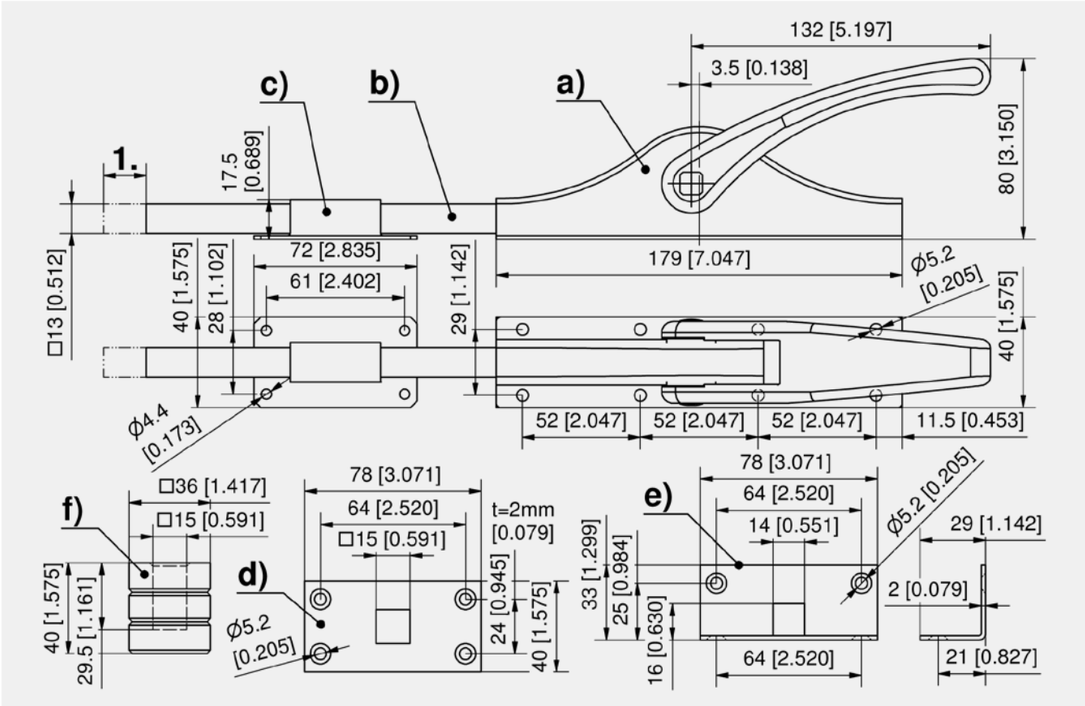

Locking bar system incl. base plate and 3 rod guides

	Part Number	Multi-point latches	Installation type	Delivery Unit
a)	249-9105.00-00000	Yes	screw-on	1 pc.

	Accessories
b)	249-0505.00-00000 **Rod for locking bar system □ 13, 2000mm**
b)	249-0506.00-00000 **Rod for locking bar system □ 13, 2500mm**
b)	249-0507.00-00000 **Rod for locking bar system □ 13, 3000mm**
c)	249-0409.00-00000 **Rod guide for locking bar system □ 13**
d)	249-0204.00-00000 **Bottom plate, straight**
e)	249-0303.00-00000 **Bottom plate, angled**
f)	249-0602.00-00000 **Bar latching bushing for concrete, 2 parts**

all product details ▸ on DIRAK.com

6-320.02

Locking Bar System □ 16

[6-320.03]

RoHS WEEE

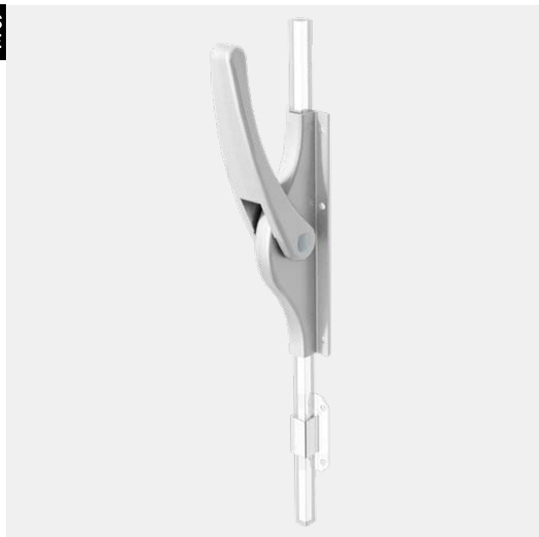

Advantages

- For heavy doors.
- Both ends come ready to be connected to the handle mechanism.
- By cutting the rod, the handle mechanism can be installed in any position.

Materials

- **Handle:** aluminium
- **Bolt box, base plate, rod guides:** steel, zinc plated

Remarks

1. stroke 28mm

Includes locking bar system incl. base plate and 4 rod guides.

Please order separately: rod one-piece.

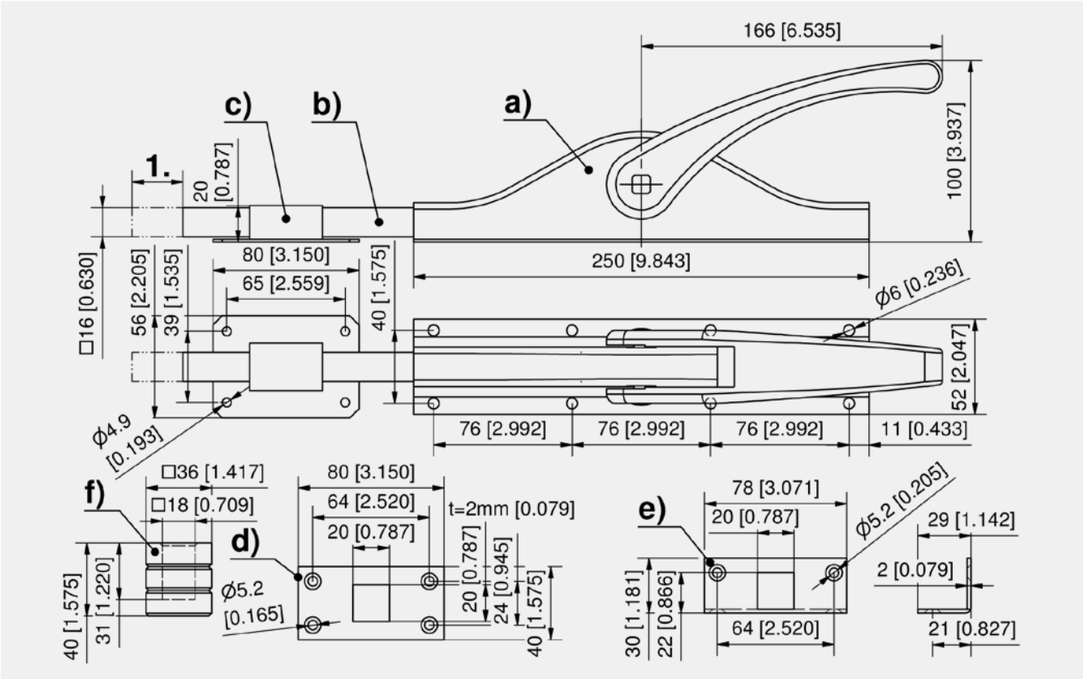

Locking bar system incl. base plate and 4 rod guides

	Part Number	Multi-point latches	Installation type	Delivery Unit
a)	249-9205.00-00000	Yes	screw-on	1 pc.

+	Specific accessories
b)	249-0508.00-00000 **Rod for locking bar system □ 16, 2000mm**
b)	249-0509.00-00000 **Rod for locking bar system □ 16, 2500mm**
b)	249-0510.00-00000 **Rod for locking bar system □ 16, 3000mm**
c)	249-0410.00-00000 **Rod guide for locking bar system □ 16**
e)	249-0304.00-00000 **Bottom plate, angled**
f)	249-0603.00-00000 **Bar latching bushing for concrete, 2 parts**
d)	249-0205.00-00000 **Bottom plate, straight**

6-320.03

◂ all product details on DIRAK.com

Slam Latch for Sliding Door

[6-152]

RoHS WEEE

Advantages

- Slam latch consists of two parts (bolt and locking element) for sliding doors.
- The door-part catches the slam-bolt and is also the limit stop for the frame-part.
- When using extruded aluminium profiles, different profile widths can be used due to oblong holes.
- Finger-tip grip allows easy opening.
- Opening by pulling the handle element.
- Self-closing by sliding the door shut.
- Both self-adhesive rectangular profiles have to be installed after assembly of the slam latch at the inner side of the locking element to absorb noise and vibrations.

Materials

- **Bold and locking element:** zinc die, black
- **Slot nuts:** steel, zinc plated
- **Cylinder barrel:** PA, black
- **Spring:** stainless steel
- **Rectangular seal:** polyurethane, black

Remarks

Fastening with 4 M6 screws (e.g. DIN912) and the slot nuts included in the scope of delivery.

1. slot nuts
2. open
3. opened
4. close

Version with cylinder barrel includes 2 keys.

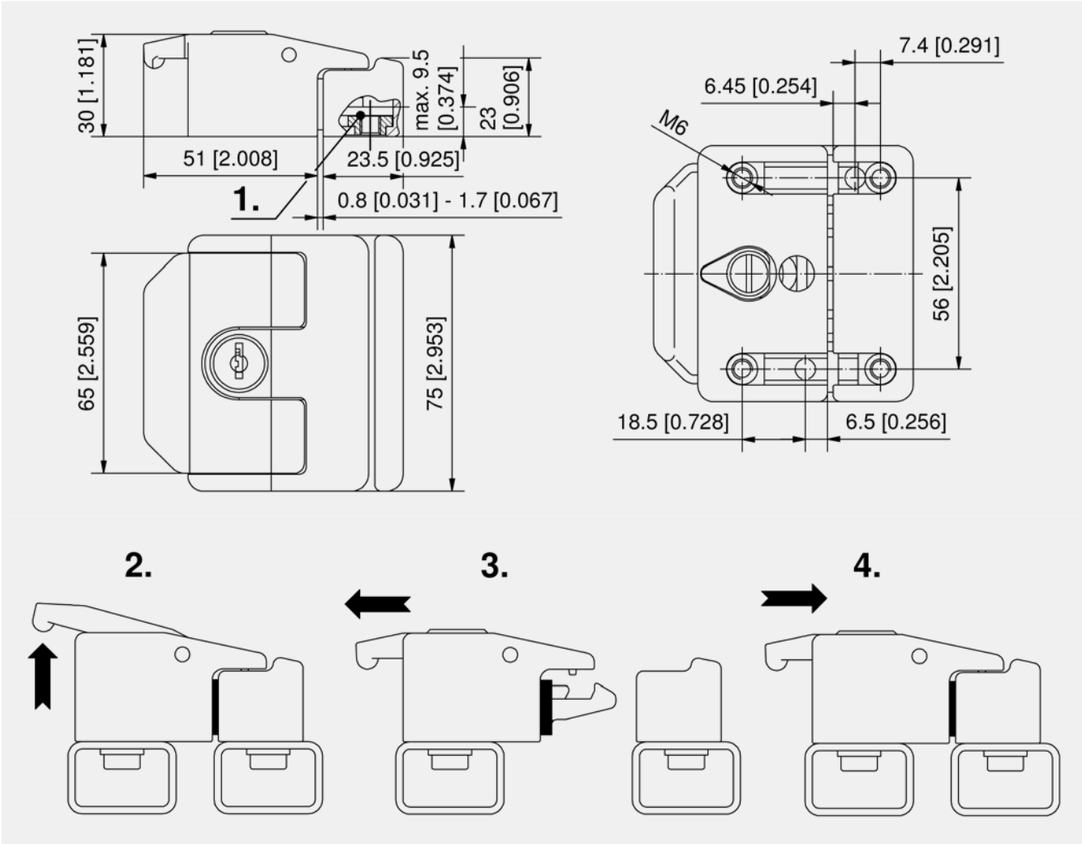

Slam latch for sliding door

Part Number	Latching type	Bolt with slam feature	Installation type	Delivery Unit
265-9610.00-00000	without lock, with plug	Yes	screw-on	1 pc.
265-9610.00-01333	keyed alike DIRAK 1333		screw-on	1 pc.
265-9610.00-09999	keyed different		screw-on	1 pc.

all product details ▸ on DIRAK.com

6-152

Machine Handle for Sliding Doors

[6-1680]

R L

RoHS WEEE

Advantages

- By pulling on the handle, the hooked cam with free stroke is disengaged and the lock released.
- Mechanical separation of the handle and the hooked cam.
- As handles any Ø30mm tubes in variable lengths can be used.
- The top and bottom latching devices can be used with or without hooked cam.
- For low or smaller doors, also possible with one hooked cam element.

Materials

- **Tube housing:** zinc die, black
- **Pins:** brass
- **Spring:** stainless steel
- **Hooked cam:** steel, zinc plated
- **Handle-tube:** steel tube with synthetic coating, black

Remarks

1. alternative cutout
2. open position
3. closed position
4. stroke 9mm

A = distance between the center of the cutouts of the endpieces.

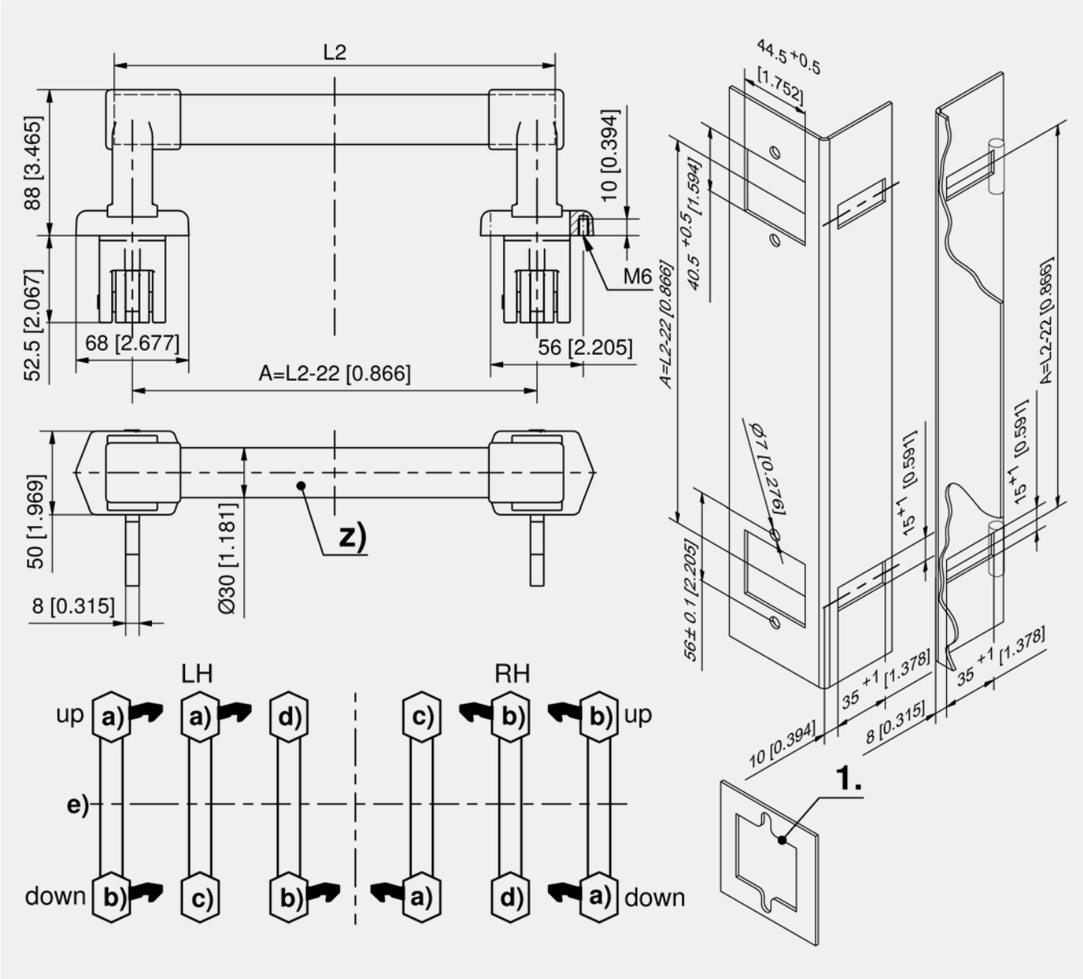

6-1680

all product details on DIRAK.com

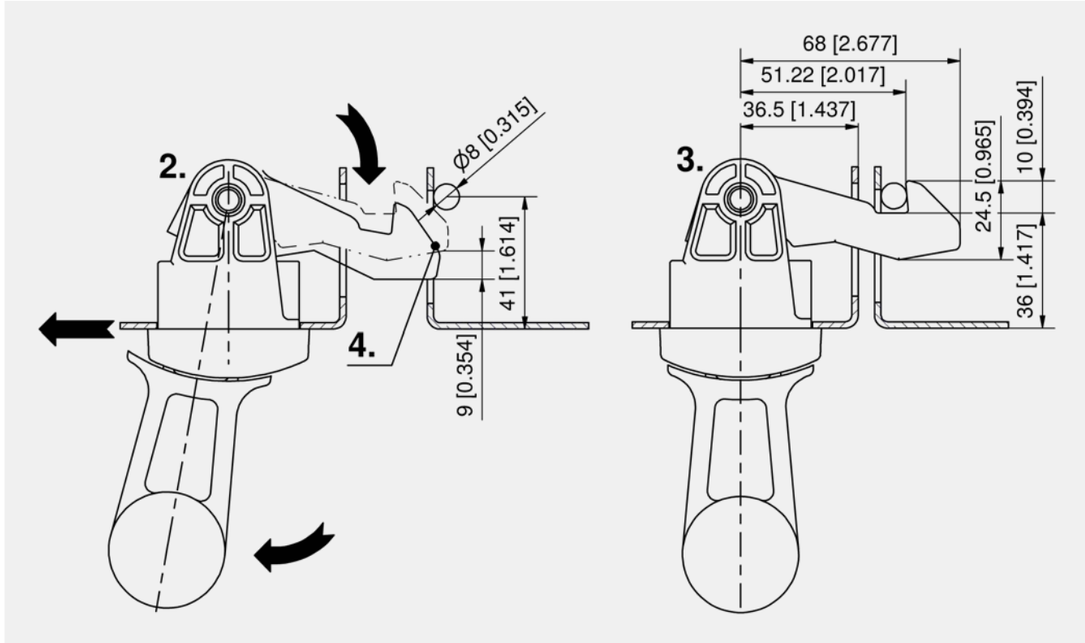

Latching device

	Part Number	Version	Delivery Unit
a)	280-9001.00-00000	with hooked cam	1 pc.
b)	280-9002.00-00000	without hooked cam	1 pc.
c)	280-9003.00-00000	with hooked cam	1 pc.
d)	280-9004.00-00000	without hooked cam	1 pc.

	Accessories
z)	213-0401.00-00000 **Steel tube, 266mm**
z)	213-0402.00-00000 **Steel tube, 366mm**
z)	213-0403.00-00000 **Steel tube, 466mm**
z)	213-0404.00-00000 **Steel tube, 566mm**
z)	213-0405.00-00000 **Steel tube, 666mm**
z)	213-0406.00-00000 **Steel tube, 766mm**

Sliding Door Latch

[1-415]

RoHS WEEE

Advantages

- Hooked cam with free stroke.
- Version RH, hook LH.
- Version LH, hook RH.
- Opening angle of the hook 15°.

Materials

- **Sliding door latch and cam:** steel, zinc plated
- **Plug:** PE, black

Remarks

Please order separately:
b) lock support

Please configure the sliding door latch with escutcheon and insert or T- and L-handle or with swinghandle.

1. example for frame cutout

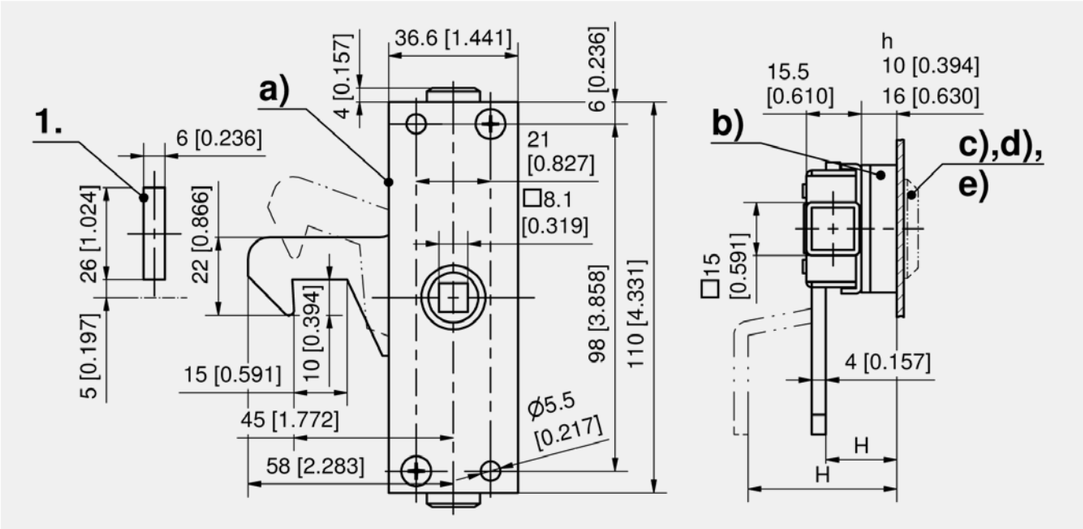

Sliding door version LH, slide direction RH

	Part Number	H-dimension without support	H-dimension with lock support A20	H-dimension with lock support A26	Installation type	Delivery Unit
a)	235-9015.00-00000	10 mm	20 mm	26 mm	screw-on	1 pc.
a)	235-9017.00-00000	32 mm	42 mm	48 mm	screw-on	1 pc.

Sliding door version RH, slide direction LH

	Part Number	H-dimension without support	H-dimension with lock support A20	H-dimension with lock support A26	Installation type	Delivery Unit
a)	235-9016.00-00000	10 mm	20 mm	26 mm	screw-on	1 pc.
a)	235-9018.00-00000	32 mm	42 mm	48 mm	screw-on	1 pc.

Accessories
b) 205, 206 235-1001.00-00000 **Lock support A20**
b) 205, 206 235-1002.00-00000 **Lock support A26**
c) 212 235-9101.00-00000 **Insert Square 6mm**
c) 212 235-9102.00-00000 **Insert square 7mm**
c) 212 235-9103.00-00000 **Insert square 8mm**
c) 212 235-9104.00-00000 **Insert triangular 6.5mm CNOMO**
c) 212 235-9105.00-00000 **Insert triangular 7mm**

Accessories
c) 212 235-9106.00-00000 **Insert triangular 8mm**
c) 212 235-9107.00-00000 **Insert double bit 3mm pin**
c) 212 235-9108.00-00000 **Insert double bit 5mm pin**
c) 212 235-9109.00-00000 **Insert Daimler Benz pin**
d) 210 1-430 **T- and L-Handles for Rod Latches**
e) 268 2-300 **Swinghandle RS 130 for Rod Latch**

all product details on DIRAK.com
1-415

Pull and Lock Hook

[1-250]

RoHS WEEE

Advantages

- Very suitable for applications on 19" racks and sliding doors.
- This device can be operated by all quarter-turns L18 with insert or handles.
- The extremely positive torque ratio allows for controlling this hook-latch by a cylinder latch.
- 90° stroke.
- Latching direction is always clockwise.
- Vibration-proof.

Materials

- **Pull and lock hook, locking bolt, line-up fork:** steel, zinc plated

Remarks

(S) Door-thickness 1.5 - 2.5mm

1. open position.

2. hook catches behind the locking bolt and continuing the closing rotation, the hook is then being pulled automatically against the locking bolt. The pulling stroke is 5mm.

3. at the end of rotation process the hook has a vibration proof latch behind the locking bolt.

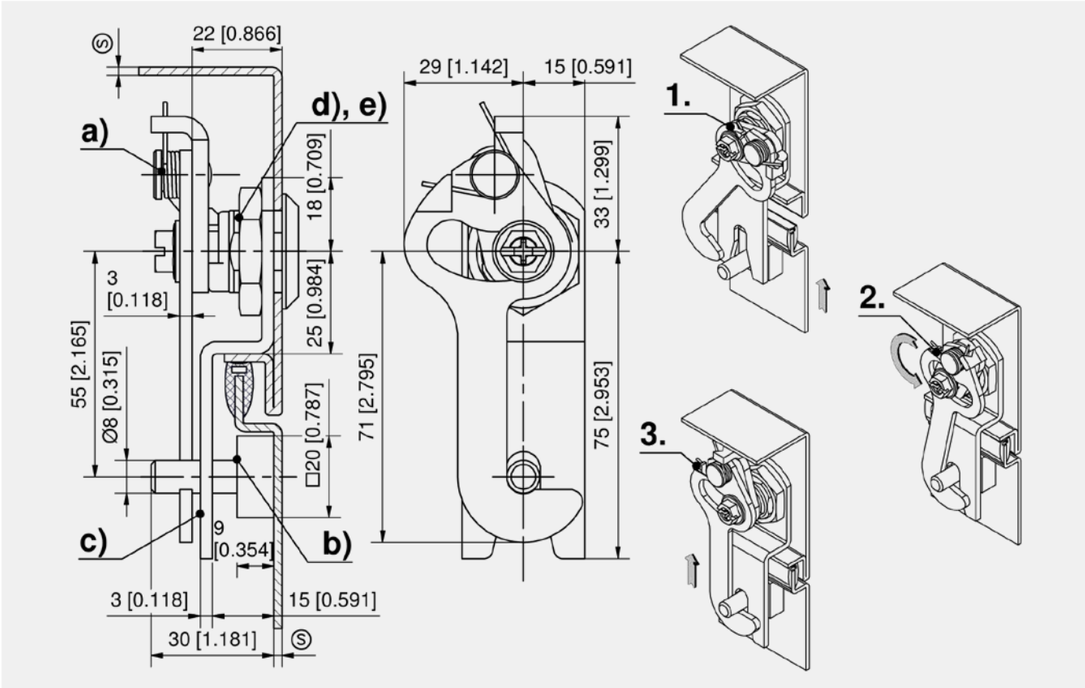

Pull and lock hook

	Part Number	Name	Compression	Vibration-proof	Installation type	Delivery Unit
a)	200-9602.00-00000	Pull and Lock Hook	5 mm	Yes	screw-on	10 pcs.
b)	200-3704.00-00000	Locking bolt for Pull and Lock Hook		No	weld-on	10 pcs.
c)	200-3703.00-00000	Line-up fork for Pull and Lock Hook		No	screw-on	10 pcs.

Accessories
d) 76 1-100 **Quarter-Turn Pr20.1 L18**
d) 75 1-100.01 **Quarter-Turn Pr20.1 L18**
d) 88 1-120 **Cylinder Quarter-Turn Pr20.1 L18**
d) 108 1-140 **Quarter-Turn with T-Handle Pr20.1 L18**
d) 114 1-150 **Quarter-Turn with L-Handle Pr20.1 L18**
e) 150 1-101 **Inserts Pr20.1**

all product details on DIRAK.com
1-250

Slam-Cam for Quarter-Turns Pr20.1

[1-265]

20

RoHS WEEE

R L

Advantages

- Slam-cam for slam doors. Locking without key or tool.
- The washer adjust the correct friction for the stroke.
- A pre-assembled quarter-turn can be installed through the cutout.
- RH and LH version.

Materials

- **Slam-cam:** zinc die
- **Spring and countersunk screw:** steel, zinc plated
- **Stepped washer:** POM

Anmerkungen

Only for quarter-turns with insert.

Please order quarter-turn completely pre-assembled by DIRAK.

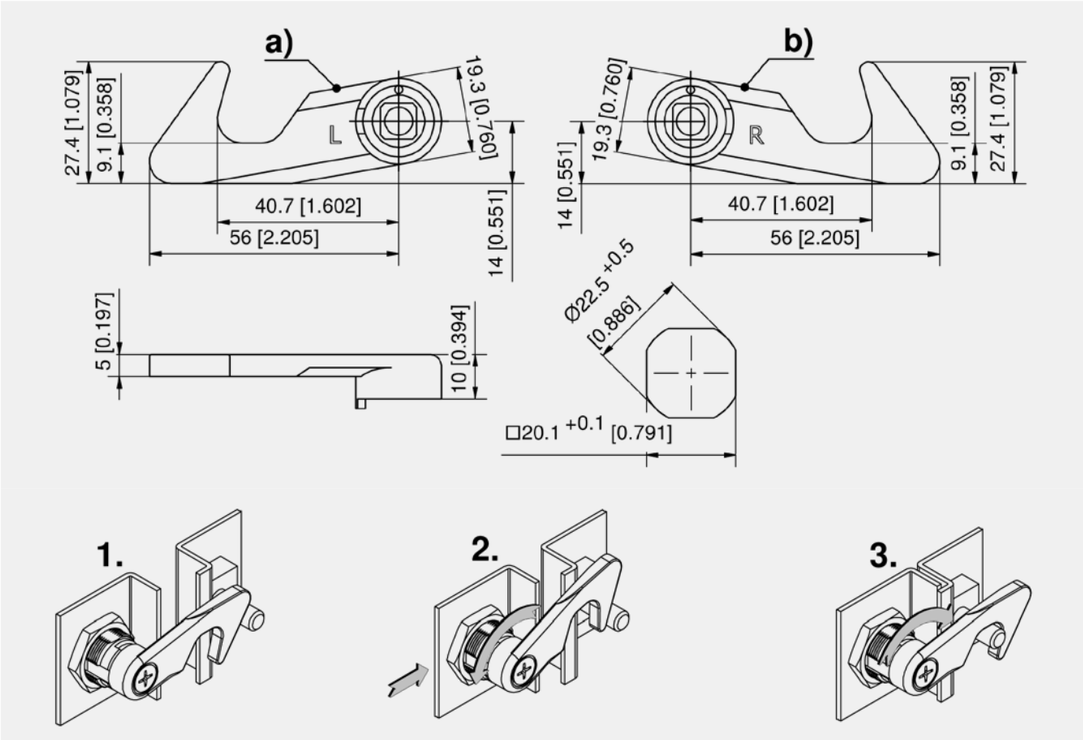

Slam-cam for inserts

	Part Number	Version	Installation type	Delivery Unit
a)	200-9639.00-00000	LH	screw-on	10 pcs.
b)	200-9638.00-00000	RH	screw-on	10 pcs.

+	Accessories
76	1-100 **Quarter-Turn Pr20.1 L18**
150	1-101 **Inserts Pr20.1**
477	200-3704.00-00000 **Locking bolt for Pull and Lock Hook**

1-265

all product details on DIRAK.com

Indexing Plunger with Handle

See page 403

Hinges

Page 606

DIRAK-SNAP-Technology.

Did you know? Most of our products are also available with DIRAK-SNAP-Technology.

Page 631

Sturdy and durable.

In outdoor applications and various other areas such as traffic engineering or energy and environmental technology, hinges should be especially durable and robust. Stainless steel hinges meet these challenges and are resistant to corrosion, chemicals and the weather.

Page 510

Potential equalization with a screw.

Fastening hinges can be this easy: A segment cutting edge and scraping tooth on the new countersunk grounding screw can be used to create electrical connections between two metal sheets even without any additional small parts.

FASTENED IN A FLASH.

The hinge with bridge fastening sits precisely in the rectangular cutout. The hinge half can be fixed in place with just one screw.

Page 522

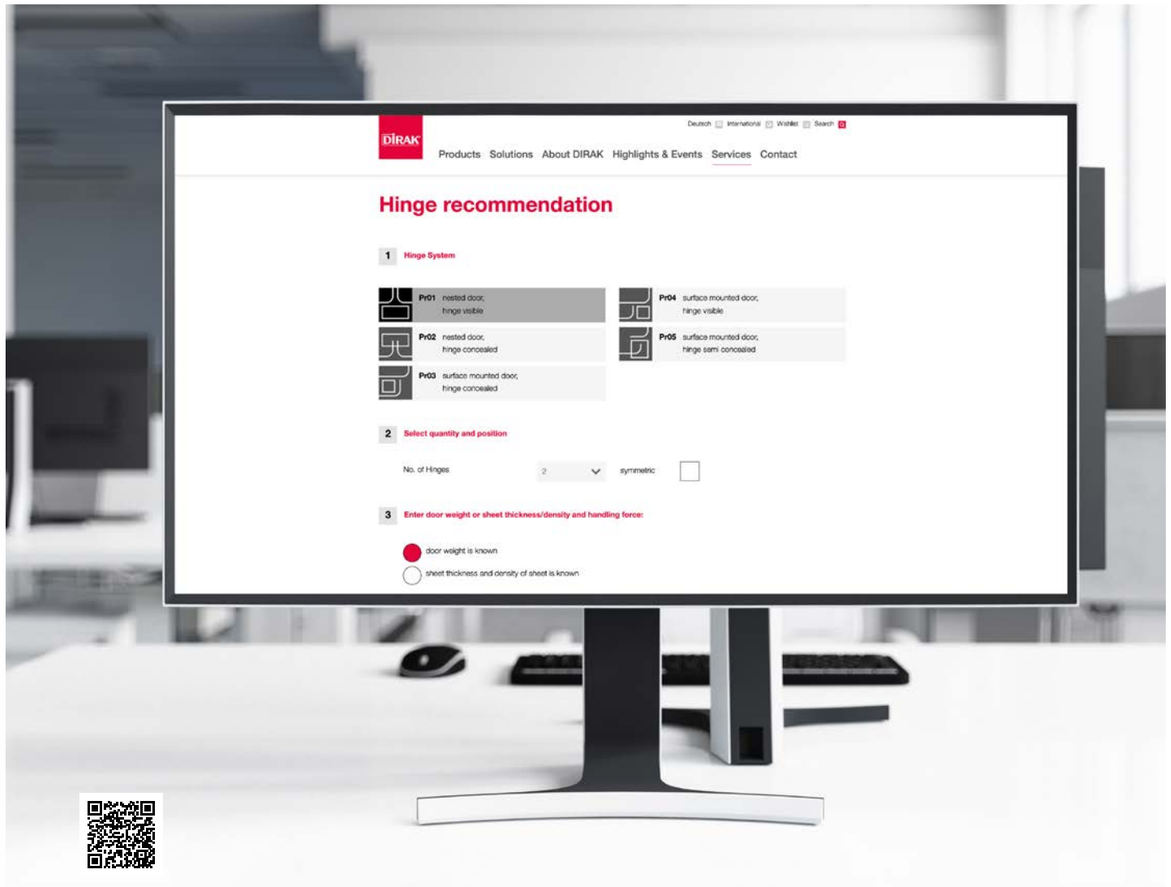

DO YOU NEED A GOOD RECOMMENDATION?

You can use **our online tool** to obtain hinge recommendations depending on the dimensions and weight of your door. Try it out!

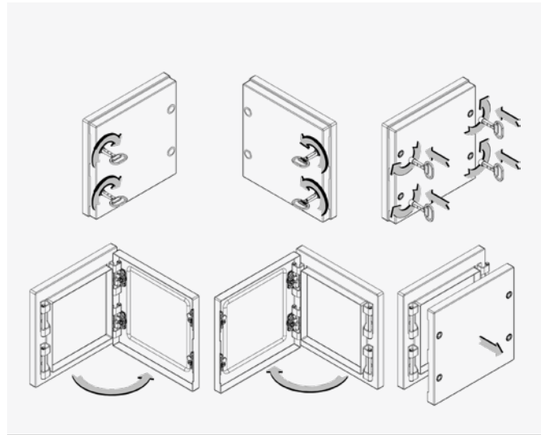

Page 94

Latch or hinge? Both!

The flush latch with integrated hinge function is both a latch and a hinge in one and makes changing the door hinge or removing the door from its hinges a simple task.

Hinges by Program

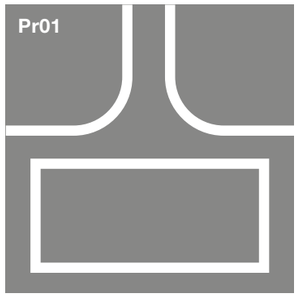

Nested door, hinge visible

Page: **490–555, 650–656**

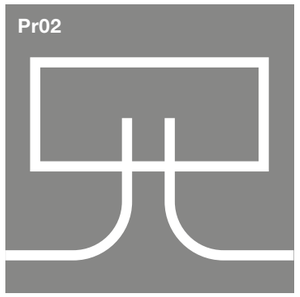

Nested door, hinge concealed

Page: **556–564**

Surface mounted door, hinge concealed

Page: **566–594**

Surface mounted door, hinge visible

Page: **490, 543–544, 595–618**

Surface mounted door, hinge partly visible

Page: **619–649**

Overview

490 Hinge Pr01/04 180° [4-348]

491 Hinge 28x30 Pr01 180° [4-249]

492 DST Hinge 22x30 Pr01 180° [4-249.01DST]

493 DST Hinge 34x30 Pr01 180° [4-249.02DST]

494 DST Hinge 28x30 Pr01 180° [4-249.03DST]

495 DST Hinge 31x30 Pr01 180° [4-249.04DST]

496 DST Hinge 25x30 Pr01 180° [4-249.05DST]

497 Hinge Pr01 180° [4-247]

498 Hinge Halves Pr01 180° [4-247.01]

500 DST Hinge 40x40 Pr01 180° [4-246DST]

502 Hinge 40x40 Pr01 180° [4-246]

503 Hinge 40x40 Pr01 180° [4-250]

504 DST Hinge 40x40 Pr01 180° [4-250DST]

505 Hinge Pr01 180° Stainless Steel [7-206]

506 Hinge 50x50 Pr01 125° Stainless Steel [7-205]

507 Hinge 50x50 Pr01 180° [4-260]

508 DST Hinge 50x50 Pr01 180° [4-260DST]

509 Hinge 50x50 Pr01 180° with Grounding Countersunk Screw [4-260.01]

509 Hinge 76x50 Pr01 180° with Grounding Countersunk Screw [4-262.01]

510 Hinge 63x50 Pr01 180° with Grounding Countersunk Screw [4-264.01]

510 Hinge 76x60 Pr01 180° with Grounding Countersunk Screw [4-272.01]

511 Hinge 76x50 Pr01 270° [4-262]

512 Hinge 63x50 Pr01 270° [4-264]

513 DST Hinge 63x50 Pr01 180° [4-264DST]

514 Hinge PA, 60x40 Pr01 180° [4-400]

515 Hinge PA, 60x60 Pr01 180° [4-401]

516 Hinge 60x60 Pr01 180° [4-270]

517 DST Hinge 60x60 Pr01 180° [4-270DST]

518 Hinge 76x60 Pr01 270° [4-272]

519 Hinge Pr01 270° [4-275]

520 Hinge Pr01 270° [4-274]

521 DST Hinge Pr01 270° [4-274DST]

522 Hinge Pr01 with Fastening Bracket 180° [4-251]

523 Hinge Pr01 with Fastening Bracket 180° Stainless Steel [7-207]

524 Hinge 76x60, adjustable Pr01 270° [4-271]

525 DST Hinge Pr01 180° [4-271DST]

Overview

526 Hinge Pr01 with Stud 180° Stainless Steel [7-201.01]

527 Hinge Pr01 180° Stainless Steel [7-201]

528 Hinge Pr01 270° Stainless Steel [7-203]

529 Hinge, adjustable Pr01 180° Stainless Steel [7-204]

530 Hinge Pr01 270° Stainless Steel [7-262]

531 Hinge Pr01 180° [4-315]

532 Hinge Pr01 270° [4-278]

533 Hinge Pr01 270° Stainless Steel [7-260]

534 Hinge Pr01 180° [4-402]

535 Hinge Pr01 200° Stainless Steel [7-220]

536 Hinge Pr01 200° [4-330]

537 Hinge Pr01 200° [4-340]

538 DST Hinge Pr01 200° [4-330DST]

539 DST Hinge Pr01 200° [4-340DST]

540 Hinge Pr01 180° [4-355]

541 DST Hinge Pr01 180° [4-355DST]

542 Hinge, adjustable Pr01 180° Stainless Steel [7-225]

543 Hinge Pr01/04 180° [4-345]

544 DST Hinge Pr01/04 180° [4-345DST]

545 Hinge Pr01 160° [4-346]

546 DST Hinge Pr01 160° [4-346DST]

547 2D Hinge, adjustable Pr01 180° [4-351]

548 3D Hinge, adjustable Pr01 180° [4-350]

549 DST 3D Hinge, adjustable Pr01 180° [4-350DST]

550 Hinge Pr01 180° [4-194]

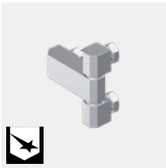
551 Hinge Pr01 180° Stainless Steel [7-123]

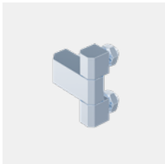
552 Hinge Pr01 180° [4-230]

553 Hinge Pr01 180° Stainless Steel [7-125]

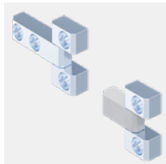
554 Hinge Pr01 180° [4-225]

555 Hinge Pr01 180° [4-240]

556 Concealed Hinge Pr02 90° [4-100]

557 Concealed Hinge Pr02 90° Stainless Steel [7-107]

558 Pin Hinge with spring-loaded Pin Pr02 110° [4-390]

559 Pin Hinge with spring-loaded Pin Pr02 110° St.-Steel [7-251]

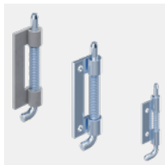
560 Pin Hinge Pr02 120° [4-392]

561 Pin Hinge Pr02 120° Stainless Steel [7-250]

562 Pin Hinge Pr02 120° [4-393]

563 Pin Hinge Pr02 120° [4-394]

564 Concealed Hinge Pr02 120° [4-095]

566 Concealed Hinge Pr03 125° [4-118]

567 Concealed Hinge Pr03 125° Stainless Steel [7-138]

568 Concealed Hinge Pr03 115° [4-119]

569 Concealed Hinge Pr03 115° Stainless Steel [7-139]

570 Concealed Hinge Pr03 120° [4-120]

571 Concealed Hinge Pr03 120° Stainless Steel [7-140]

572 Concealed Hinge Pr03 120° [4-122]

573 Concealed Hinge Pr03 120° Stainless Steel [7-145]

574 Concealed Hinge Pr03 120° [4-124]

575 Concealed Hinge Pr03 120° [4-124.01]

576 Concealed Hinge Pr03 120° [4-125]

577 Concealed Hinge Pr03 120° Stainless Steel [7-165]

578 Concealed Hinge Pr03 120° [4-124.02]

580 Concealed Hinge Pr03 120° Stainless Steel [7-165.01]

582 DST Concealed Hinge Pr03 130° [4-124DST]

584 DST Concealed Hinge Pr03 130° Stainless Steel [7-164DST]

586 DST Concealed Hinge Pr03 130° [4-125DST]

588 Concealed Hinge Pr03 120° Stainless Steel [7-166]

589 Concealed Hinge Pr03 120° Stainless Steel [7-167]

590 Concealed Hinge Pr03 120° [4-130]

591 Concealed Hinge Pr03 120° Stainless Steel [7-150]

592 Concealed Hinge Pr03 120° [4-140]

593 Concealed Hinge Pr03 120° Stainless Steel [7-160]

594 Concealed Hinge Pr03 120° [4-135]

595 Corner Hinge two-part Pr04 180° [4-190]

596 Corner Hinge three-part Pr04 180° [4-200]

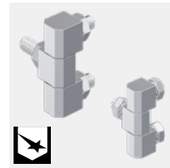
597 Corner Hinge Pr04 180° Stainless Steel [7-110_7-120]

598 Corner Hinge Pr04 180° Tempered Steel [4-220]

599 Corner Hinge Pr04 180° [4-284]

600 Corner Hinge Pr04 180° [4-282]

601 Corner Hinge Pr04 180° [4-280]

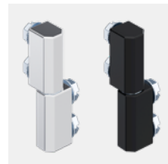
602 Corner Hinge Pr04 180° [4-283]

603 DST Corner Hinge Pr04 180° [4-283DST]

Hinges

Overview

604 Corner Hinge Pr04 180° [4-285]

604 Corner Hinge Pr04 180° [4-285.01]

605 Corner Hinge Pr04 180° Stainless Steel [7-210]

605 Corner Hinge Pr04 180° Stainless Steel [7-211]

606 DST Corner Hinge Pr04 180° [4-285DST]

607 DST Corner Hinge Pr04 180° Stainless steel [7-285DST]

608 Corner Hinge Pr04 180° [4-290]

609 Corner Hinge Pr04 180° [4-286]

610 Corner Hinge Pr04 180° [4-308]

611 Corner Hinge Pr04 180° Stainless Steel [7-130]

612 Corner Hinge Pr04 180° [4-310]

614 Corner Hinge Pr04 180° [4-320]

615 Corner Hinge Pr04 180° [4-323]

616 Corner Hinge Pr04 180° [4-326]

617 Corner Hinge Pr04 180° [4-370]

618 DST Corner Hinge Pr04 180° [4-349DST]

619 Hinge Pr05 180° [4-145]

620 Hinge Pr05 180° [4-150]

621 Hinge Pr05 180° Stainless Steel [7-133]

622 Hinge Pr05 180° Stainless Steel [7-134]

623 Hinge Pr05 180° [4-152]

624 Hinge Pr05 180° Stainless Steel [7-132]

625 DST Hinge Pr05 180° [4-152DST]

626 DST Hinge Pr05 180° Stainless steel [7-152DST]

627 Hinge Pr05 180° [4-161]

628 DST Hinge Pr05 180° [4-150DST]

629 Hinge Pr05 180° [4-160]

630 Hinge Pr05 180° Stainless Steel [7-135]

631 Hinge Pr05 180° Stainless Steel [7-131]

632 Hinge Pr05 180° [4-170]

633 Hinge Pr05 180° [4-180]

634 Hinge Pr05 180° [4-185]

635 DST Hinge Pr05 180° [4-161DST]

636 Hinge for Single Cabinet Pr05 180° [4-155]

637 Hinge Pr05 180° Stainless Steel [7-136]

638 Hinge Pr05 180° [4-181]

639 Hinge Pr05 180° [4-182]

640 DST Hinge Pr05 180° [4-182.01DST]

641 DST Hinge Pr05 180° [4-182.02DST]

642 DST Hinge Pr05 180° [4-182.03DST]

643 Hinge Pr05 180° [4-182.05]

644 DST Hinge Pr05 180° [4-182.05DST]

645 DST Hinge Pr05 180° [4-182.06DST]

646 DST Hinge Pr05 180° [4-182.07DST]

647 Hinge Pr05 180° [4-183]

648 DST Hinge Pr05 180° [4-184.01DST]

649 DST Hinge Pr05 180° [4-184.05DST]

650 Detent Hinge 60x60 Pr01 175° [4-243]

651 Detent Hinge Pr01 120° / 180° Stainless Steel [7-222]

652 Torque Hinge Pr01 270° [4-708]

653 Torque Hinge Pr01 270° [4-709]

654 Torque Hinge Pr01 270° [4-701]

655 Torque Hinge Pr01 270° [4-702]

656 Torque Hinge Pr01 270° [4-703]

Hinge Pr01/04 180°

[4-348]

Advantages

- For nested or surface mounted doors.
- Hinge visible.
- RH and LH version.
- 180° Opening angle.
- Screw-on.
- Lift-off.
- Pin cast-on into frame-part.

Materials

- **Frame- and door-part:** zinc die, black
- **Pin:** stainless steel

Remarks

RH version drawn

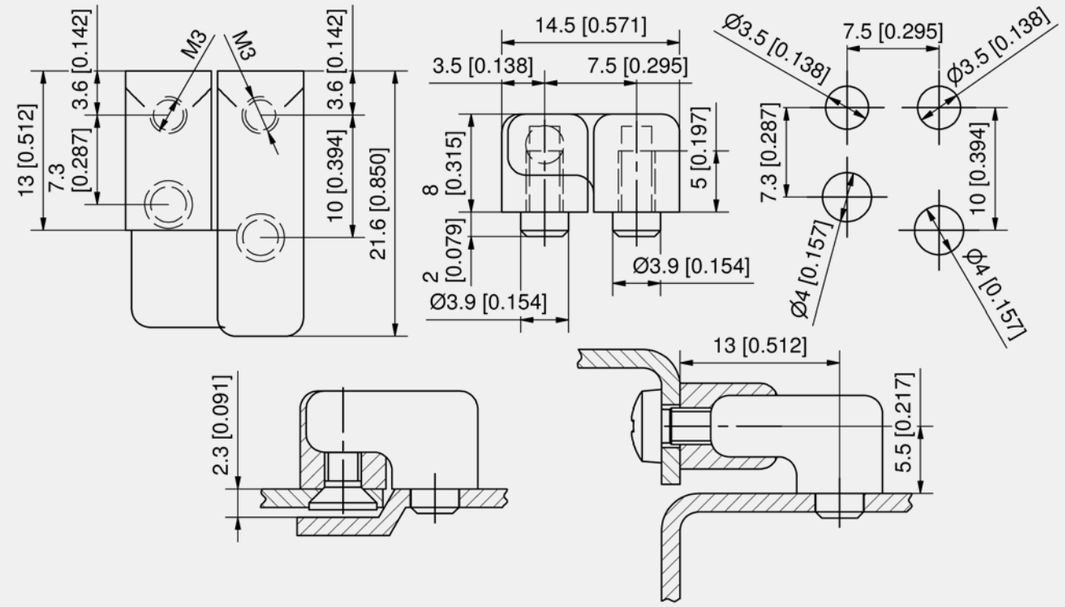

Hinge

Part Number	Version	Pin version	Installation type	Delivery Unit
250-9106.00-00000	LH version	cast-on	screw-on	10 pcs.
250-9107.00-00000	RH version	cast-on	screw-on	10 pcs.

4-348
◂ all product details on DIRAK.com

Hinge 28x30 Pr01 180°

[4-249]

Advantages

- For nested doors.
- Hinge visible.
- RH / LH application
- 180° Opening angle.
- Adjustments are possible with respective bores provided.

Materials

- **Hinge parts:** zinc die, matte chrome plated or black
- **Pin:** stainless steel
- **Nut plate:** steel, zinc plated

Remarks

The nut plate can be mounted in different ways, according to the application. (Please order separately)

Further types with DIRAK-SNAP-Technology see product system 4-249.01DST, 4-249.02DST, 4-249.03DST, 4-249.04DST, 4-249.05DST.

1. teeth on nut plate to increase friction and, if necessary, for earthing

2. cutout for adjustment

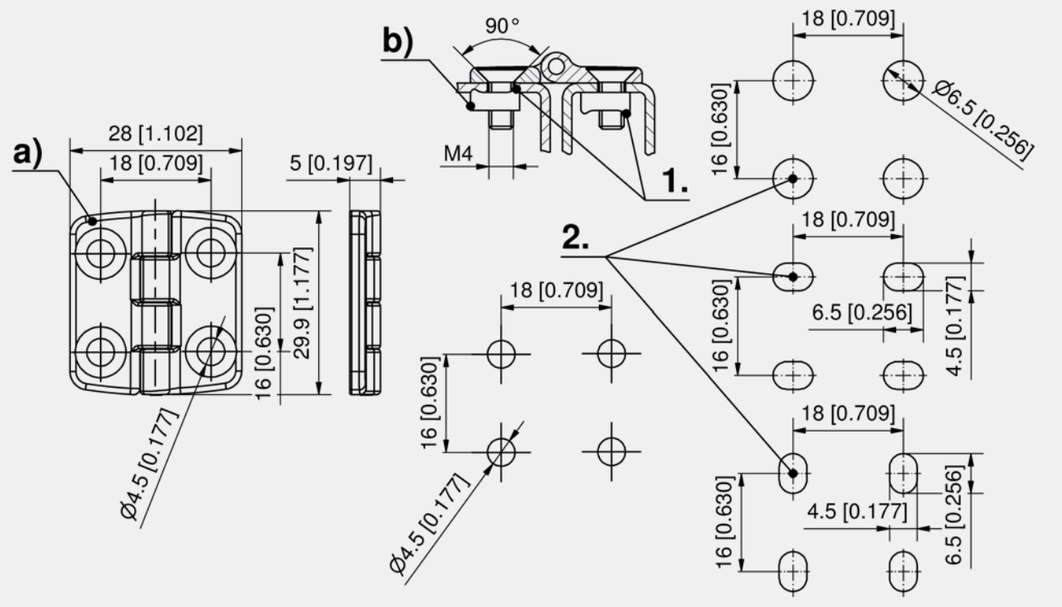

Hinge, zinc die

	Part Number	Surface	Pin version	Installation type	Delivery Unit
a)	218-9501.00-00000	black	pressed in	screw-on	10 pcs.
a)	218-9502.00-00000	matte chrome plated	pressed in	screw-on	10 pcs.

	Accessories
b) 757	218-0907.15-00000 **Nut Plates**

all product details ▸ on DIRAK.com
4-249

DST Hinge 22x30 Pr01 180°

[4-249.01DST]

Advantages

- Hinge with DIRAK-SNAP-Technology.
- For nested doors.
- Hinge visible.
- RH / LH application.
- 180° Opening angle.
- Tool-less installation.
- Seismic-proof according to GR-63-CORE, Issue 4.
- Installation by a simple push into the cutout.

Materials

- **Hinge-parts:** zinc die, matte chrome plated or black
- **Pin:** stainless steel
- **Snap wedges:** sintered steel, zinc plated

Remarks

1. alternative cutout
2. indentation as a guideline for correct positional installation to avoid errors

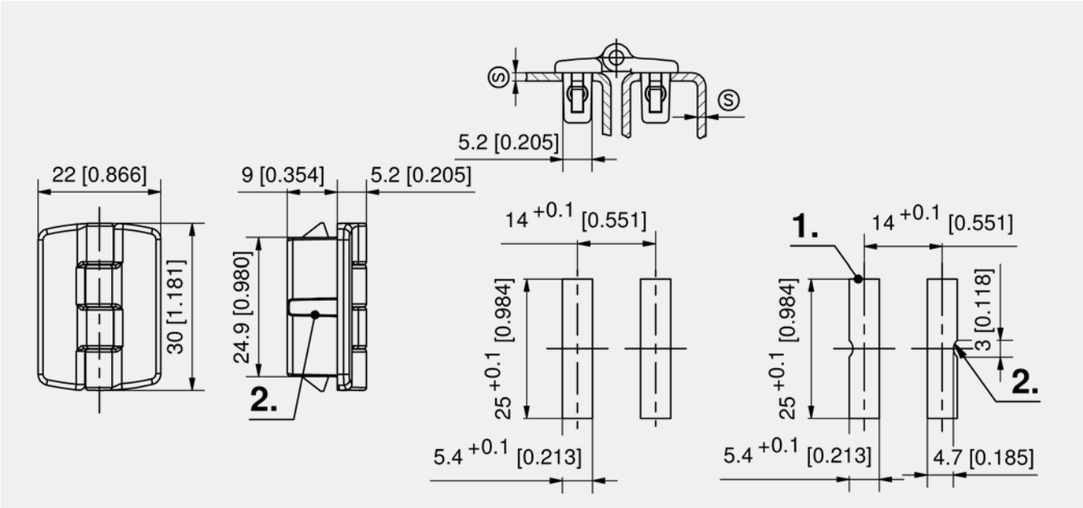

Hinge, zinc die

Part Number	Clamping range (S)	Surface	Pin version	Installation type	Delivery Unit
418-9301.33-00008	0.6 - 0.9 mm	black	pressed in	tool-less	10 pcs.
418-9301.33-00010	0.8 - 1.1 mm	black	pressed in	tool-less	10 pcs.
418-9301.33-00014	1.2 - 1.5 mm	black	pressed in	tool-less	10 pcs.
418-9301.33-00020	1.8 - 2.1 mm	black	pressed in	tool-less	10 pcs.
418-9301.33-00024	2.2 - 2.5 mm	black	pressed in	tool-less	10 pcs.
418-9301.40-00008	0.6 - 0.9 mm	matte chrome plated	pressed in	tool-less	10 pcs.
418-9301.40-00010	0.8 - 1.1 mm	matte chrome plated	pressed in	tool-less	10 pcs.
418-9301.40-00014	1.2 - 1.5 mm	matte chrome plated	pressed in	tool-less	10 pcs.
418-9301.40-00020	1.8 - 2.1 mm	matte chrome plated	pressed in	tool-less	10 pcs.
418-9301.40-00024	2.2 - 2.5 mm	matte chrome plated	pressed in	tool-less	10 pcs.

Accessories
764 292-0306.80-02530 **Tool for uninstallation**

4-249.01DST

◂ all product details on DIRAK.com

DST Hinge 34x30 Pr01 180°

[4-249.02DST]

Advantages

- Hinge with DIRAK-SNAP-Technology.
- For nested doors.
- Hinge visible.
- RH / LH application.
- 180° Opening angle.
- Tool-less installation.
- Seismic-proof according to GR-63-CORE, Issue 4.
- Installation by a simple push into the cutout.

Materials

- **Hinge-parts:** zinc die, matte chrome plated or black
- **Pin:** stainless steel
- **Snap wedges:** sintered steel, zinc plated

Remarks

1. alternative cutout
2. indentation as a guideline for correct positional installation to avoid errors

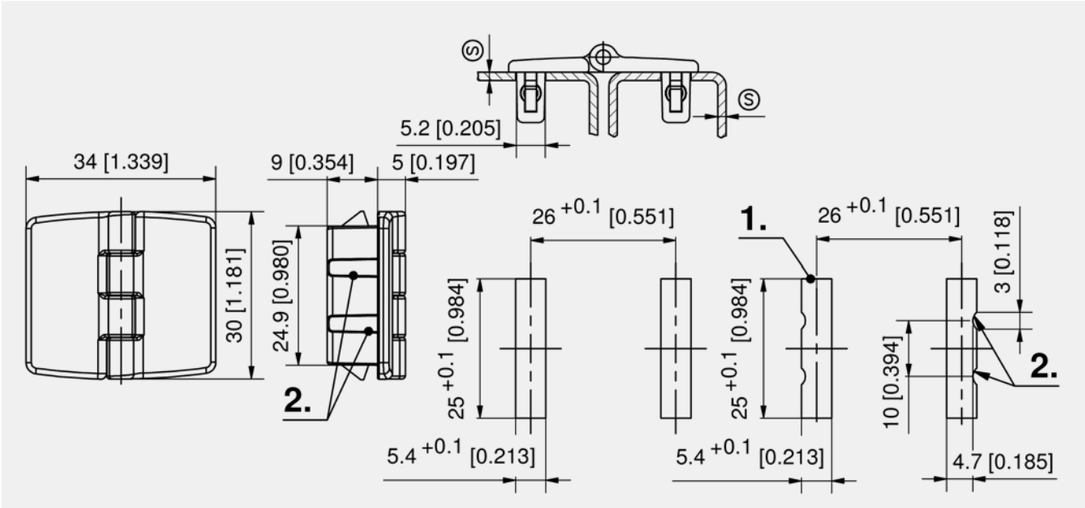

Hinge, zinc die

Part Number	Clamping range (S)	Surface	Pin version	Installation type	Delivery Unit
418-9302.33-00008	0.6 - 0.9 mm	black	pressed in	tool-less	10 pcs.
418-9302.33-00010	0.8 - 1.1 mm	black	pressed in	tool-less	10 pcs.
418-9302.33-00014	1.2 - 1.5 mm	black	pressed in	tool-less	10 pcs.
418-9302.33-00020	1.8 - 2.1 mm	black	pressed in	tool-less	10 pcs.
418-9302.33-00024	2.2 - 2.5 mm	black	pressed in	tool-less	10 pcs.
418-9302.40-00008	0.6 - 0.9 mm	matte chrome plated	pressed in	tool-less	10 pcs.
418-9302.40-00010	0.8 - 1.1 mm	matte chrome plated	pressed in	tool-less	10 pcs.
418-9302.40-00014	1.2 - 1.5 mm	matte chrome plated	pressed in	tool-less	10 pcs.
418-9302.40-00020	1.8 - 2.1 mm	matte chrome plated	pressed in	tool-less	10 pcs.
418-9302.40-00024	2.2 - 2.5 mm	matte chrome plated	pressed in	tool-less	10 pcs.

Accessories
764 292-0306.80-02530 **Tool for uninstallation**

all product details ▸ on DIRAK.com

4-249.02DST

DST Hinge 28x30 Pr01 180°

[4-249.03DST]

Advantages

- Hinge with DIRAK-SNAP-Technology.
- For nested doors.
- Hinge visible.
- RH / LH application.
- 180° Opening angle.
- Tool-less installation by a simple push into the cutout.
- To guarantee a correct positional installation, the cutouts can have indentation.

Materials

- **Hinge-parts:** zinc die, matte chrome plated or black
- **Pin:** stainless steel
- **Snap wedges:** sintered steel, zinc plated

Remarks

1. alternative cutout
2. indentation as a guideline for correct positional installation to avoid errors

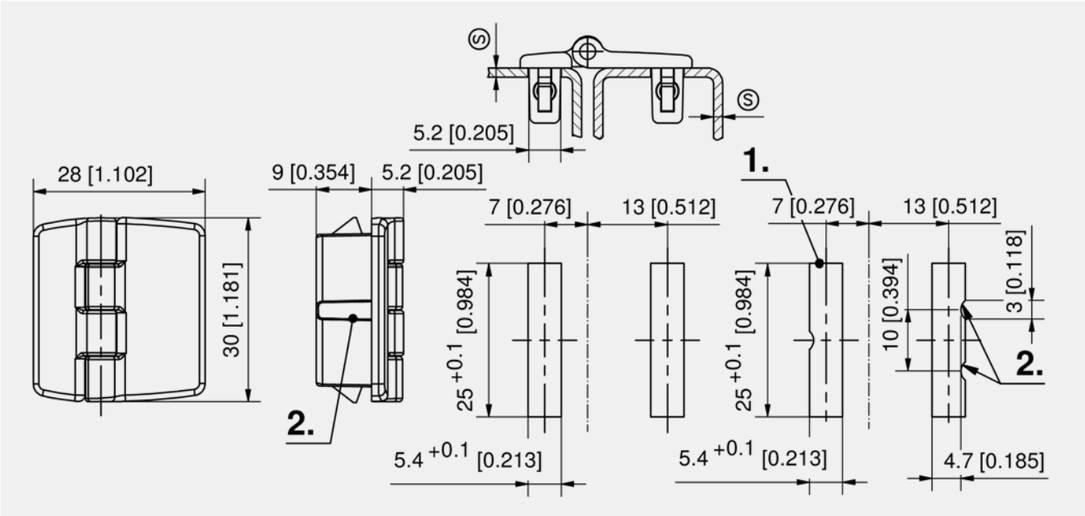

Hinge, zinc die

Part Number	Clamping range (S)	Surface	Pin version	Installation type	Delivery Unit
418-9303.33-00008	0.6 - 0.9 mm	black	pressed in	tool-less	10 pcs.
418-9303.33-00010	0.8 - 1.1 mm	black	pressed in	tool-less	10 pcs.
418-9303.33-00014	1.2 - 1.5 mm	black	pressed in	tool-less	10 pcs.
418-9303.33-00020	1.8 - 2.1 mm	black	pressed in	tool-less	10 pcs.
418-9303.33-00024	2.2 - 2.5 mm	black	pressed in	tool-less	10 pcs.
418-9303.40-00008	0.6 - 0.9 mm	matte chrome plated	pressed in	tool-less	10 pcs.
418-9303.40-00010	0.8 - 1.1 mm	matte chrome plated	pressed in	tool-less	10 pcs.
418-9303.40-00014	1.2 - 1.5 mm	matte chrome plated	pressed in	tool-less	10 pcs.
418-9303.40-00020	1.8 - 2.1 mm	matte chrome plated	pressed in	tool-less	10 pcs.
418-9303.40-00024	2.2 - 2.5 mm	matte chrome plated	pressed in	tool-less	10 pcs.

	Accessories
764	292-0306.80-02530 **Tool for uninstallation**

4-249.03DST
◂ all product details on DIRAK.com

DST Hinge 31x30 Pr01 180°

[4-249.04DST]

Advantages

- Hinge with DIRAK-SNAP-Technology.
- For nested doors.
- Hinge visible.
- RH / LH application.
- 180° Opening angle.
- Installation tool-less or tool-less / screw-on.
- With the screw fastened versions countersunk screws according DIN 7991 or according DIN EN ISO 10642 can be used.
- Adjustments are possible with respective bores provided.

Materials

- **Hinge-parts:** zinc die, matte chrome plated or black
- **Pin:** stainless steel
- **Snap wedges:** sintered steel, zinc plated

Remarks

1. alternative cutout
2. indentation as a guideline for correct positional installation to avoid errors
3. teeth on the nut plate to increase friction and, if necessary, for earthing

The nut plate can be mounted in different ways, according to the application. (Please order separately)

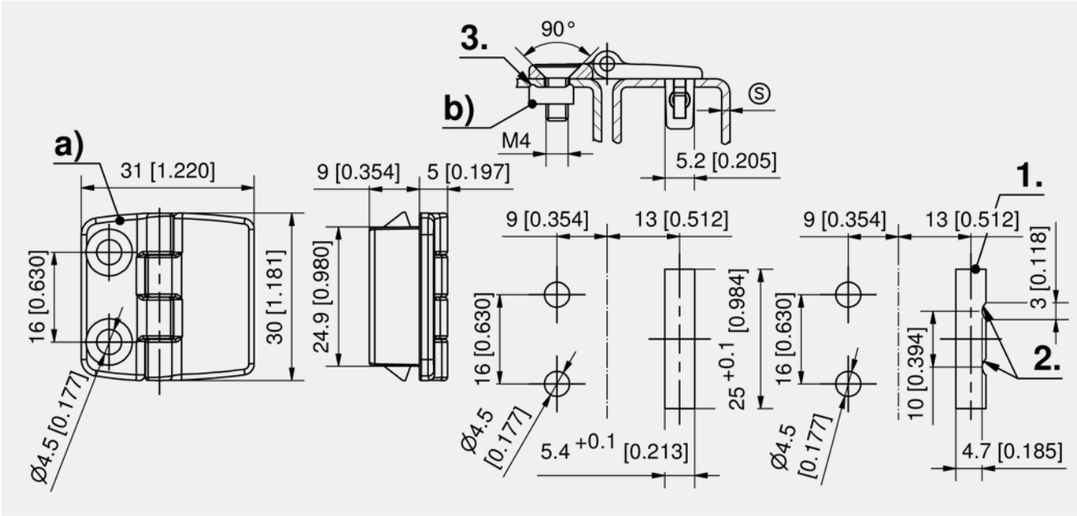

Hinge, zinc die

	Part Number	Clamping range (S)	Surface	Pin version	Installation type	Delivery Unit
a)	418-9304.33-00008	0.6 - 0.9 mm	black	pressed in	tool-less / screw-on	10 pcs.
a)	418-9304.33-00010	0.8 - 1.1 mm	black	pressed in	tool-less / screw-on	10 pcs.
a)	418-9304.33-00014	1.2 - 1.5 mm	black	pressed in	tool-less / screw-on	10 pcs.
a)	418-9304.33-00020	1.8 - 2.1 mm	black	pressed in	tool-less / screw-on	10 pcs.
a)	418-9304.33-00024	2.2 - 2.5 mm	black	pressed in	tool-less / screw-on	10 pcs.
a)	418-9304.40-00008	0.6 - 0.9 mm	matte chrome plated	pressed in	tool-less / screw-on	10 pcs.
a)	418-9304.40-00010	0.8 - 1.1 mm	matte chrome plated	pressed in	tool-less / screw-on	10 pcs.
a)	418-9304.40-00014	1.2 - 1.5 mm	matte chrome plated	pressed in	tool-less / screw-on	10 pcs.
a)	418-9304.40-00020	1.8 - 2.1 mm	matte chrome plated	pressed in	tool-less / screw-on	10 pcs.
a)	418-9304.40-00024	2.2 - 2.5 mm	matte chrome plated	pressed in	tool-less / screw-on	10 pcs.

	Accessories
b) 757	218-0907.15-00000 **Nut Plates**
764	292-0306.80-02530 **Tool for uninstallation**

all product details ▸ on DIRAK.com
4-249.04DST

DST Hinge 25x30 Pr01 180°

[4-249.05DST]

Advantages

- For nested doors.
- Hinge visible.
- RH / LH application.
- 180° Opening angle.
- Installation tool-less or tool-less / screw-on.
- With the screw fastened versions countersunk screws according DIN 7991 or according DIN EN ISO 10642 can be used.
- Adjustments are possible with respective bores provided.

Materials

- **Hinge-parts:** zinc die, matte chrome plated or black
- **Pin:** stainless steel
- **Snap wedges:** sintered steel, zinc plated

Remarks

1. alternative cutout

2. indentation as a guideline for correct positional installation to avoid errors

3. teeth on the nut plate to increase friction and, if necessary, for earthing

The nut plate can be mounted in different ways, according to the application. (Please order separately)

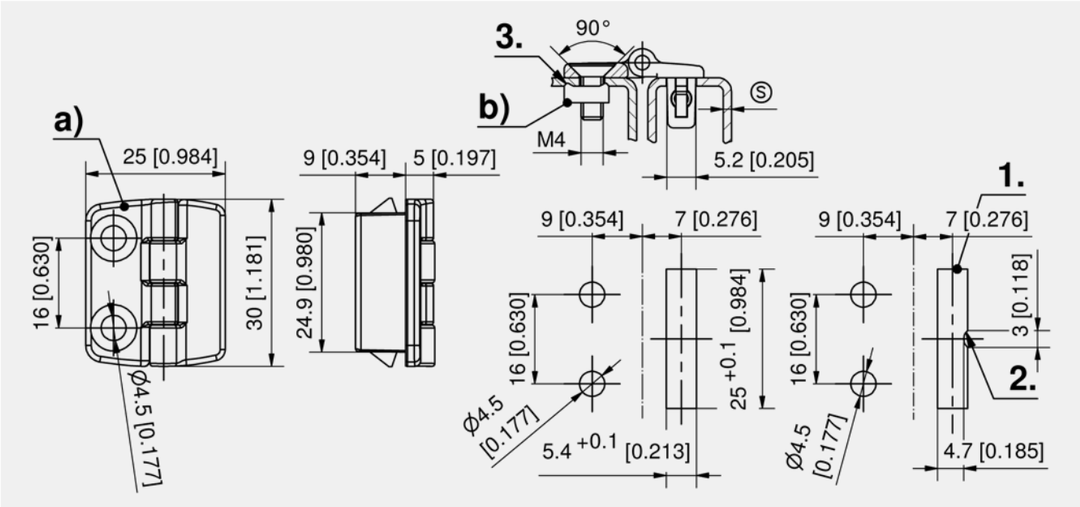

Hinge, zinc die, black

	Part Number	Clamping range (S)	Pin version	Installation type	Delivery Unit
a)	418-9305.33-00008	0.6 - 0.9 mm	pressed in	tool-less / screw-on	10 pcs.
a)	418-9305.33-00010	0.8 - 1.1 mm	pressed in	tool-less / screw-on	10 pcs.
a)	418-9305.33-00014	1.2 - 1.5 mm	pressed in	tool-less / screw-on	10 pcs.
a)	418-9305.33-00020	1.8 - 2.1 mm	pressed in	tool-less / screw-on	10 pcs.
a)	418-9305.33-00024	2.2 - 2.5 mm	pressed in	tool-less / screw-on	10 pcs.

Hinge, zinc die, chrome plated

	Part Number	Clamping range (S)	Pin version	Installation type	Delivery Unit
a)	418-9305.40-00008	0.6 - 0.9 mm	pressed in	tool-less / screw-on	10 pcs.
a)	418-9305.40-00010	0.8 - 1.1 mm	pressed in	tool-less / screw-on	10 pcs.
a)	418-9305.40-00014	1.2 - 1.5 mm	pressed in	tool-less / screw-on	10 pcs.
a)	418-9305.40-00020	1.8 - 2.1 mm	pressed in	tool-less / screw-on	10 pcs.
a)	418-9305.40-00024	2.2 - 2.5 mm	pressed in	tool-less / screw-on	10 pcs.

Accessories

b) 757 218-0907.15-00000 **Nut Plates**
764 292-0306.80-02530 **Tool for uninstallation**

4-249.05DST
◂ all product details on DIRAK.com

Hinge Pr01 180°

[4-247]

Advantages

- Screw-on hinges for aluminum profiles.
- For nested doors.
- Hinge visible.
- RH and LH version.
- 180° Opening angle.
- Lift-off.
- Horizontal and vertial installation with DIRAK tenon blocks or fastening blocks 4-248. A rotation of the hinge is not possible.

Materials

- **Hinge halves:** zinc die, blasted chrome plated or black
- **Pin:** stainless steel

Remarks

(S) in conjunction with tenon blocks of product system 4-248 = max. 3.2mm

Cutout see 4-248

1. installation example for the parallel arrangement of the profiles

2. installation example for the rectangular arrangement of the profiles

3. tenon blocks see 4-248

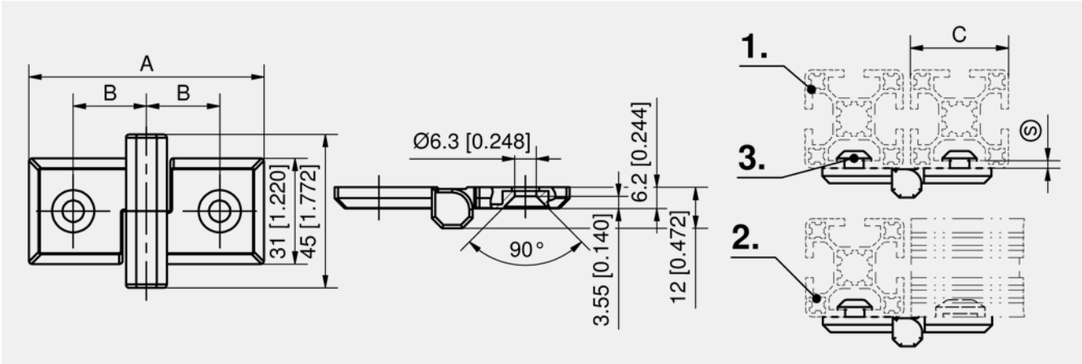

Hinge, zinc die, blasted chrome plated

Part Number	Version	for profile width C	total Length A	Dimension B	Pin version	Installation type	Delivery Unit
265-9001.00-00000	RH	30	59 mm	16.5 mm	pressed in	screw-on	10 pcs.
265-9003.00-00000	LH	30	59 mm	16.5 mm	pressed in	screw-on	10 pcs.
265-9103.00-00000	LH	35	64 mm	19 mm	pressed in	screw-on	10 pcs.
265-9201.00-00000	RH	40	69 mm	21.5 mm	pressed in	screw-on	10 pcs.
265-9401.00-00000	RH	50	79 mm	26.5 mm	pressed in	screw-on	10 pcs.
265-9403.00-00000	LH	50	79 mm	26.5 mm	pressed in	screw-on	10 pcs.

Hinge, zinc die, black

Part Number	Version	for profile width C	total Length A	Dimension B	Pin version	Installation type	Delivery Unit
265-9002.00-00000	RH	30	59 mm	16.5 mm	pressed in	screw-on	10 pcs.
265-9004.00-00000	LH	30	59 mm	16.5 mm	pressed in	screw-on	10 pcs.
265-9202.00-00000	RH	40	69 mm	21.5 mm	pressed in	screw-on	10 pcs.
265-9402.00-00000	RH	50	79 mm	26.5 mm	pressed in	screw-on	10 pcs.
265-9404.00-00000	LH	50	79 mm	26.5 mm	pressed in	screw-on	10 pcs.

Accessories

756 4-248 **Tenon Blocks and Anti-twist Protection**

all product details ▸ on DIRAK.com
4-247

Hinges

Hinge Halves Pr01 180°

[4-247.01]

Advantages

- Hinge halves for aluminum profiles with same or different widths.
- For nested doors.
- Hinge visible.
- RH and LH version.
- 180° Opening angle.
- Lift-off.
- Horizontal and vertial installation with DIRAK tenon blocks or fastening blocks 4-248. A rotation of the hinge is not possible.

Materials

- **Hinge halves:** zinc die, blasted chrome plated or black
- **Pin:** stainless steel

Remarks

Cutout see 4-248

1. recesses at the back of the hinges for the tenon blocks or fastening blocks

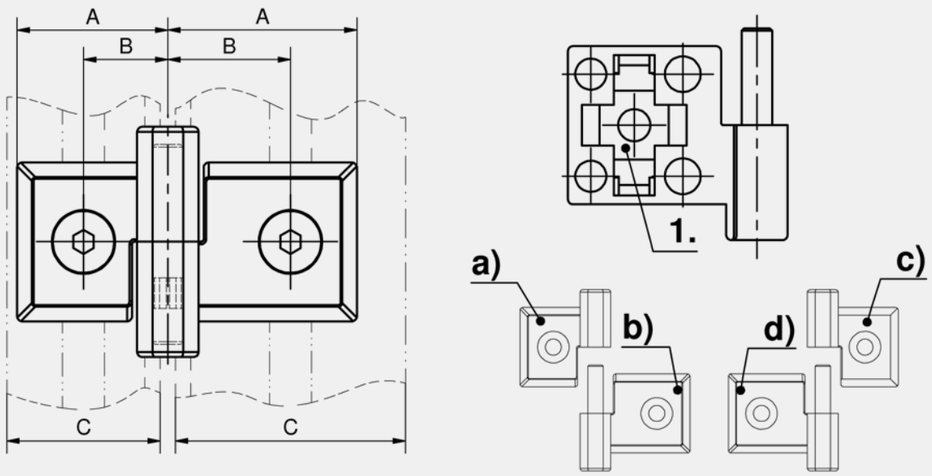

Hinge halves, version RH, zinc die, blasted chrome plated

	Part Number	Pin	Dimension A	Dimension B	for profile width C	Combinable with	Pin version	Installation type	Delivery Unit
a)	265-0101.01-00000		29.5 mm	16.5 mm	30	b	pressed in	screw-on	10 pcs.
a)	265-0201.01-00000		32 mm	19 mm	35	b	pressed in	screw-on	10 pcs.
a)	265-0501.01-00000		39.5 mm	26.5 mm	50	b	pressed in	screw-on	10 pcs.
b)	265-8703.00-00000	Yes	29.5 mm	16.5 mm	30	a	pressed in	screw-on	10 pcs.
b)	265-8707.00-00000	Yes	32 mm	19 mm	35	a	pressed in	screw-on	10 pcs.
b)	265-8719.00-00000	Yes	39.5 mm	26.5 mm	50	a	pressed in	screw-on	10 pcs.

Hinge halves, version RH, zinc die, black

	Part Number	Pin	Dimension A	Dimension B	for profile width C	Combinable with	Pin version	Installation type	Delivery Unit
a)	265-0101.02-00000		29.5 mm	16.5 mm	30	b	pressed in	screw-on	10 pcs.
a)	265-0201.02-00000		32 mm	19 mm	35	b	pressed in	screw-on	10 pcs.
a)	265-0501.02-00000		39.5 mm	26.5 mm	50	b	pressed in	screw-on	10 pcs.
b)	265-8704.00-00000	Yes	29.5 mm	16.5 mm	30	a	pressed in	screw-on	10 pcs.
b)	265-8708.00-00000	Yes	32 mm	19 mm	35	a	pressed in	screw-on	10 pcs.
b)	265-8720.00-00000	Yes	39.5 mm	26.5 mm	50	a	pressed in	screw-on	10 pcs.

Hinge halves, version LH, zinc die, blasted chrome plated

	Part Number	Pin	Dimension A	Dimension B	for profile width C	Combinable with	Pin version	Installation type	Delivery Unit
c)	265-0102.01-00000		29.5 mm	16.5 mm	30	d	pressed in	screw-on	10 pcs.
c)	265-0202.01-00000		32 mm	19 mm	35	d	pressed in	screw-on	10 pcs.
c)	265-0502.01-00000		39.5 mm	26.5 mm	50	d	pressed in	screw-on	10 pcs.
d)	265-8701.00-00000	Yes	29.5 mm	16.5 mm	30	c	pressed in	screw-on	10 pcs.
d)	265-8705.00-00000	Yes	32 mm	19 mm	35	c	pressed in	screw-on	10 pcs.
d)	265-8709.00-00000	Yes	34.5 mm	21.5 mm	40	c	pressed in	screw-on	10 pcs.
d)	265-8717.00-00000	Yes	39.5 mm	26.5 mm	50	c	pressed in	screw-on	10 pcs.

Hinge halves, version LH, zinc die, black

	Part Number	Pin	Dimension A	Dimension B	for profile width C	Combinable with	Pin version	Installation type	Delivery Unit
c)	265-0102.02-00000		29.5 mm	16.5 mm	30	d	pressed in	screw-on	10 pcs.
c)	265-0202.02-00000		32 mm	19 mm	35	d	pressed in	screw-on	10 pcs.
c)	265-0502.02-00000		39.5 mm	26.5 mm	50	d	pressed in	screw-on	10 pcs.
d)	265-8702.00-00000	Yes	29.5 mm	16.5 mm	30	c	pressed in	screw-on	10 pcs.
d)	265-8718.00-00000	Yes	39.5 mm	26.5 mm	50	c	pressed in	screw-on	10 pcs.

	Accessories
756	4-248 **Tenon Blocks and Anti-twist Protection**

4-247.01
all product details on DIRAK.com

DST Hinge 40x40 Pr01 180°

[4-246DST]

Advantages

- Hinge with DIRAK-SNAP-Technology.
- For nested doors.
- Hinge visible.
- RH and LH version.
- 180° Opening angle.
- Lift-off.
- IP65 according to DIN EN 60529.
- Installation tool-less or tool-less / screw-on.

Materials

- **Hinge halves:** zinc die, black
- **Pin and washer:** stainless steel
- **O-rings:** NBR
- **Snap-wedges:** sintered steel, zinc plated

Remarks

1. washer
2. o-ring

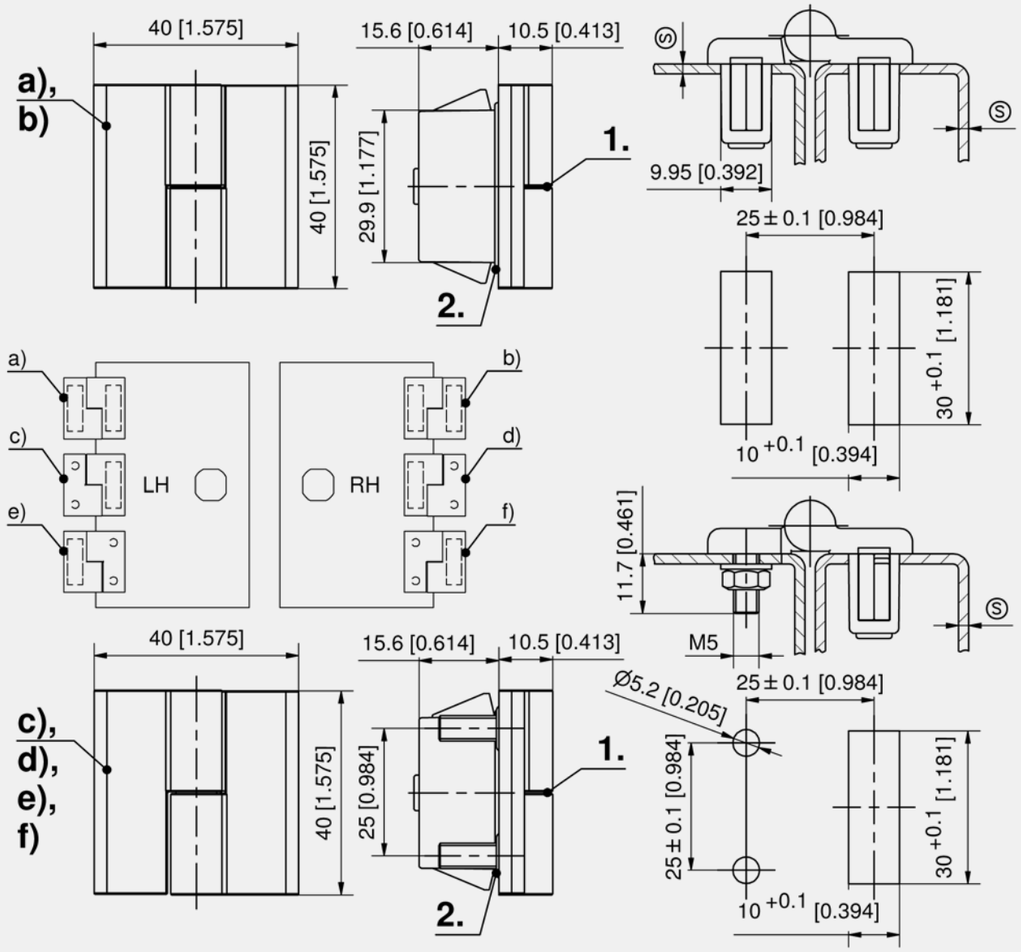

Hinge, version LH

	Part Number	Clamping range (S)	Pin version	Installation type	Delivery Unit
a)	418-9011.00-00010	0.7 - 1.2 mm	pressed in	tool-less	10 pcs.
a)	418-9011.00-00015	1.2 - 1.7 mm	pressed in	tool-less	10 pcs.
a)	418-9011.00-00020	1.7 - 2.2 mm	pressed in	tool-less	10 pcs.
a)	418-9011.00-00025	2.2 - 2.7 mm	pressed in	tool-less	10 pcs.
a)	418-9011.00-00030	2.7 - 3.2 mm	pressed in	tool-less	10 pcs.

Hinge, version RH

	Part Number	Clamping range (S)	Pin version	Installation type	Delivery Unit
b)	418-9008.00-00010	0.7 - 1.2 mm	pressed in	tool-less	10 pcs.
b)	418-9008.00-00015	1.2 - 1.7 mm	pressed in	tool-less	10 pcs.
b)	418-9008.00-00020	1.7 - 2.2 mm	pressed in	tool-less	10 pcs.
b)	418-9008.00-00025	2.2 - 2.7 mm	pressed in	tool-less	10 pcs.
b)	418-9008.00-00030	2.7 - 3.2 mm	pressed in	tool-less	10 pcs.

Hinge, pin pressed into screw-on half, LH

	Part Number	Clamping range (S)	Pin version	Installation type	Delivery Unit
c)	418-9009.00-00010	0.7 - 1.2 mm	pressed in	tool-less / screw-on	10 pcs.
c)	418-9009.00-00015	1.2 - 1.7 mm	pressed in	tool-less / screw-on	10 pcs.
c)	418-9009.00-00020	1.7 - 2.2 mm	pressed in	tool-less / screw-on	10 pcs.
c)	418-9009.00-00025	2.2 - 2.7 mm	pressed in	tool-less / screw-on	10 pcs.
c)	418-9009.00-00030	2.7 - 3.2 mm	pressed in	tool-less / screw-on	10 pcs.

Hinge, pin pressed into screw-on half, RH

	Part Number	Clamping range (S)	Pin version	Installation type	Delivery Unit
d)	418-9006.00-00010	0.7 - 1.2 mm	pressed in	tool-less / screw-on	10 pcs.
d)	418-9006.00-00015	1.2 - 1.7 mm	pressed in	tool-less / screw-on	10 pcs.
d)	418-9006.00-00020	1.7 - 2.2 mm	pressed in	tool-less / screw-on	10 pcs.
d)	418-9006.00-00025	2.2 - 2.7 mm	pressed in	tool-less / screw-on	10 pcs.
d)	418-9006.00-00030	2.7 - 3.2 mm	pressed in	tool-less / screw-on	10 pcs.

Hinge, pin pressed into DST-half, LH

	Part Number	Clamping range (S)	Pin version	Installation type	Delivery Unit
e)	418-9012.00-00010	0.7 - 1.2 mm	pressed in	tool-less / screw-on	10 pcs.
e)	418-9012.00-00015	1.2 - 1.7 mm	pressed in	tool-less / screw-on	10 pcs.
e)	418-9012.00-00020	1.7 - 2.2 mm	pressed in	tool-less / screw-on	10 pcs.
e)	418-9012.00-00025	2.2 - 2.7 mm	pressed in	tool-less / screw-on	10 pcs.
e)	418-9012.00-00030	2.7 - 3.2 mm	pressed in	tool-less / screw-on	10 pcs.

Hinge, pin pressed into DST-half, RH

	Part Number	Clamping range (S)	Pin version	Installation type	Delivery Unit
f)	418-9013.00-00010	0.7 - 1.2 mm	pressed in	tool-less / screw-on	10 pcs.
f)	418-9013.00-00015	1.2 - 1.7 mm	pressed in	tool-less / screw-on	10 pcs.
f)	418-9013.00-00020	1.7 - 2.2 mm	pressed in	tool-less / screw-on	10 pcs.
f)	418-9013.00-00025	2.2 - 2.7 mm	pressed in	tool-less / screw-on	10 pcs.
f)	418-9013.00-00030	2.7 - 3.2 mm	pressed in	tool-less / screw-on	10 pcs.

	Accessories
764	292-0306.80-02530 **Tool for uninstallation**
762	292-0401.00-03010 **Cutout-cover**
763	292-0702.15-01030 **Reinforcement plate for cutout**

4-246DST

all product details on DIRAK.com

Hinge 40x40 Pr01 180°

[4-246]

Advantages

- Screw-on hinge 40x40mm with molded in countersunk screws M5.
- For nested doors.
- Hinge visible.
- RH and LH version.
- 180° Opening angle.
- Lift-off.
- IP65 according to DIN EN 60529.

Materials

- **Hinge halves:** zinc die, black
- **Pin and washer:** stainless steel
- **O-ring:** NBR

Remarks

1. washer
2. o-ring

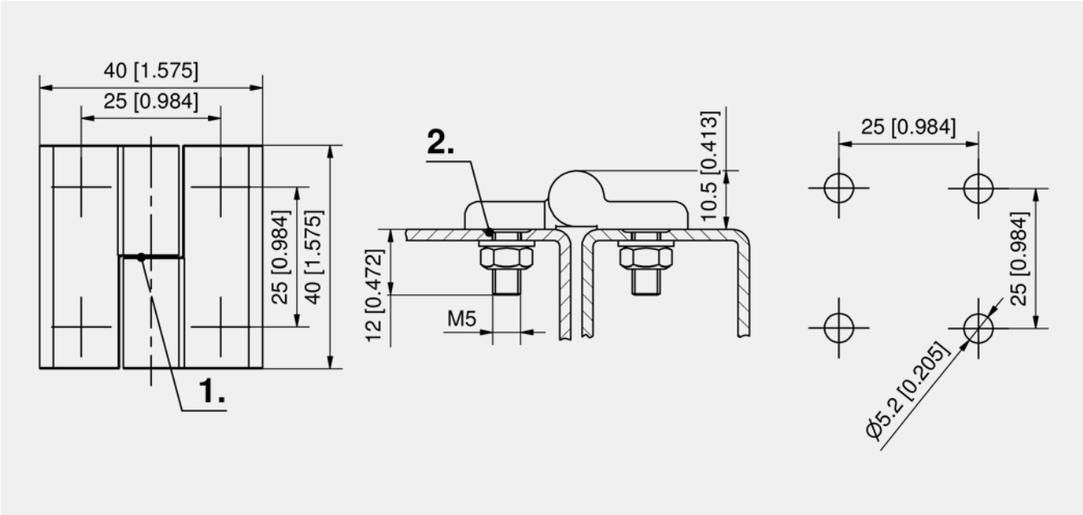

Hinge

Part Number	Version	Pin version	Installation type	Delivery Unit
218-9010.00-00000	RH version	pressed in	screw-on	10 pcs.
218-9011.00-00000	LH version	pressed in	screw-on	10 pcs.

all product details on DIRAK.com
4-246

Hinge 40x40 Pr01 180°

[4-250]

Advantages

- Screw-on hinge with or without grounding.
- For nested doors.
- Hinge visible.
- RH / LH application.
- 180° Opening angle.

Materials

- **Hinge halves:** zinc die, blasted chrome plated or black
- **Pin:** stainless steel
- **Molded in screws ang grounding washer:** steel, zinc plated
- **Spring:** spring steel

Remarks

*Grounding version c): limited current carrying capacity, 4 grounding discs required (not included in the scope of delivery).

Combination of versions a) and b) on request.

1. contact spring

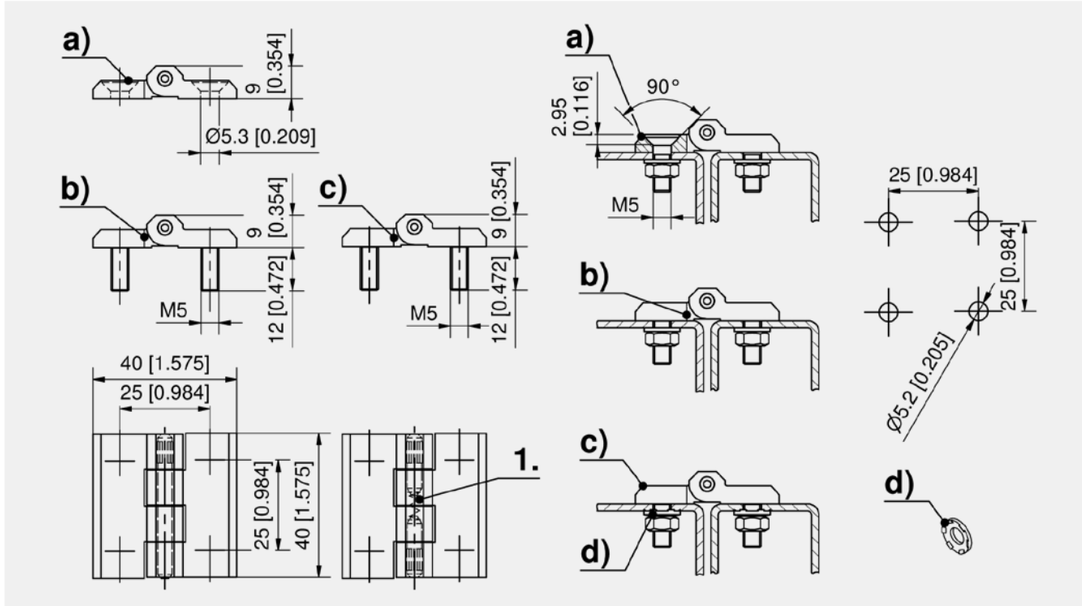

Hinge, zinc die

	Part Number	Version	Surface	Material pin	Grounding type	Pin version	Installation type	Delivery Unit
a)	218-9003.00-00000	with countersunk holes for M5	blasted chrome plated	stainless steel		pressed in	screw-on	10 pcs.
a)	218-9004.00-00000	with countersunk holes for M5	black	stainless steel		pressed in	screw-on	10 pcs.
b)	218-9001.00-00000	with molded in countersunk screws M5	blasted chrome plated	stainless steel		pressed in	screw-on	10 pcs.
b)	218-9002.00-00000	with molded in countersunk screws M5	black	stainless steel		pressed in	screw-on	10 pcs.
c)	218-9402.00-00000	with molded in countersunk screws M5	black	steel, zinc plated	Grounding washer	pressed in	screw-on	10 pcs.

	Accessories
d)	861-0176.07-00005 **Grounding washer**

all product details on DIRAK.com
4-250

DST Hinge 40x40 Pr01 180°

[4-250DST]

Advantages

- Hinge with DIRAK-SNAP-Technology.
- For nested doors.
- Hinge visible.
- RH / LH application.
- 180° Opening angle.
- Installation tool-less or tool-less / screw-on.

Materials

- **Hinge halves:** zinc die, black
- **Pin:** stainless steel
- **Snap wedges:** sintered steel, zinc plated

Remarks

Other data and dimensions see product system 4-250.

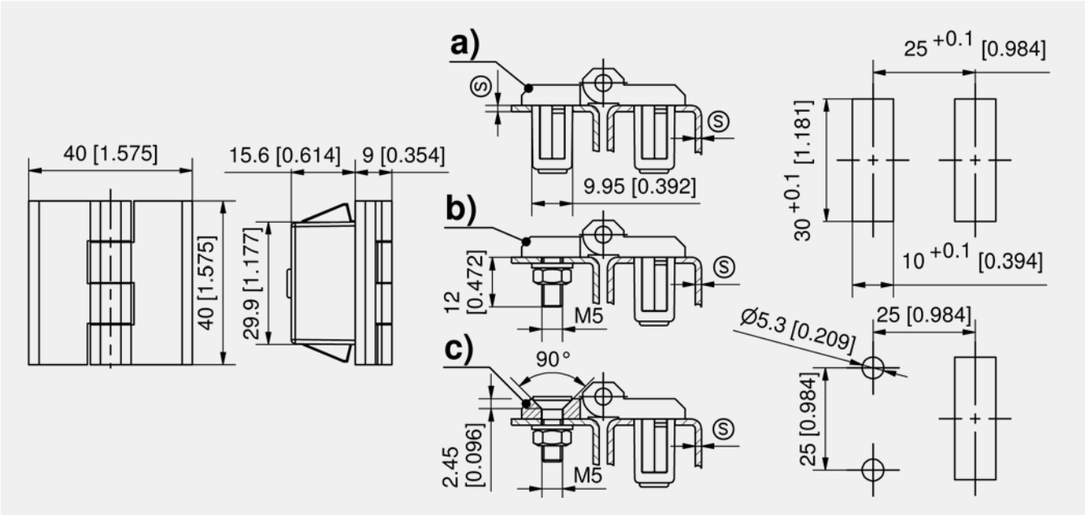

Hinge

	Part Number	Version	Clamping range (S)	Pin version	Installation type	Delivery Unit
a)	418-9001.00-00015	clip-in	1.2 - 1.7 mm	pressed in	tool-less	10 pcs.
a)	418-9001.00-00020	clip-in	1.7 - 2.2 mm	pressed in	tool-less	10 pcs.
a)	418-9001.00-00025	clip-in	2.2 - 2.7 mm	pressed in	tool-less	10 pcs.
a)	418-9001.00-00030	clip-in	2.7 - 3.2 mm	pressed in	tool-less	10 pcs.
b)	418-9002.00-00015	with molded in countersunk screws M5	1.2 - 1.7 mm	pressed in	tool-less / screw-on	10 pcs.
b)	418-9002.00-00020	with molded in countersunk screws M5	1.7 - 2.2 mm	pressed in	tool-less / screw-on	10 pcs.
b)	418-9002.00-00025	with molded in countersunk screws M5	2.2 - 2.7 mm	pressed in	tool-less / screw-on	10 pcs.
b)	418-9002.00-00030	with molded in countersunk screws M5	2.7 - 3.2 mm	pressed in	tool-less / screw-on	10 pcs.
c)	418-9003.00-00015	with countersunk holes for M5	1.2 - 1.7 mm	pressed in	tool-less / screw-on	10 pcs.
c)	418-9003.00-00020	with countersunk holes for M5	1.7 - 2.2 mm	pressed in	tool-less / screw-on	10 pcs.
c)	418-9003.00-00025	with countersunk holes for M5	2.2 - 2.7 mm	pressed in	tool-less / screw-on	10 pcs.
c)	418-9003.00-00030	with countersunk holes for M5	2.7 - 3.2 mm	pressed in	tool-less / screw-on	10 pcs.

	Accessories
764	292-0306.80-02530 **Tool for uninstallation**
762	292-0401.00-03010 **Cutout-cover**
763	292-0702.15-01030 **Reinforcement plate for cutout**

4-250DST
◂ all product details on DIRAK.com

Hinge Pr01 180° Stainless Steel

[7-206]

Advantages

- For nested doors.
- Hinge visible.
- RH and LH version.
- 180° Openening angle.
- Lift-off.
- Vandal-proof by fastening from the inside with screws M6.
- Spacer for door thicknesses of 1.5mm and 2mm.
- Insensitivity against dirt due to bevelled edges.

Materials

- **Hinge halves, pin and spacer:** AISI 316
- **Washer:** AISI 303

Remarks

1. spacer

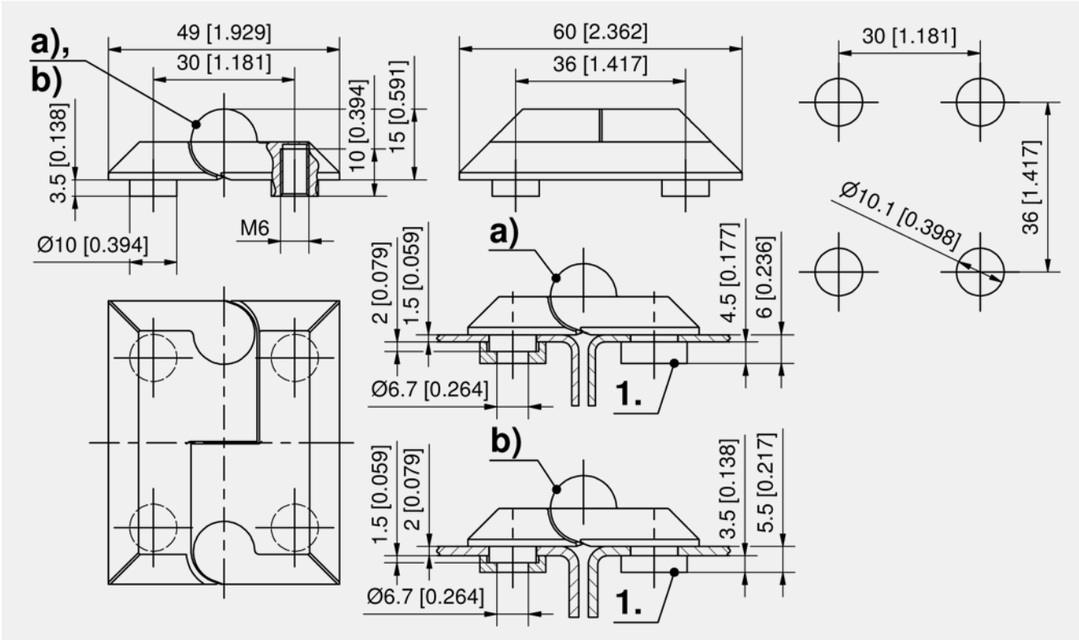

Hinge

	Part Number	Version	Door-thickness (S)	Pin version	Installation type	Delivery Unit
a)	218-9012.00-00015	RH	1.5 mm	loose	screw-on	10 pcs.
b)	218-9012.00-00020	RH	2 mm	loose	screw-on	10 pcs.
a)	218-9013.00-00015	LH	1.5 mm	loose	screw-on	10 pcs.
b)	218-9013.00-00020	LH	2 mm	loose	screw-on	10 pcs.

all product details ▸ on DIRAK.com
7-206

Hinge 50x50 Pr01 125° Stainless Steel

[7-205]

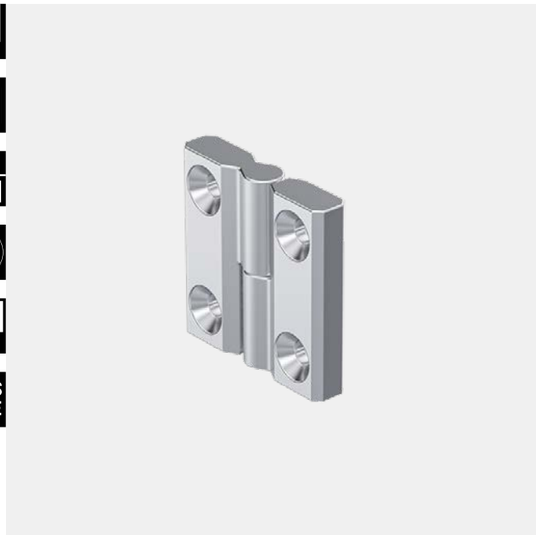

Advantages

- For nested doors.
- Hinge visible.
- 125° Opening angle.
- Lift-off.
- The double symmetrical layout allows RH and LH application.

Materials

- **Hinge-parts and pin:** AISI 316

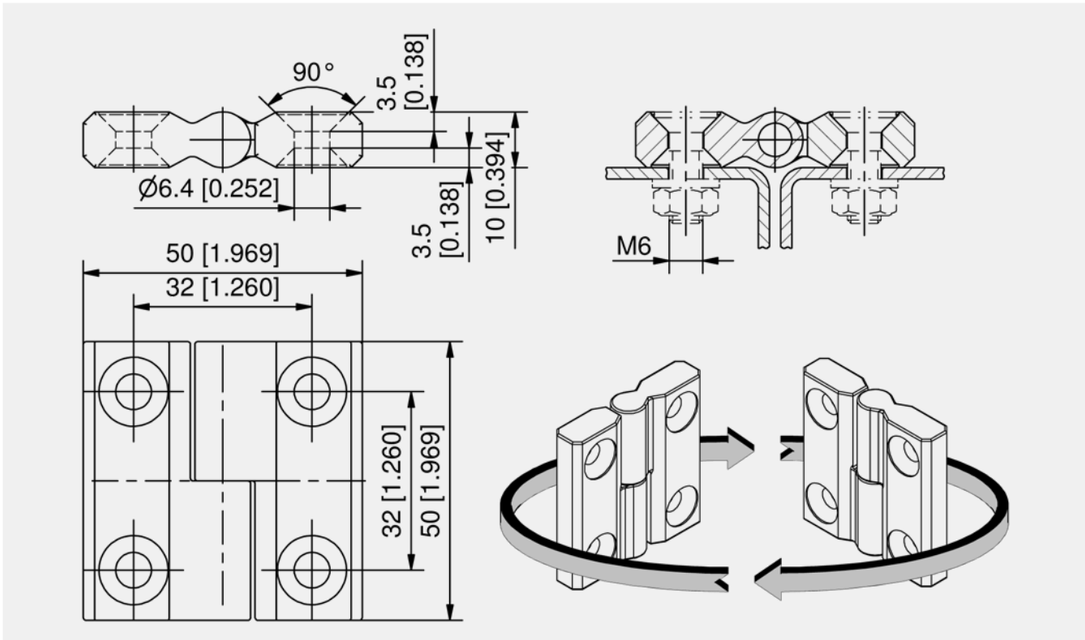

Hinge

Part Number	Width W	Height H	Pin version	Installation type	Delivery Unit
218-9119.00-00000	50 mm	50 mm	pressed in	screw-on	10 pcs.

7-205

◂ all product details on DIRAK.com

Hinge 50x50 Pr01 180°

[4-260]

Advantages

- Screw-on hinge with or without grounding.
- For nested doors.
- Hinge visible.
- RH / LH application.
- 180° Opening angle.

Materials

- **Hinge halves:** zinc die, blasted chrome plated or black
- **Pin:** stainless steel or steel, zinc plated
- **Molded in screws and grounding washer:** steel, zinc plated
- **Spring:** spring steel

Remarks

*Grounding version c): limited current carrying capacity, 4 grounding washers required (not included in the scope of delivery).

1. contact spring

Combination of versions a) and b) on request.

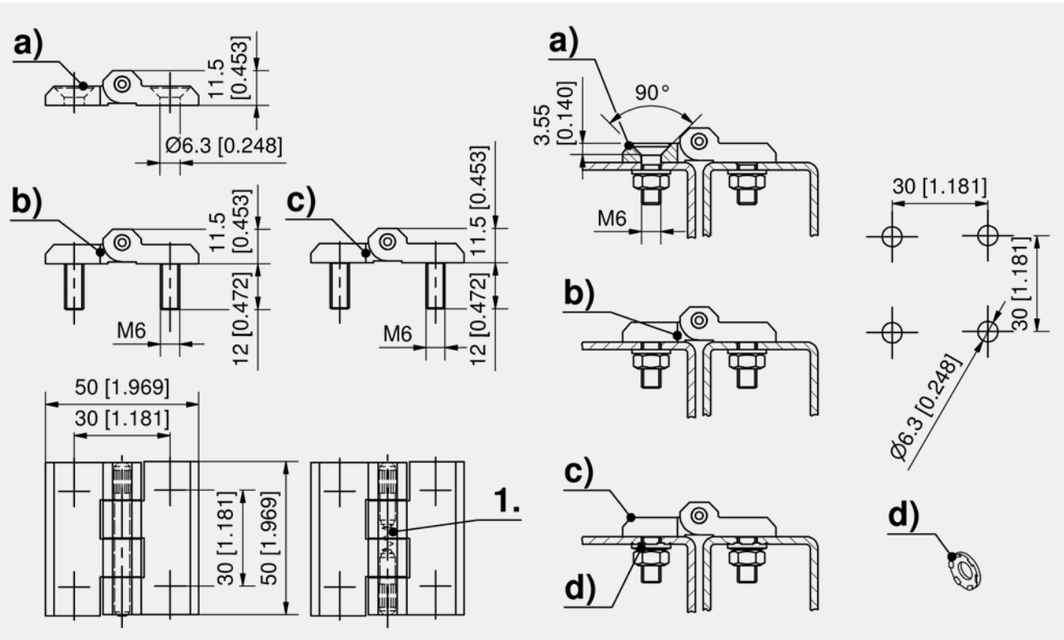

Hinge, zinc die

	Part Number	Version	Surface	Material pin	Grounding type	Pin version	Installation type	Delivery Unit
a)	218-9103.00-00000	with countersunk holes for M6	blasted chrome plated	stainless steel		pressed in	screw-on	10 pcs.
a)	218-9104.00-00000	with countersunk holes for M6	black	stainless steel		pressed in	screw-on	10 pcs.
b)	218-9101.00-00000	with molded in screws M6	blasted chrome plated	stainless steel		pressed in	screw-on	10 pcs.
b)	218-9102.00-00000	with molded in screws M6	black	stainless steel		pressed in	screw-on	10 pcs.
c)	218-9412.00-00000	with molded in screws M6	black	steel, zinc plated	Grounding washer	pressed in	screw-on	10 pcs.

	Accessories
d)	800-0411.00-00000 **Grounding washer**

all product details ▸ on DIRAK.com

4-260

DST Hinge 50x50 Pr01 180° [4-260DST]

Advantages

- Hinge with DIRAK-SNAP-Technology.
- For nested doors.
- Hinge visible.
- RH / LH application.
- 180° Opening angle.
- Installation tool-less or tool-less / screw-on.
- Seismic-proof according to GR-63-CORE, Issue 4.

Materials

- **Hinge halves:** zinc die, black
- **Pin:** stainless steel
- **Pin molded in:** steel, zinc plated
- **Snap wedges:** sintered metal, coated

Remarks

Other data and dimensions see product system 4-260.

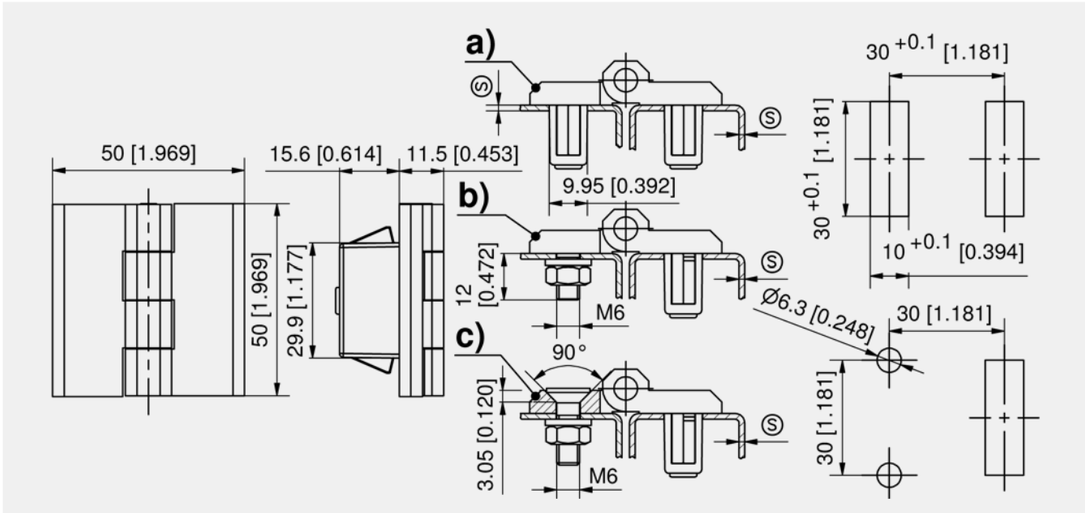

Hinge

	Part Number	Version	Clamping range (S)	Pin version	Installation type	Delivery Unit
a)	418-9101.00-00015	clip-in	1.2 - 1.7 mm	pressed in	tool-less	10 pcs.
a)	418-9101.00-00020	clip-in	1.7 - 2.2 mm	pressed in	tool-less	10 pcs.
a)	418-9101.00-00025	clip-in	2.2 - 2.7 mm	pressed in	tool-less	10 pcs.
a)	418-9101.00-00030	clip-in	2.7 - 3.2 mm	pressed in	tool-less	10 pcs.
b)	418-9104.00-00015	with molded in screws M6	1.2 - 1.7 mm	pressed in	tool-less / screw-on	10 pcs.
b)	418-9104.00-00020	with molded in screws M6	1.7 - 2.2 mm	pressed in	tool-less / screw-on	10 pcs.
b)	418-9104.00-00025	with molded in screws M6	2.2 - 2.7 mm	pressed in	tool-less / screw-on	10 pcs.
b)	418-9104.00-00030	with molded in screws M6	2.7 - 3.2 mm	pressed in	tool-less / screw-on	10 pcs.
c)	418-9106.00-00015	with countersunk holes for M6	1.2 - 1.7 mm	pressed in	tool-less / screw-on	10 pcs.
c)	418-9106.00-00020	with countersunk holes for M6	1.7 - 2.2 mm	pressed in	tool-less / screw-on	10 pcs.
c)	418-9106.00-00025	with countersunk holes for M6	2.2 - 2.7 mm	pressed in	tool-less / screw-on	10 pcs.
c)	418-9106.00-00030	with countersunk holes for M6	2.7 - 3.2 mm	pressed in	tool-less / screw-on	10 pcs.

+	Accessories
764	292-0306.80-02530 **Tool for uninstallation**
762	292-0401.00-03010 **Cutout-cover**
763	292-0702.15-01030 **Reinforcement plate for cutout**

4-260DST

all product details on DIRAK.com

Hinge 50x50 Pr01 180° with Grounding Countersunk Screw [4-260.01]

Advantages

- Grounding countersunk screw according to DIN 7500.
- According to DIN EN 61439-1 (VDE 0660-600-1):2012-06, EN 61439-1:2011.
- For nested doors.
- Hinge visible.
- RH / LH application.
- 180° Opening angle.

Materials

- **Hinge halves:** zinc die, blasted chrome plated or black
- **Pins:** AISI 303
- **Spring:** spring steel
- **Countersunk screw:** steel, zinc plated

Remarks

Other dimensions see produkt system 4-260.

(1.) Information about the grounding countersunk screw see product system 6-044.

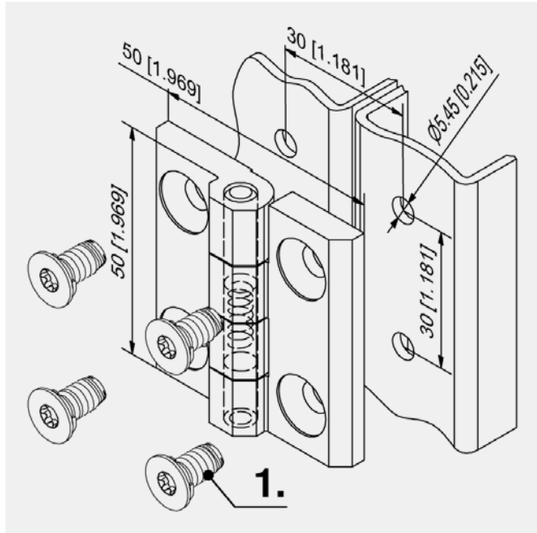

Hinge with grounding countersunk screw M6

Part Number	Version	Surface	Pin version	Installation type	Delivery Unit
218-9103.00-00002	with countersunk holes for M6	blasted chrome plated	pressed in	screw-on	10 pcs.
218-9104.00-00002	with countersunk holes for M6	black	pressed in	screw-on	10 pcs.

Hinge 76x50 Pr01 180° with Grounding Countersunk Screw [4-262.01]

Advantages

- Grounding countersunk screw according to DIN 7500.
- According to DIN EN 61439-1 (VDE 0660-600-1):2012-06, EN 61439-1:2011.
- For nested doors.
- Hinge visible.
- RH / LH application.
- 180° Opening angle.

Materials

- **Hinge halves:** zinc die, blasted chrome plated or black
- **Pins:** AISI 303
- **Spring:** spring steel
- **Countersunk screw:** steel, zinc plated

Remarks

Other dimensions see produkt system 4-262.

(1.) Information about the grounding countersunk screw see product system 6-044.

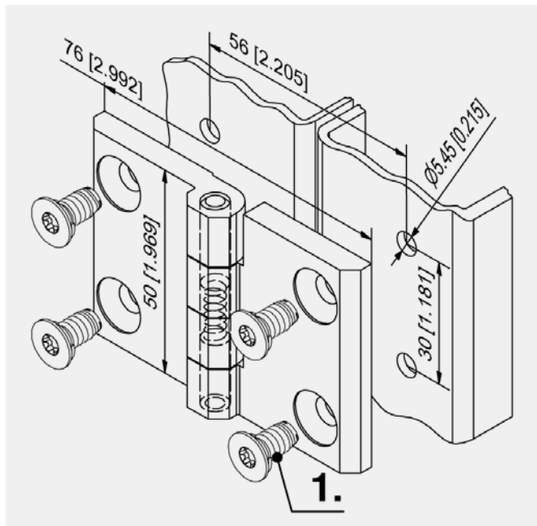

Hinge with grounding countersunk screw M6

Part Number	Version	Surface	Pin version	Installation type	Delivery Unit
218-9107.00-00002	with countersunk holes for M6	blasted chrome plated	pressed in	screw-on	10 pcs.
218-9108.00-00002	with countersunk holes for M6	black	pressed in	screw-on	10 pcs.

all product details on DIRAK.com

4-260.01

4-262.01

Hinge 63x50 Pr01 180° with Grounding Countersunk Screw [4-264.01]

Advantages

- Grounding countersunk screw according to DIN 7500.
- According to DIN EN 61439-1 (VDE 0660-600-1):2012-06, EN 61439-1:2011.
- For nested doors.
- Hinge visible.
- RH / LH application.
- 180° Opening angle.

Materials

- **Hinge halves:** zinc die, blasted chrome plated or black
- **Pins:** AISI 303
- **Spring:** spring steel
- **Countersunk screw:** steel, zinc plated

Remarks

Other dimensions see produkt system 4-264.

(1.) Information about the grounding countersunk screw see product system 6-044.

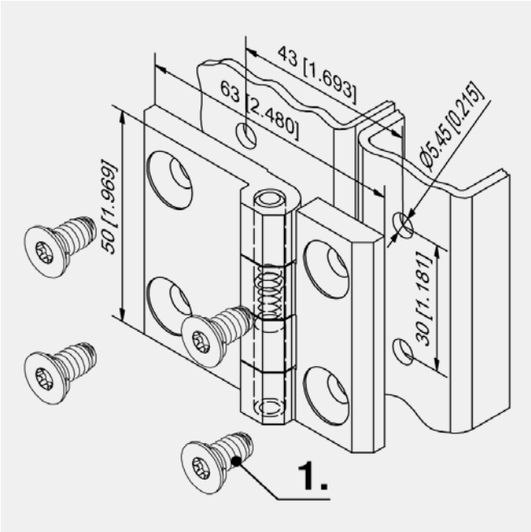

Hinge with grounding countersunk screw M6

Part Number	Version	Surface	Pin version	Installation type	Delivery Unit
218-9109.00-00002	with countersunk holes for M6	blasted chrome plated	pressed in	screw-on	10 pcs.
218-9110.00-00002	with countersunk holes for M6	black	pressed in	screw-on	10 pcs.

Hinge 76x60 Pr01 180° with Grounding Countersunk Screw [4-272.01]

Advantages

- Grounding countersunk screw according to DIN 7500.
- According to DIN EN 61439-1 (VDE 0660-600-1):2012-06, EN 61439-1:2011.
- For nested doors.
- Hinge visible.
- RH / LH application.
- 180° Opening angle.

Materials

- **Hinge halves:** zinc die, blasted chrome plated or black
- **Pins:** AISI 303
- **Spring:** spring steel
- **Countersunk screw:** steel, zinc plated

Remarks

Other dimensions see produkt system 4-272.

(1.) Information about the grounding countersunk screw see product system 6-044.

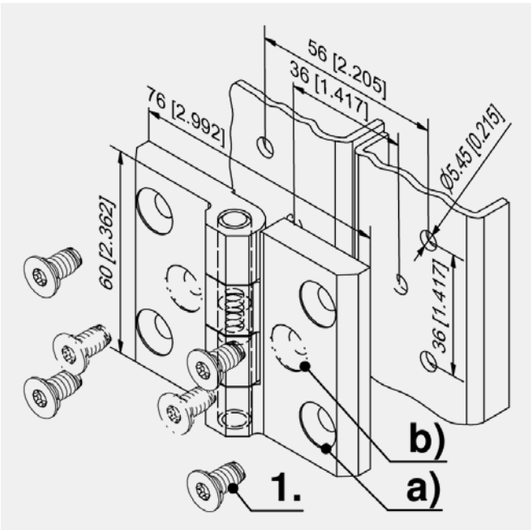

Hinge with grounding countersunk screw M6

	Part Number	Version	Surface	Pin version	Installation type	Delivery Unit
a)	218-9205.00-00002	with 4 countersunk holes for M6	blasted chrome plated	pressed in	screw-on	10 pcs.
a)	218-9206.00-00002	with 4 countersunk holes for M6	black	pressed in	screw-on	10 pcs.
b)	218-9207.00-00002	with 6 countersunk holes for M6	blasted chrome plated	pressed in	screw-on	10 pcs.
b)	218-9208.00-00002	with 6 countersunk holes for M6	black	pressed in	screw-on	10 pcs.

4-264.01 4-272.01 ◂ all product details on DIRAK.com

Hinge 76x50 Pr01 270° [4-262]

Advantages

- Screw-on hinge.
- For nested doors.
- Hinge visible.
- RH / LH application.
- 270° Opening angle.
- Version b) allows application around corner.

Materials

- **Hinge halves:** zinc die, blasted chrome plated or black
- **Pin:** stainless steel
- **Molded in screws:** steel, zinc plated

Remarks

Combination of versions a) and b) on request.

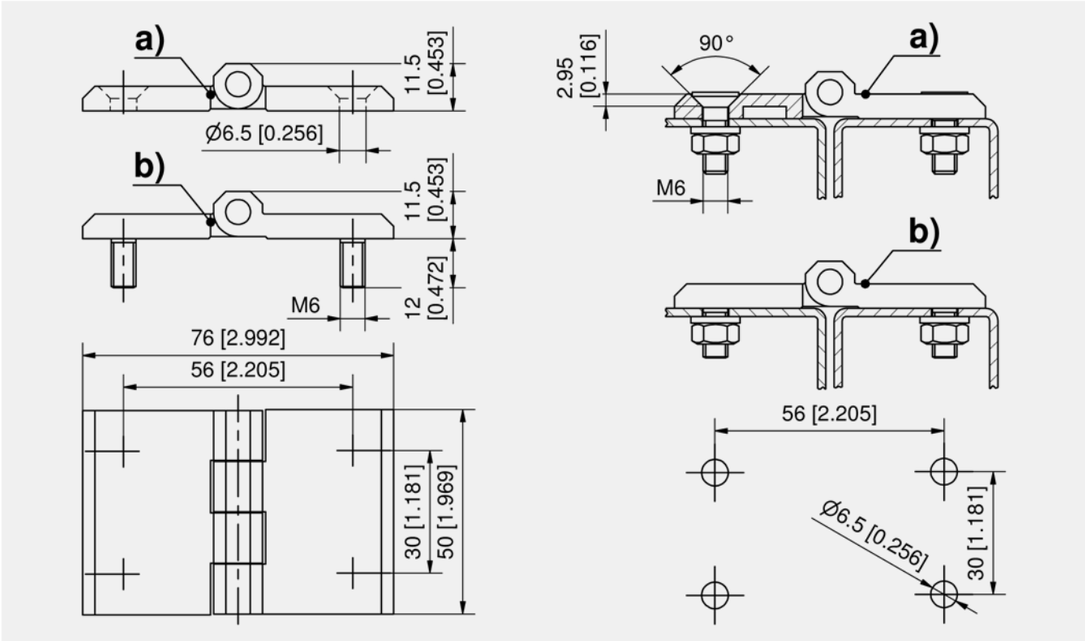

Hinge, zinc die

	Part Number	Version	Surface	Pin version	Installation type	Delivery Unit
a)	218-9107.00-00000	with countersunk holes for M6	blasted chrome plated	pressed in	screw-on	10 pcs.
a)	218-9108.00-00000	with countersunk holes for M6	black	pressed in	screw-on	10 pcs.
b)	218-9105.00-00000	with molded in screws M6	blasted chrome plated	pressed in	screw-on	10 pcs.
b)	218-9106.00-00000	with molded in screws M6	black	pressed in	screw-on	10 pcs.

all product details ▸ on DIRAK.com 4-262

Hinge 63x50 Pr01 270°

[4-264]

Advantages

- Screw-on hinge.
- For nested doors.
- Hinge visible
- RH / LH application.
- 270° Opening angle.

Materials

- **Hinge halves:** zinc die, blasted chrome plated or black
- **Pin:** stainless steel
- **Molded in screws:** steel, zinc plated

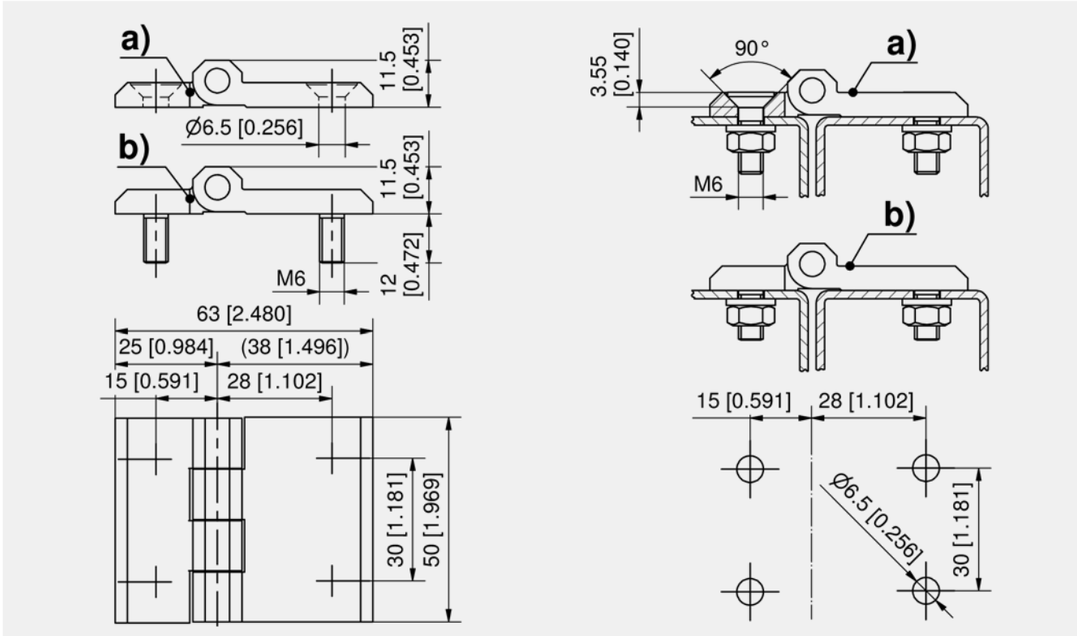

Hinge, zinc die

	Part Number	Version	Surface	Pin version	Installation type	Delivery Unit
a)	218-9109.00-00000	with countersunk holes for M6	blasted chrome plated	pressed in	screw-on	10 pcs.
a)	218-9110.00-00000	with countersunk holes for M6	black	pressed in	screw-on	10 pcs.
b)	218-9124.00-00000	with molded in screws M6	blasted chrome plated	pressed in	screw-on	10 pcs.
b)	218-9125.00-00000	with molded in screws M6	black	pressed in	screw-on	10 pcs.

4-264

all product details on DIRAK.com

DST Hinge 63x50 Pr01 180°

[4-264DST]

Advantages

- Hinge with DIRAK-SNAP-Technology.
- For nested doors.
- Hinge visible.
- RH / LH application.
- 180° Opening angle.
- Combination: the short hinge half with DST, the long hinge half with molded in counter-sunk screws or with counter-sunk holes.

Materials

- **Hinge-parts:** zinc die, black
- **Pin:** stainless steel
- **Snap wedges:** sintered steel, zinc plated

Remarks

Allows for corner applications.

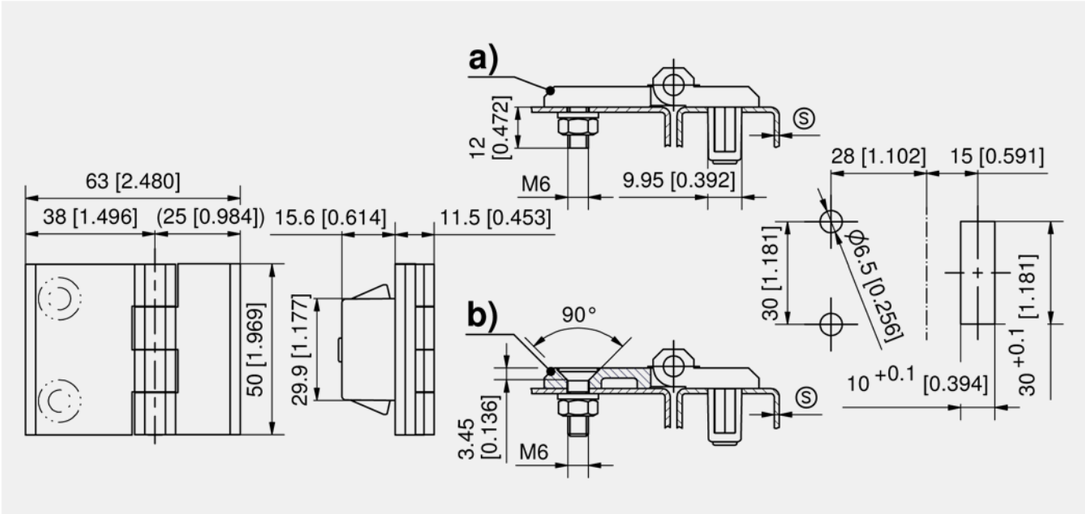

Hinge

	Part Number	Clamping range (S)	Version	Pin version	Installation type	Delivery Unit
a)	418-9103.00-00015	1.2 - 1.7 mm	with molded in screws M6	pressed in	tool-less / screw-on	10 pcs.
a)	418-9103.00-00020	1.7 - 2.2 mm	with molded in screws M6	pressed in	tool-less / screw-on	10 pcs.
a)	418-9103.00-00025	2.2 - 2.7 mm	with molded in screws M6	pressed in	tool-less / screw-on	10 pcs.
a)	418-9103.00-00030	2.7 - 3.2 mm	with molded in screws M6	pressed in	tool-less / screw-on	10 pcs.
b)	418-9102.00-00015	1.2 - 1.7 mm	with countersunk holes for M6	pressed in	tool-less / screw-on	10 pcs.
b)	418-9102.00-00020	1.7 - 2.2 mm	with countersunk holes for M6	pressed in	tool-less / screw-on	10 pcs.
b)	418-9102.00-00025	2.2 - 2.7 mm	with countersunk holes for M6	pressed in	tool-less / screw-on	10 pcs.
b)	418-9102.00-00030	2.7 - 3.2 mm	with countersunk holes for M6	pressed in	tool-less / screw-on	10 pcs.

	Accessories
764	292-0306.80-02530 **Tool for uninstallation**
762	292-0401.00-03010 **Cutout-cover**
763	292-0702.15-01030 **Reinforcement plate for cutout**

all product details on DIRAK.com

4-264DST

Hinge PA, 60x40 Pr01 180°

[4-400]

Advantages

- For nested doors.
- Hinge visible.
- Captive pin protected against loosening and falling out.
- RH / LH application.
- 180° Opening angle.
- Tight tolerance in knuckles ensures proper alignment.
- 6-part knuckle pin assembly.
- Lightweight.
- Corrosion resistant.
- Rounded edges.

Materials

- **Hinge:** PA6, black **UL 94 V0 halogen free**

Remarks

1. fastening by countersunk screws M6 x 16

according to DIN 7991 or DIN ISO 10642 and DIN 965 or DIN ISO 7046.

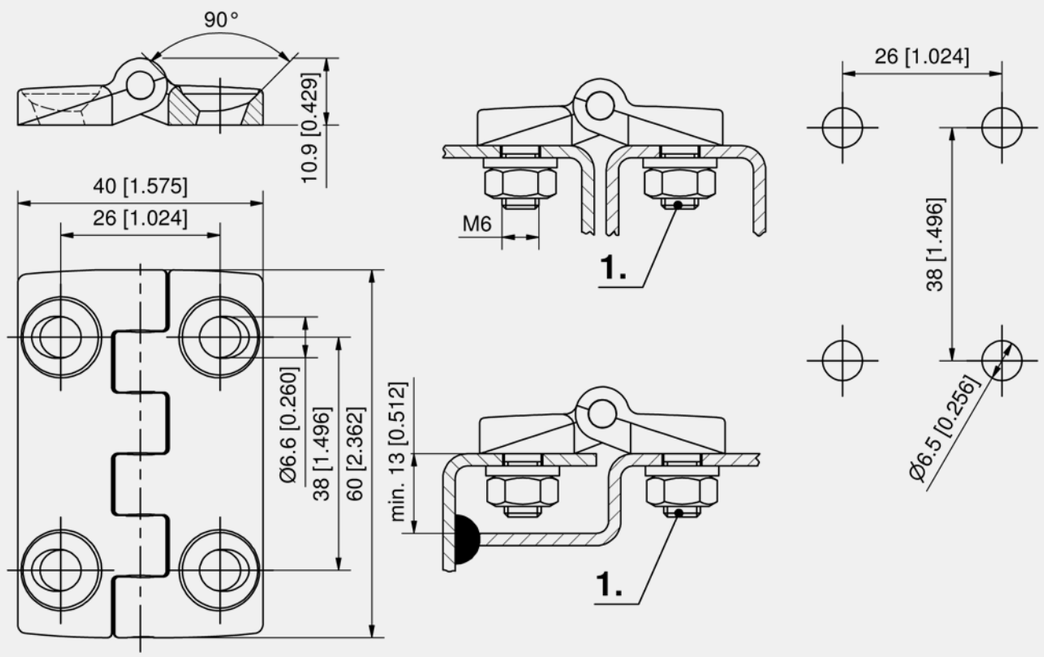

Hinge

Part Number	Width W	Height H	Pin version	Installation type	Delivery Unit
218-9220.00-00000	40 mm	60 mm	cast-on	screw-on	100 pcs.

4-400
◂ all product details on DIRAK.com

Hinge PA, 60x60 Pr01 180°

[4-401]

Advantages

- For nested doors.
- Hinge visible.
- RH/LH application.
- 180° Opening angle.
- Low weight.
- Corrosion resistant.

Materials

- **Hinge:** PA, black
- **Pin:** stainless steel

Remarks

1. fastening with countersunk screw M8 DIN 7991 or DIN ISO 10642 and DIN 965 or DIN ISO 7046

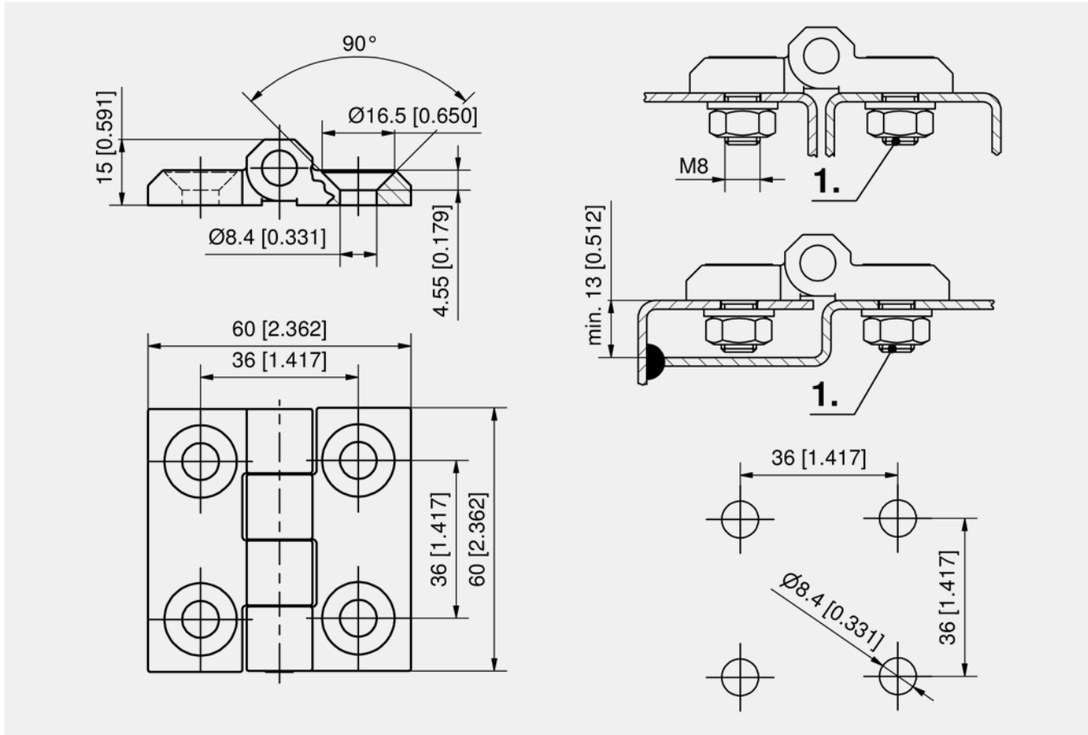

Hinge

Part Number	Width W	Height H	Pin version	Installation type	Delivery Unit
218-9241.00-00000	60 mm	60 mm	pressed in	screw-on	10 pcs.

all product details ▸ on DIRAK.com
4-401

Hinges

Hinge 60x60 Pr01 180°

[4-270]

Advantages

- Screw-on hinge with or without grounding.
- For nested doors.
- Hinge visible.
- RH / LH application.
- 180° Opening angle.

Materials

- **Hinge halves:** zinc die, blasted chrome plated or black
- **Pin:** stainless steel or steel, zinc plated
- **Molded in screws and grounding washer:** steel, zinc plated
- **Spring:** spring steel

Remarks

*Grounding version c): limited current carrying capacity, 4 grounding washers required (not included in the scope of delivery).

Combination of versions a) and b) on request.

1. contact spring

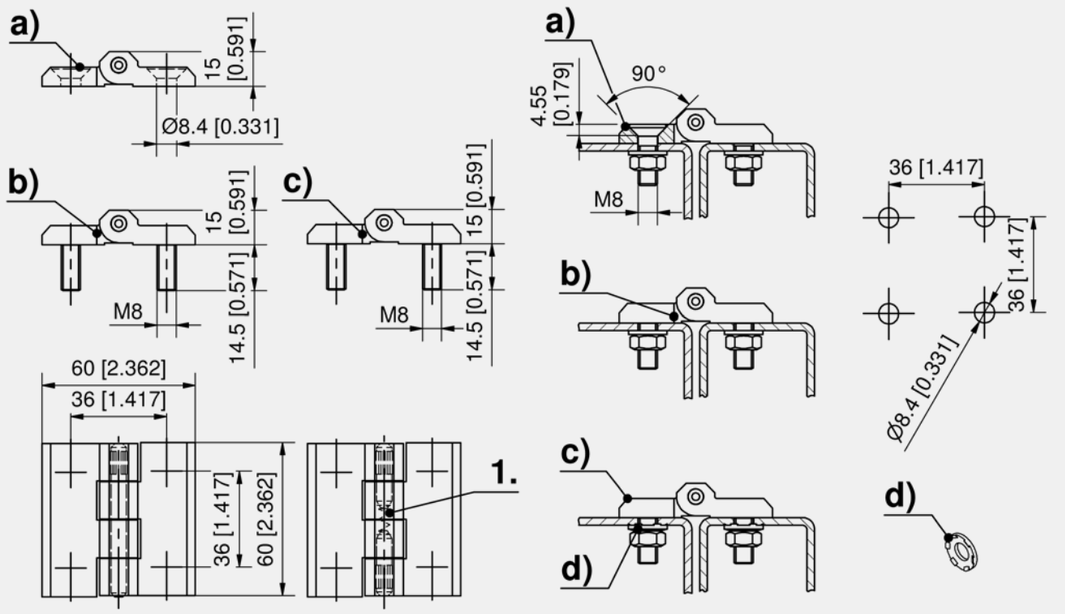

Hinge, zinc die

	Part Number	Version	Surface	Material pin	Pin version	Installation type	Delivery Unit
a)	218-9203.00-00000	with countersunk holes for M8	blasted chrome plated	stainless steel	pressed in	screw-on	10 pcs.
a)	218-9204.00-00000	with countersunk holes for M8	black	stainless steel	pressed in	screw-on	10 pcs.
b)	218-9201.00-00000	Screws M8 molded in	blasted chrome plated	stainless steel	pressed in	screw-on	10 pcs.
b)	218-9202.00-00000	Screws M8 molded in	black	stainless steel	pressed in	screw-on	10 pcs.
c)	218-9422.00-00000	Screws M8 molded in	black	steel, zinc plated	pressed in	screw-on	10 pcs.

*	Function extension
d)	861-0146.07-00008 **Grounding washer**

4-270

◂ all product details on DIRAK.com

DST Hinge 60x60 Pr01 180°

[4-270DST]

Advantages

- Hinge with DIRAK-SNAP-Technology.
- For nested doors.
- Hinge visible.
- RH / LH application.
- 180° Opening angle.
- Installation tool-less or tool-less / screw-on.

Materials

- **Hinge halves:** zinc die, black
- **Pin:** stainless steel
- **Pin molded in:** steel, zinc plated
- **Snap wedges:** sintered metal, coated

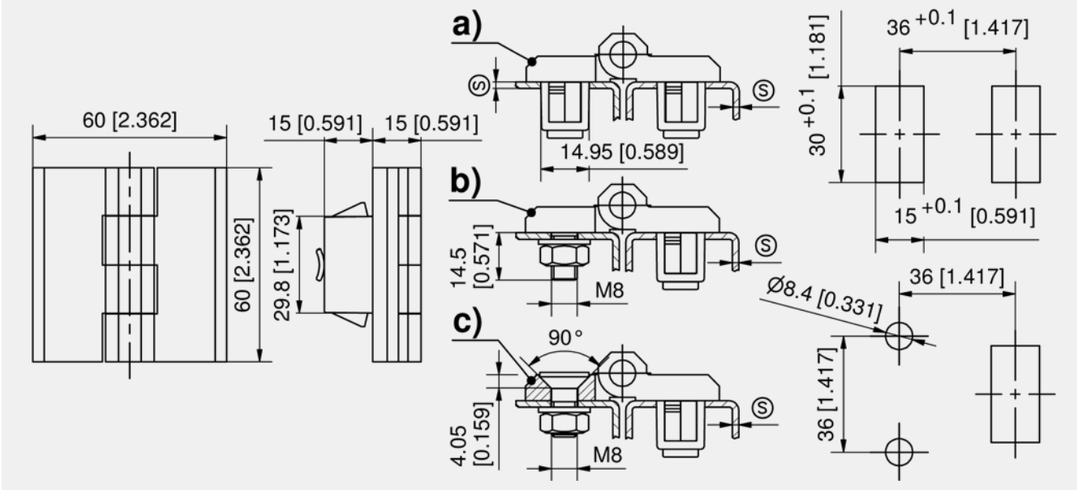

Hinge

	Part Number	Version	Clamping range (S)	Pin version	Installation type	Delivery Unit
a)	418-9202.00-00015	clip-in	1.2 - 1.7 mm	pressed in	tool-less	10 pcs.
a)	418-9202.00-00020	clip-in	1.7 - 2.2 mm	pressed in	tool-less	10 pcs.
a)	418-9202.00-00025	clip-in	2.2 - 2.7 mm	pressed in	tool-less	10 pcs.
a)	418-9202.00-00030	clip-in	2.7 - 3.2 mm	pressed in	tool-less	10 pcs.
a)	418-9202.00-00035	clip-in	3.2 - 3.7 mm	pressed in	tool-less	10 pcs.
b)	418-9203.00-00015	Screws M8 molded in	1.2 - 1.7 mm	pressed in	tool-less / screw-on	10 pcs.
b)	418-9203.00-00020	Screws M8 molded in	1.7 - 2.2 mm	pressed in	tool-less / screw-on	10 pcs.
b)	418-9203.00-00025	Screws M8 molded in	2.2 - 2.7 mm	pressed in	tool-less / screw-on	10 pcs.
b)	418-9203.00-00030	Screws M8 molded in	2.7 - 3.2 mm	pressed in	tool-less / screw-on	10 pcs.
c)	418-9208.00-00015	with countersunk holes for M8	1.2 - 1.7 mm	pressed in	tool-less / screw-on	10 pcs.
c)	418-9208.00-00020	with countersunk holes for M8	1.7 - 2.2 mm	pressed in	tool-less / screw-on	10 pcs.
c)	418-9208.00-00025	with countersunk holes for M8	2.2 - 2.7 mm	pressed in	tool-less / screw-on	10 pcs.
c)	418-9208.00-00030	with countersunk holes for M8	2.7 - 3.2 mm	pressed in	tool-less / screw-on	10 pcs.
c)	418-9208.00-00035	with countersunk holes for M8	3.2 - 3.7 mm	pressed in	tool-less / screw-on	10 pcs.

+	Accessories
764	292-0301.15-00000 **Tool for uninstallation**
764	292-0306.80-02530 **Tool for uninstallation**
763	292-0701.15-01530 **Reinforcement plate for cutout**

all product details ▸ on DIRAK.com

4-270DST

Hinge 76x60 Pr01 270°

Advantages

- Screw-on hinge.
- For nested doors.
- Hinge visible.
- RH / LH application.
- 270° Opening angle.
- Allowing application around corner.

Materials

- **Hinge halves:** zinc die, blasted chrome plated or black
- **Pin:** stainless steel

Remarks

Combination of versions on request.

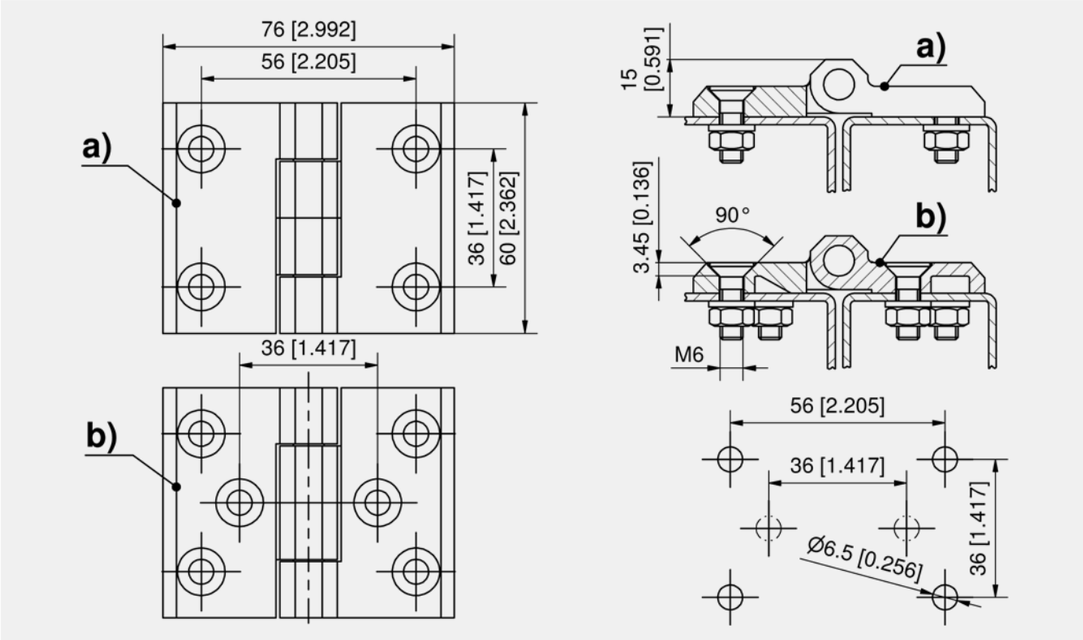

Hinge, zinc die

	Part Number	Version	Surface	Pin version	Installation type	Delivery Unit
a)	218-9205.00-00000	for countersunk screws M6 with 4 holes	blasted chrome plated	pressed in	screw-on	10 pcs.
a)	218-9206.00-00000	for countersunk screws M6 with 4 holes	black	pressed in	screw-on	10 pcs.
b)	218-9207.00-00000	for countersunk screws M6 with 6 holes	blasted chrome plated	pressed in	screw-on	10 pcs.
b)	218-9208.00-00000	for countersunk screws M6 with 6 holes	black	pressed in	screw-on	10 pcs.

4-272
◂ all product details on DIRAK.com

Hinge Pr01 270°

Advantages

- Screw-on hinge for M8 countersunk screws.
- For nested doors.
- Hinge visible.
- RH / LH application.
- 270° Opening angle.

Materials

- **Hinge halves:** zinc die, blasted chrome plated or black
- **Pin:** stainless steel

Remarks

1. drill holes are provided at these points, from the underside. They can be drilled out if required.

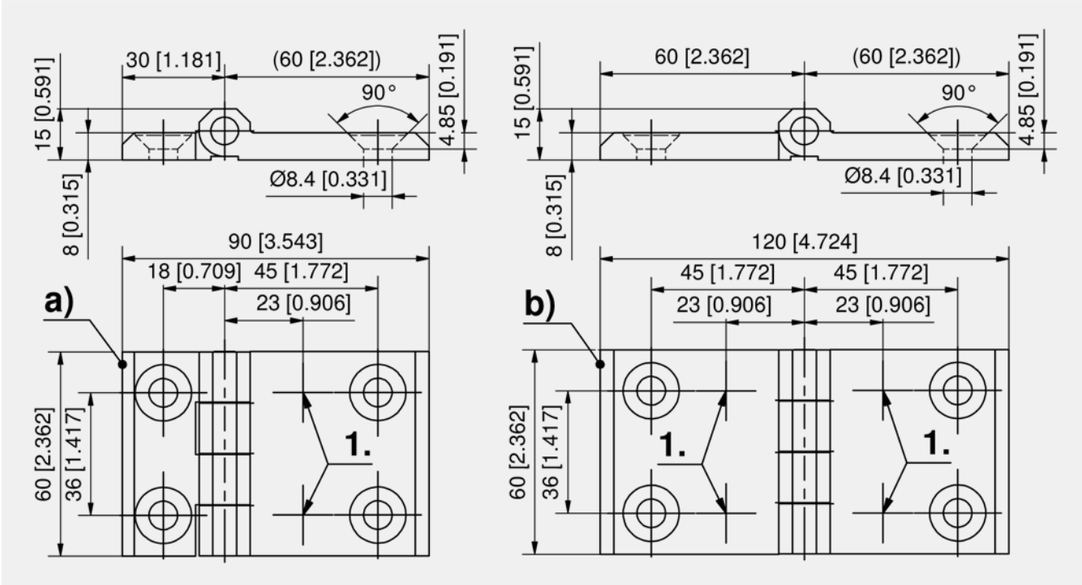

Hinge, zinc die

	Part Number	Version	Surface	Pin version	Installation type	Delivery Unit
a)	218-9216.00-00000	different Hinge half lengths	blasted chrome plated	pressed in	screw-on	6 pcs.
a)	218-9218.00-00000	different Hinge half lengths	black	pressed in	screw-on	6 pcs.
b)	218-9217.00-00000	identical Hinge half lengths	blasted chrome plated	pressed in	screw-on	6 pcs.
b)	218-9219.00-00000	identical Hinge half lengths	black	pressed in	screw-on	6 pcs.

all product details ▸ on DIRAK.com
4-275

Hinge Pr01 270°

[4-274]

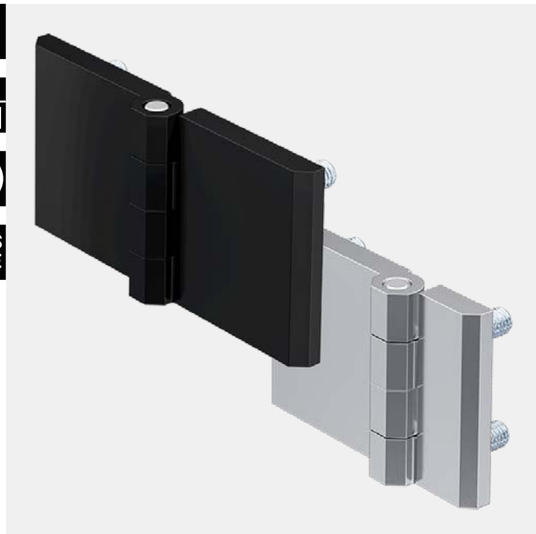

Advantages

- Screw-on hinge with M8 molded in screws.
- For nested doors.
- Hinge visible.
- RH / LH application.
- 270° Opening angle.

Materials

- **Hinge halves:** zinc die, blasted chrome plated or black
- **Molded in screws:** steel, zinc plated
- **Pin:** stainless steel

Remarks

The short hinge half length is also available with countersunk holes, please see product system 4-270 and 4-272.

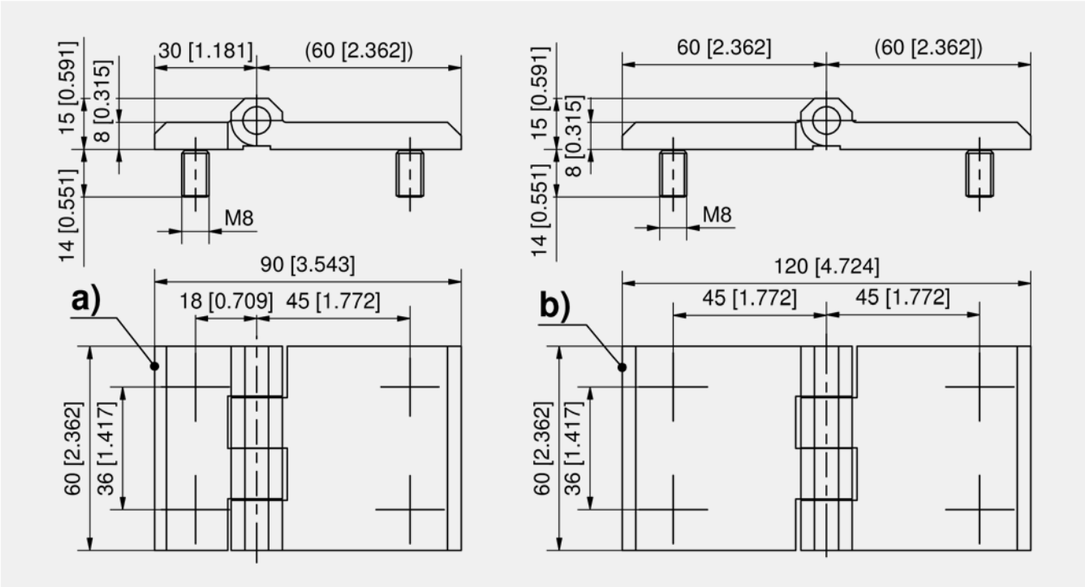

Hinge, zinc die

	Part Number	Version	Surface	Pin version	Installation type	Delivery Unit
a)	218-9209.00-00000	different Hinge half lengths	blasted chrome plated	pressed in	screw-on	6 pcs.
a)	218-9210.00-00000	different Hinge half lengths	black	pressed in	screw-on	6 pcs.
b)	218-9211.00-00000	identical Hinge half lengths	blasted chrome plated	pressed in	screw-on	6 pcs.
b)	218-9212.00-00000	identical Hinge half lengths	black	pressed in	screw-on	6 pcs.

4-274

◂ all product details on DIRAK.com

DST Hinge Pr01 270°

[4-274DST]

Advantages

- Hinge with DIRAK-SNAP-Technology.
- For nested doors.
- Hinge visible.
- RH / LH application.
- 270° Opening angle.
- The short hinge half length is with DST, the long hinge half is with molded in countersunk screws or countersunk holes for M6.

Materials

- **Hinge-parts:** zinc die, black
- **Pin:** stainless steel
- **Snap wedges:** sintered steel, zinc plated

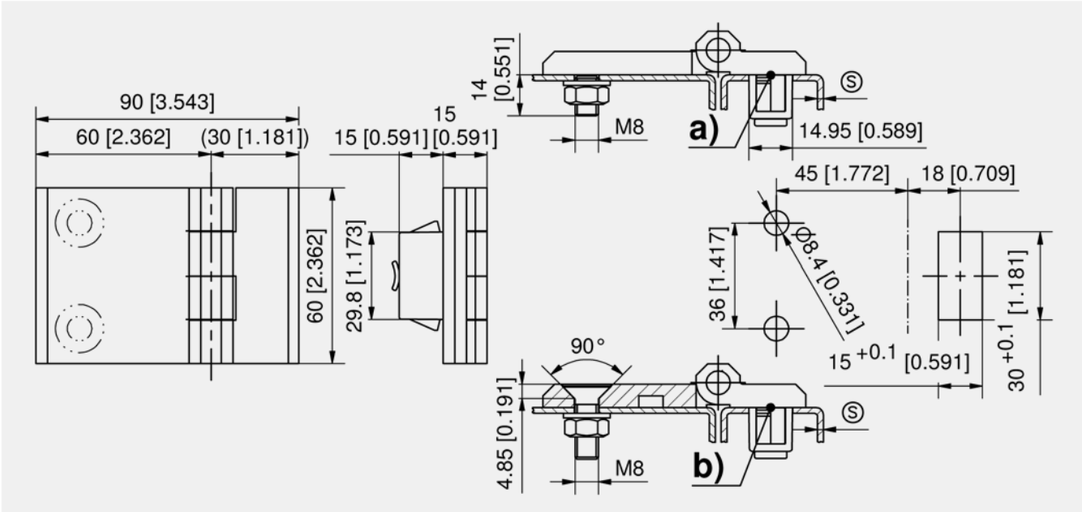

Hinge

	Part Number	Clamping range (S)	Version	Pin version	Installation type	Delivery Unit
a)	418-9205.00-00015	1.2 - 1.7 mm	Screws M8 molded in	pressed in	tool-less / screw-on	10 pcs.
a)	418-9205.00-00020	1.7 - 2.2 mm	Screws M8 molded in	pressed in	tool-less / screw-on	10 pcs.
a)	418-9205.00-00025	2.2 - 2.7 mm	Screws M8 molded in	pressed in	tool-less / screw-on	10 pcs.
a)	418-9205.00-00030	2.7 - 3.2 mm	Screws M8 molded in	pressed in	tool-less / screw-on	10 pcs.
a)	418-9205.00-00035	3.2 - 3.7 mm	Screws M8 molded in	pressed in	tool-less / screw-on	10 pcs.
b)	418-9204.00-00015	1.2 - 1.7 mm	with countersunk holes for M8	pressed in	tool-less / screw-on	10 pcs.
b)	418-9204.00-00020	1.7 - 2.2 mm	with countersunk holes for M8	pressed in	tool-less / screw-on	10 pcs.
b)	418-9204.00-00025	2.2 - 2.7 mm	with countersunk holes for M8	pressed in	tool-less / screw-on	10 pcs.
b)	418-9204.00-00030	2.7 - 3.2 mm	with countersunk holes for M8	pressed in	tool-less / screw-on	10 pcs.
b)	418-9204.00-00035	3.2 - 3.7 mm	with countersunk holes for M8	pressed in	tool-less / screw-on	10 pcs.

	Accessories
764	292-0301.15-00000 **Tool for uninstallation**
764	292-0306.80-02530 **Tool for uninstallation**
763	292-0701.15-01530 **Reinforcement plate for cutout**

all product details ▸ on DIRAK.com

4-274DST

Hinge Pr01 with Fastening Bracket 180° [4-251]

Advantages

- Bracket allows fixing of hinge half with **just** one screw.
- Bracket with permanent/ attached seal for secure fastening to sheet metal.
- IP 65/67 according to DIN EN 60529 and IP69K according to DIN 40050.
- Maximum cutout size allows vertical adjustability and tolerance compensation.
- For nested doors.
- Hinge visible.
- RH / LH application.
- 180° Opening angle.
- Separate installation of the hinge halves.
- Assembly of the two-piece POM pin by hand force.
- Hinge with six knuckles for better stability.
- Suitable for outdoor application.

Materials

- **Hinge halves and bracket:** zinc die, black
- **Pin:** POM, black
- **External hexagon head screw M6x12 DIN933**: zinc-plated steel
- **Moulded seal and o-ring:** NBR Perbunan

Remarks

Max. sheet thickness 4mm.

(Only in connection with the included external hexagon head screw M6x12. For larger sheet thicknesses please use a correspondingly longer screw)

1. min. cutout
2. max. cutout for tolerance adjustment
3. o-ring
4. fastening screws

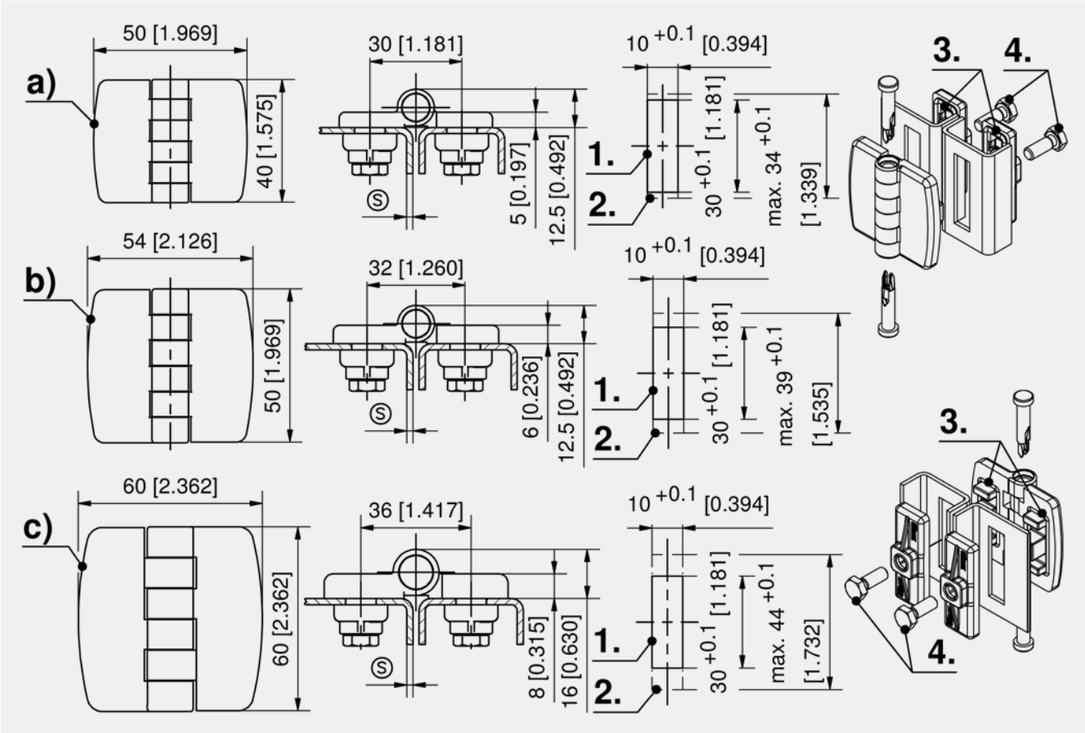

Hinge with fastening bracket

	Part Number	Dimension	Min. cutout	Max. cutout	Adjustment	Pin version	Installation type	Delivery Unit
a)	218-9801.00-00000	50 x 40 mm	10 x 30 mm	10 x 34 mm	+/- 2 mm	loose, 2-parts	screw-on	10 pcs.
b)	218-9802.00-00000	54 x 50 mm	10 x 30 mm	10 x 39 mm	+/- 4.5 mm	loose, 2-parts	screw-on	10 pcs.
c)	218-9803.00-00000	60 x 60 mm	10 x 30 mm	10 x 44 mm	+/- 7 mm	loose, 2-parts	screw-on	10 pcs.

4-251
◂ all product details on DIRAK.com

Hinge Pr01 with Fastening Bracket 180° Stainless Steel [7-207]

Advantages

- Bracket allows fixing of hinge half with just one screw.
- Bracket with permanent/ attached seal for secure fastening to sheet metal.
- IP 65/67 according to DIN EN 60529 and IP69K according to DIN 40050.
- Maximum cutout size allows vertical adjustability and tolerance compensation.
- For nested doors.
- Hinge visible.
- RH / LH application.
- 180° Opening angle.
- Separate installation of the hinge halves.
- Assembly of the two-piece POM pin by hand force.
- Hinge with six knuckles for better stability.
- Suitable for outdoor application.

Materials

- **Hinge halves and bracket:** AISI 316
- **Pin:** POM, black
- **External hexagon head screw M6x12 DIN933:** AISI 304
- **Moulded seal and o-ring:** NBR Perbunan

Remarks

Max. sheet thickness 4mm.

(Only in connection with the included external hexagon head screw M6x12. For larger sheet thicknesses please use a correspondingly longer screw)

1. min. cutout
2. max. cutout for tolerance adjustment
3. o-ring
4. fastening screws

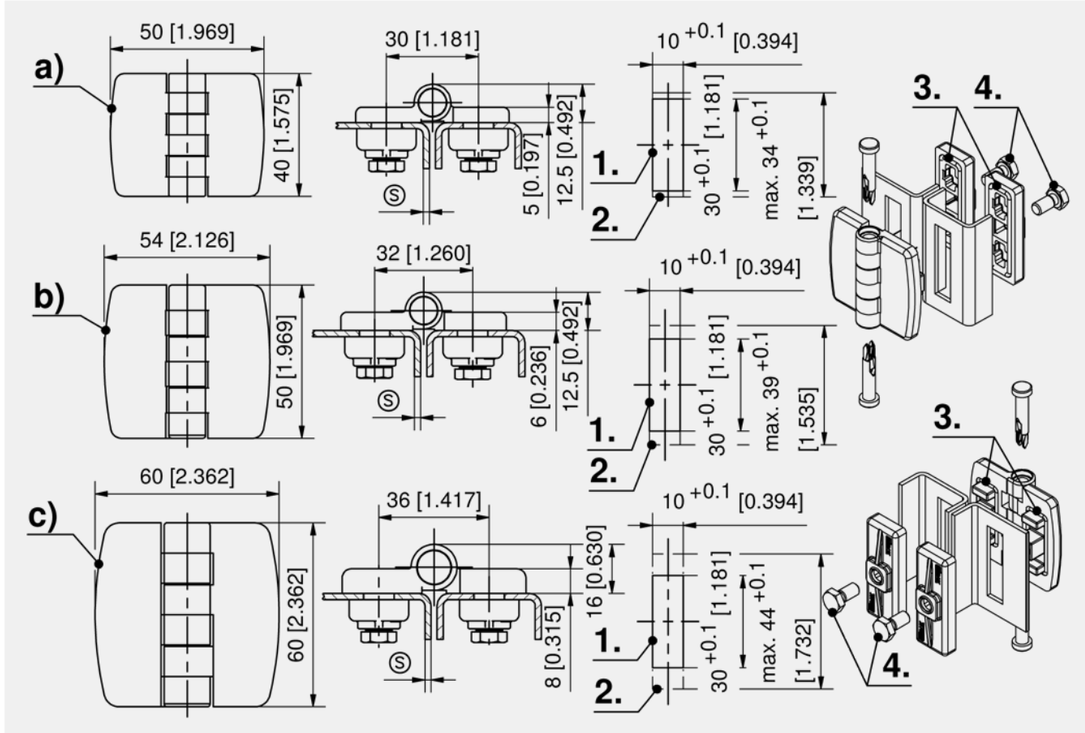

Hinge with fastening bracket

	Part Number	Dimension	Min. cutout	Max. cutout	Adjustment	Pin version	Installation type	Delivery Unit
a)	218-9807.00-00000	50 x 40 mm	10 x 30 mm	10 x 34 mm	+/- 2 mm	loose, 2-parts	screw-on	10 pcs.
b)	218-9808.00-00000	54 x 50 mm	10 x 30 mm	10 x 39 mm	+/- 4.5 mm	loose, 2-parts	screw-on	10 pcs.
c)	218-9809.00-00000	60 x 60 mm	10 x 30 mm	10 x 44 mm	+/- 7 mm	loose, 2-parts	screw-on	10 pcs.

all product details ▸ on DIRAK.com
7-207

Hinge 76x60, adjustable Pr01 270°

[4-271]

Advantages

- 2D Hinge, screw-on,
- For nested doors.
- Hinge visible.
- RH / LH application.
- 270° Opening angle.
- The teeth on the adjusting bushings and in the oblong holes of the hinge halves prevent slipping of the hinge.
- In contrast with conventional oblong holes, the countersunk heads of the screws have full contact with the adjusting bushings.
- These bushings completely cover the oblong holes, preventing deposits of dust within the adjusting area.

Materials

- **Hinge halves and bushings:** zinc die, glossy chrome plated or black
- **Pin:** stainless steel

Remarks

1. adjusting bushings

Matching arrow tips mark the 0-position.

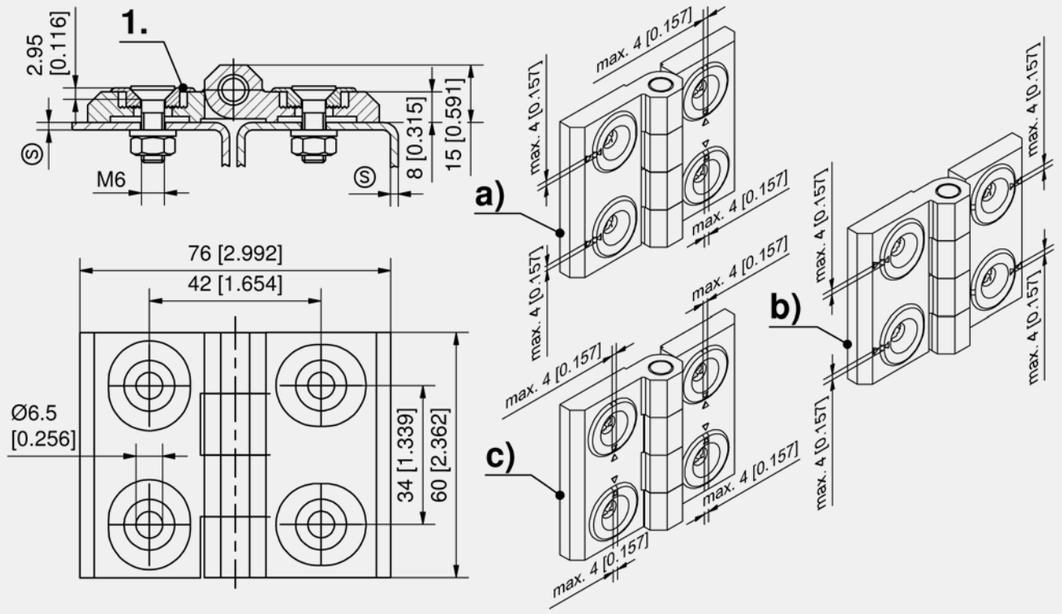

Hinge, zinc die

	Part Number	Adjustment	Surface	Pin version	Installation type	Delivery Unit
a)	218-9605.00-00000	horizontal / vertical	glossy chrome plated	pressed in	screw-on	6 pcs.
a)	218-9606.00-00000	horizontal / vertical	black	pressed in	screw-on	6 pcs.
b)	218-9603.00-00000	vertical	glossy chrome plated	pressed in	screw-on	6 pcs.
b)	218-9604.00-00000	vertical	black	pressed in	screw-on	6 pcs.
c)	218-9601.00-00000	horizontal	glossy chrome plated	pressed in	screw-on	6 pcs.
c)	218-9602.00-00000	horizontal	black	pressed in	screw-on	6 pcs.

4-271
◂ all product details on DIRAK.com

DST Hinge Pr01 180°

[4-271DST]

Advantages

- For nested doors.
- Hinge visible.
- RH / LH application.
- 180° Opening angle.
- One hinge half with DIRAK-SNAP-Technology, the second hinge half can be adjusted (horizontal / vertical).
- The teeth on the adjusting bushings and in the oblong holes of the second hinge half prevent slipping of the hinge.
- In contrast with conventional oblong holes, the countersunk heads of the screws have full contact with the adjusting bushings.
- These bushings completely cover the oblong holes, preventing deposits of dust within the adjusting area.

Materials

- **Hinge halves and adjusting bushings:** zinc die, black
- **Pin:** stainless steel
- **Snap wedges:** sintered steel

Remarks

1. adjusting bushings

Matching arrow tips mark the 0-position.

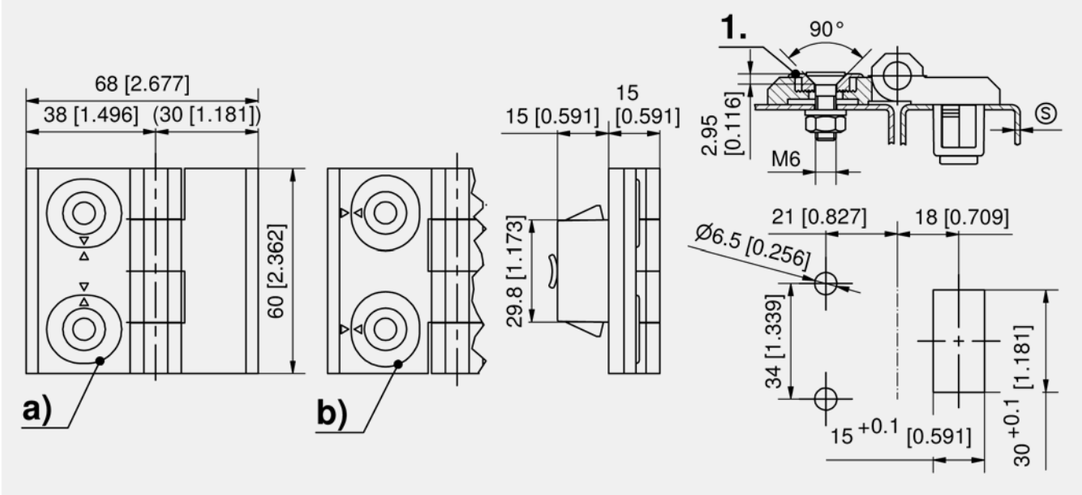

Hinge

	Part Number	Clamping range (S)	Adjustment	Pin version	Installation type	Delivery Unit
a)	418-9206.00-00020	1.7 - 2.2 mm	horizontal	pressed in	tool-less / screw-on	10 pcs.
a)	418-9206.00-00025	2.2 - 2.7 mm	horizontal	pressed in	tool-less / screw-on	10 pcs.
a)	418-9206.00-00030	2.7 - 3.2 mm	horizontal	pressed in	tool-less / screw-on	10 pcs.
a)	418-9206.00-00035	3.2 - 3.7 mm	horizontal	pressed in	tool-less / screw-on	10 pcs.
b)	418-9207.00-00020	1.7 - 2.2 mm	vertical	pressed in	tool-less / screw-on	10 pcs.
b)	418-9207.00-00025	2.2 - 2.7 mm	vertical	pressed in	tool-less / screw-on	10 pcs.
b)	418-9207.00-00030	2.7 - 3.2 mm	vertical	pressed in	tool-less / screw-on	10 pcs.

	Accessories
764	292-0301.15-00000 **Tool for uninstallation**
764	292-0306.80-02530 **Tool for uninstallation**
763	292-0701.15-01530 **Reinforcement plate for cutout**

all product details ▸ on DIRAK.com
4-271DST

Hinge Pr01 with Stud 180° Stainless Steel [7-201.01]

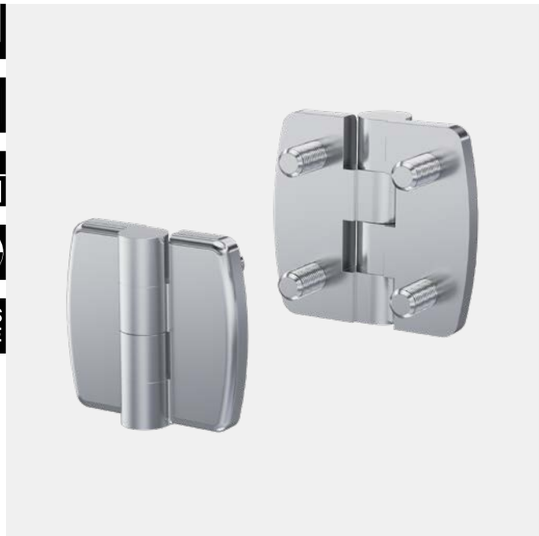

Advantages

- For nested doors.
- Hinge visible.
- RH / LH application.
- 180° Opening angle.
- With welded stud.
- Both sides welded pin.
- Vandalism safety.

Materials

- **Hinge:** AISI 316

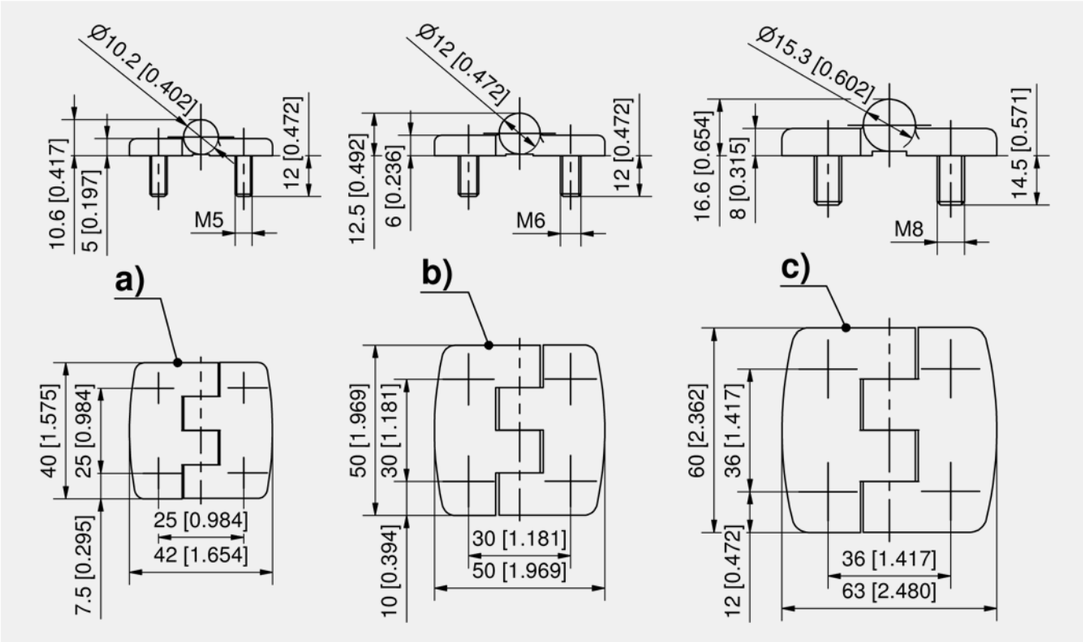

Hinge

Part Number	Dimension	Fastening type	max. tightening torque	Pin version	Installation type	Delivery Unit
218-9314.00-00000	40 x 42	M5	2.5 Nm	welded	screw-on	10 pcs.
218-9315.00-00000	50 x 50	M6	3.5 Nm	welded	screw-on	10 pcs.
218-9316.00-00000	60 x 63	M8	8.4 Nm	welded	screw-on	10 pcs.

7-201.01
◂ all product details on DIRAK.com

Hinge Pr01 180° Stainless Steel [7-201]

Advantages

- For nested doors.
- Hinge visible.
- RH / LH application.
- 180° Opening angle.
- Vibration-proof.
- Vandalism safety due to both sides welded, hinge pin not visible.

Materials

- **Hinge parts and pin:** AISI 316

Remarks

Fastening with countersunk screws M5, M6 or M8 to DIN 7991

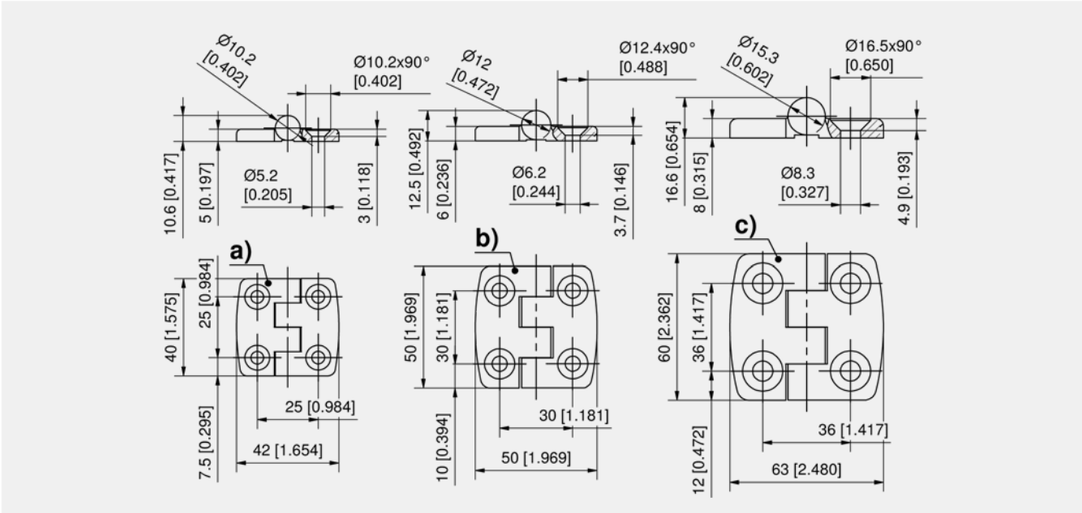

Hinge

	Part Number	Dimension	Pin version	Installation type	Delivery Unit
a)	218-9309.00-00000	40 x 42	welded	screw-on	10 pcs.
b)	218-9310.00-00000	50 x 50	welded	screw-on	10 pcs.
c)	218-9311.00-00000	60 x 63	welded	screw-on	10 pcs.

all product details ▸ on DIRAK.com
7-201

Hinge Pr01 270° Stainless Steel

[7-203]

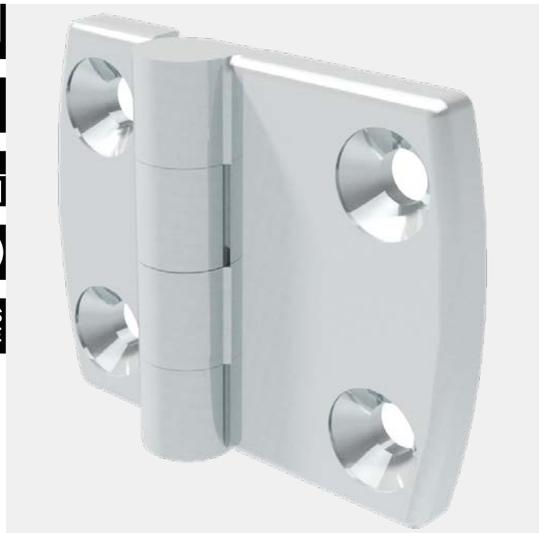

Advantages

- For nested doors.
- Hinge visible.
- RH / LH application.
- 270° Opening angle.
- Vibration-proof.
- Vandalism safety due to both sides welded, hinge pin not visible.

Materials

- **Hinge parts and pin:** AISI 316

Remarks

Fastening with countersunk screws M6 to DIN 7991

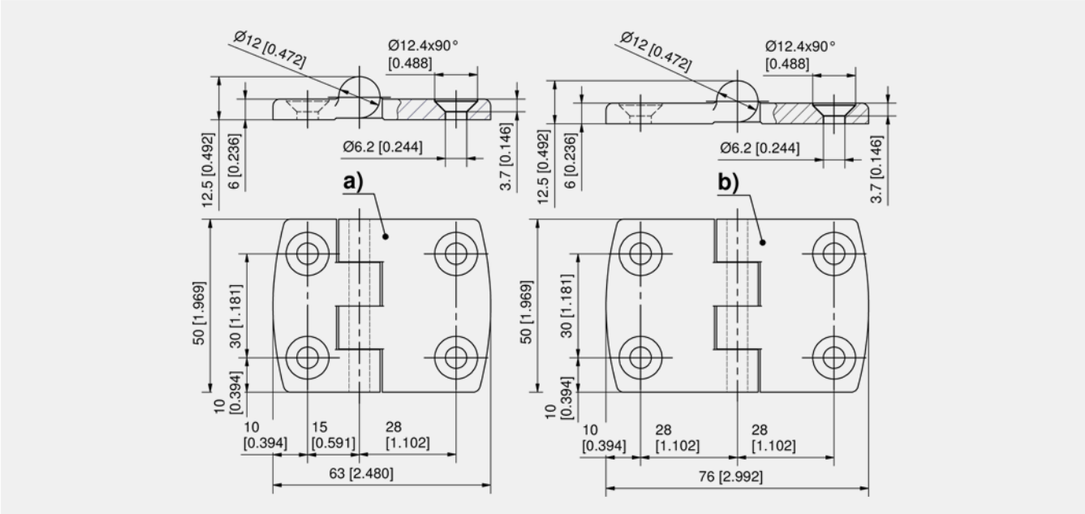

Hinge

	Part Number	Dimension	Pin version	Installation type	Delivery Unit
a)	218-9312.00-00000	50 x 63	welded	screw-on	10 pcs.
b)	218-9313.00-00000	50 x 76	welded	screw-on	10 pcs.

7-203

◂ all product details on DIRAK.com

Hinge, adjustable Pr01 180° Stainless Steel

[7-204]

Advantages

- For nested doors.
- Hinge visible.
- RH / LH application.
- 180° Opening angle.

Materials

- **Hinge parts and pin:** AISI 316

Remarks

Fastening with cylinder screws e.g. M6 to DIN 6912.

1. centre of the bore hole

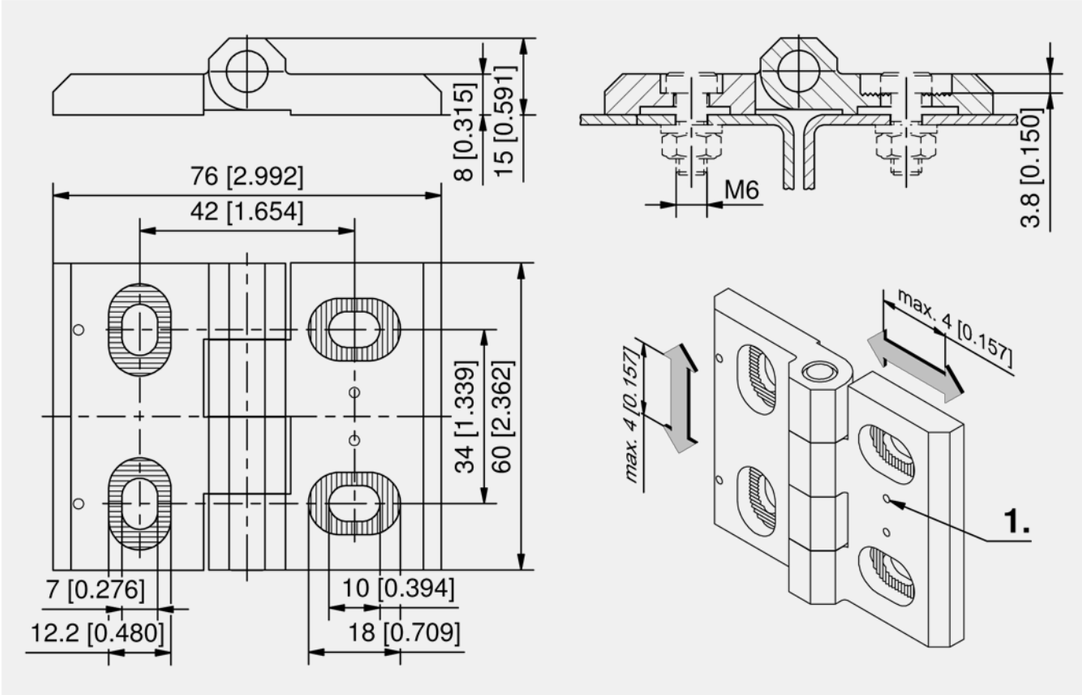

Hinge, adjustable

Part Number	Dimension	Adjustment	Pin version	Installation type	Delivery Unit
218-9613.00-00001	60 x 76	Width/ Height	pressed in	screw-on	10 pcs.

all product details ▸ on DIRAK.com

7-204

Hinge Pr01 270° Stainless Steel

[7-262]

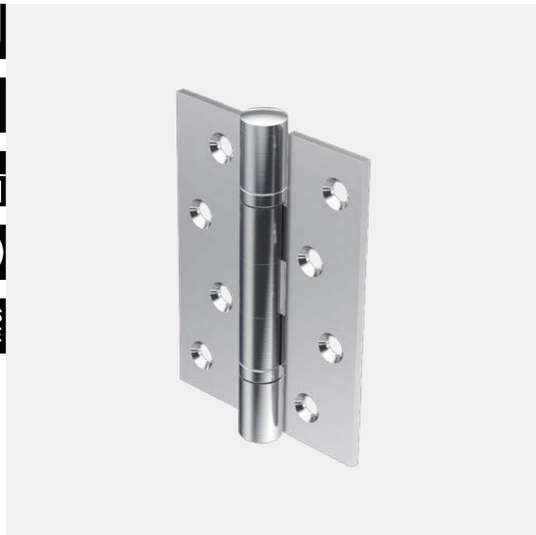

Advantages

- For nested doors.
- Hinge visible.
- RH / LH application.
- 270° Opening angle.

Materials

- **Hinge complete:** AISI 304, satin polished

Remarks

1. bearing washers

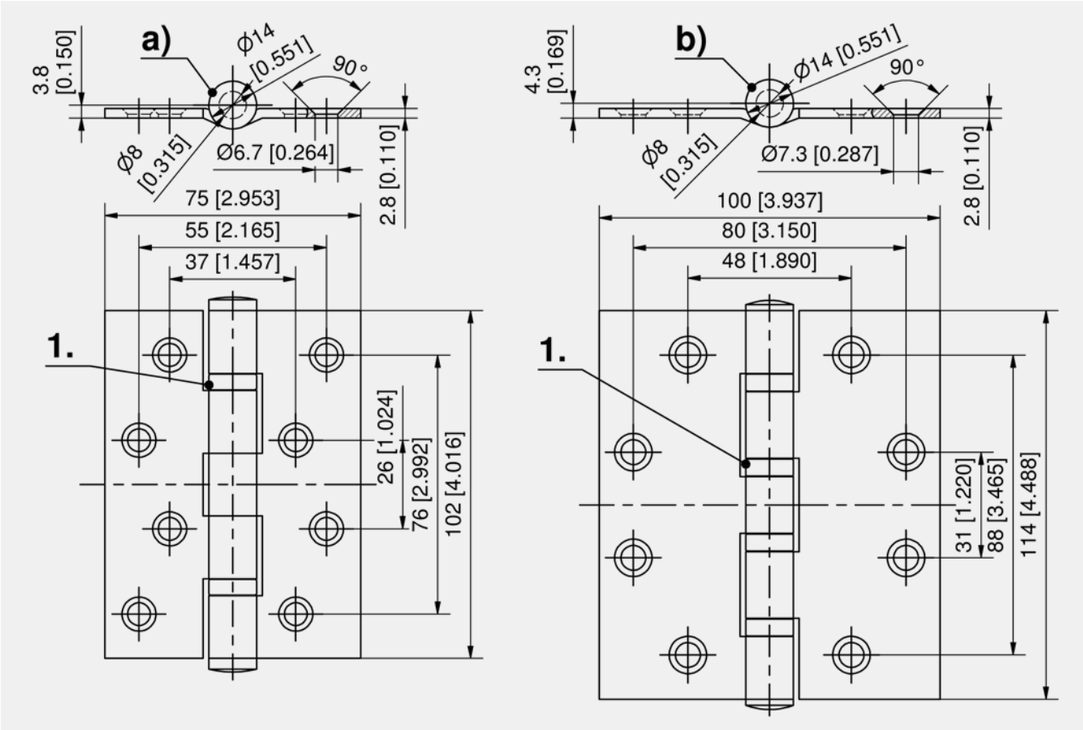

Hinge

	Part Number	Width W	Height H	Pin version	Installation type	Delivery Unit
a)	267-9106.00-00000	75 mm	102 mm	pressed in	screw-on	10 pcs.
b)	267-9107.00-00000	100 mm	114 mm	pressed in	screw-on	10 pcs.

7-262

◂ all product details on DIRAK.com

Hinge Pr01 180°

[4-315]

Advantages

- Weld-on hinge for heavy duty applications, made from forged profile steel.
- For nested doors.
- Hinge visible.
- RH / LH application.
- 180° Opening angle.

Materials

- **Hinge:** steel, untreated

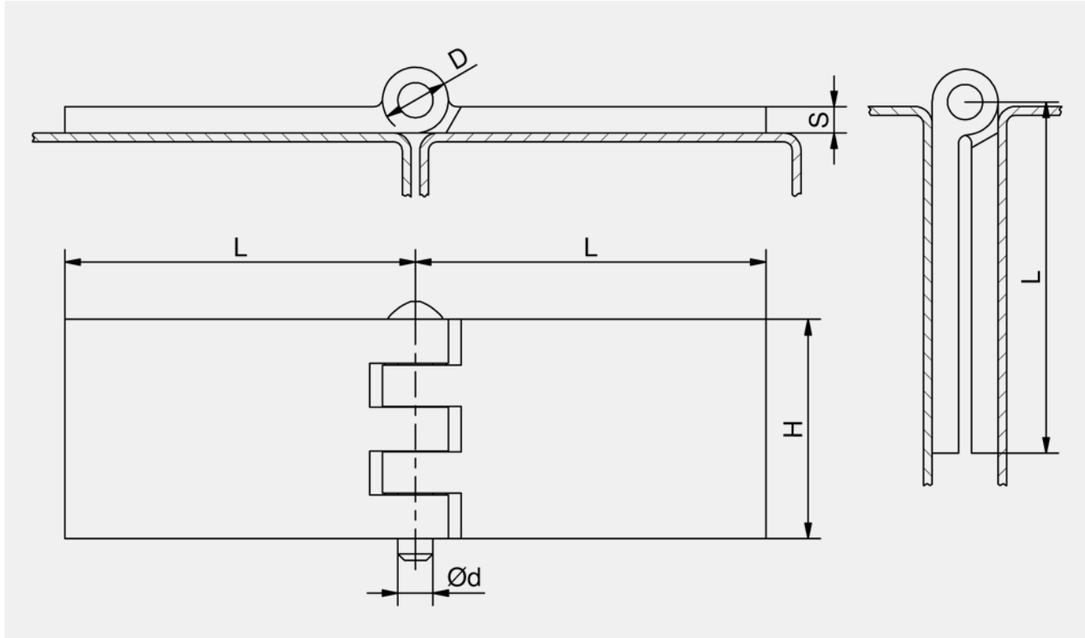

Hinge

Part Number	Height H	Length L	Material thickness (S)	Ø Knurl D	Pin version	Ø Pin d	Installation type	Delivery Unit
233-9101.00-00000	40 mm	60 mm	5 mm	12 mm	loose, durably fastened	6 mm	weld-on	10 pcs.
233-9102.00-00000	40 mm	100 mm	5 mm	12 mm	loose, durably fastened	6 mm	weld-on	10 pcs.
233-9103.00-00000	50 mm	60 mm	5 mm	12 mm	loose, durably fastened	6 mm	weld-on	10 pcs.
233-9104.00-00000	50 mm	100 mm	5 mm	12 mm	loose, durably fastened	6 mm	weld-on	10 pcs.
233-9201.00-00000	50 mm	80 mm	6 mm	15 mm	loose, durably fastened	8 mm	weld-on	10 pcs.
233-9202.00-00000	60 mm	60 mm	6 mm	15 mm	loose, durably fastened	8 mm	weld-on	10 pcs.
233-9203.00-00000	80 mm	80 mm	6 mm	15 mm	loose, durably fastened	8 mm	weld-on	10 pcs.
233-9204.00-00000	80 mm	100 mm	6 mm	15 mm	loose, durably fastened	8 mm	weld-on	10 pcs.

all product details ▸ on DIRAK.com

4-315

Hinge Pr01 270°

[4-278]

Advantages

- Screw-on hinge.
- For nested doors.
- Hinge visible.
- RH / LH application
- 270° Opening angle.

Materials

a) and b)

- **Hinge halves:** steel, zinc plated

c)

- **Hinge complete:** steel, chrome plated or dull brass plated

Remarks

1. both rolls of the long shank welded
2. grease nipple (version a)+b))
3. tight pin

As an alternative please refer to the stainless steel version on product system 7-260.

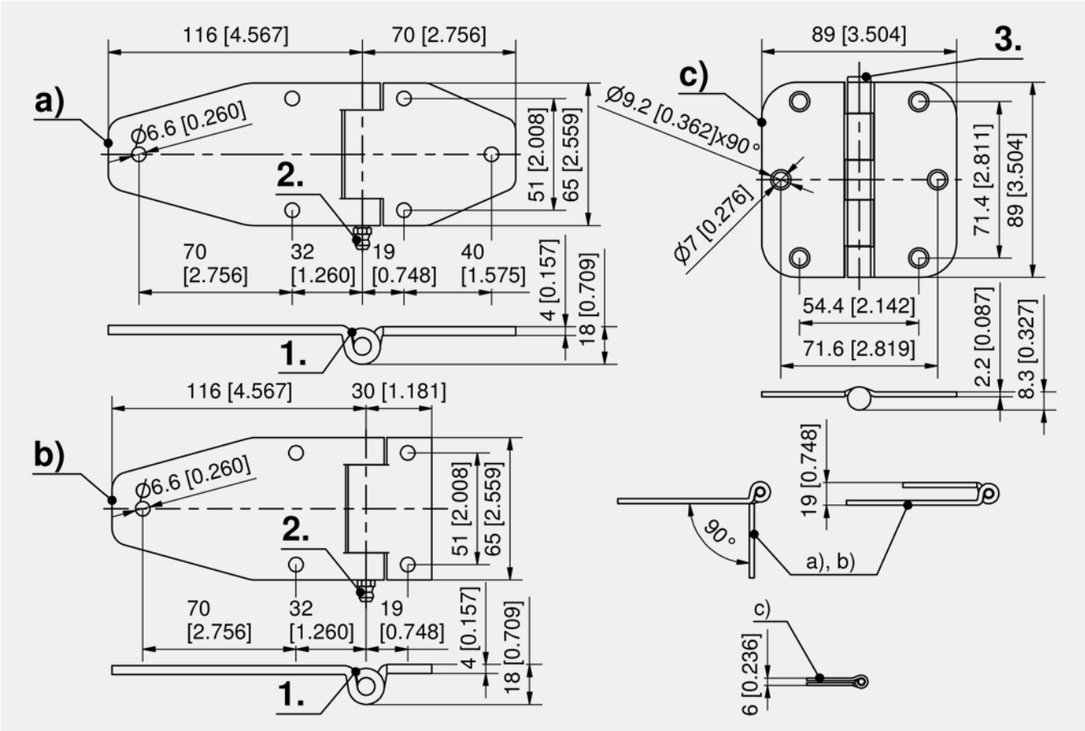

Hinge, steel

	Part Number	Surface	Pin version	Installation type	Delivery Unit
a)	267-9003.00-00000	zinc plated	pressed in	screw-on	10 pcs.
b)	267-9004.00-00000	zinc plated	pressed in	screw-on	10 pcs.
c)	267-9701.00-00000	chrome plated	pressed in	screw-on	10 pcs.
c)	267-9702.00-00000	matte brass	pressed in	screw-on	10 pcs.

4-278

◂ all product details on DIRAK.com

Hinge Pr01 270° Stainless Steel

[7-260]

Advantages

- For nested doors.
- Hinge visible.
- 270° opening angle.
- Version c) is lift-off.

Materials

- **Hinge complete:** AISI 304, satin polished

Remarks

1. both rolls of the long shank welded
2. grease nipple

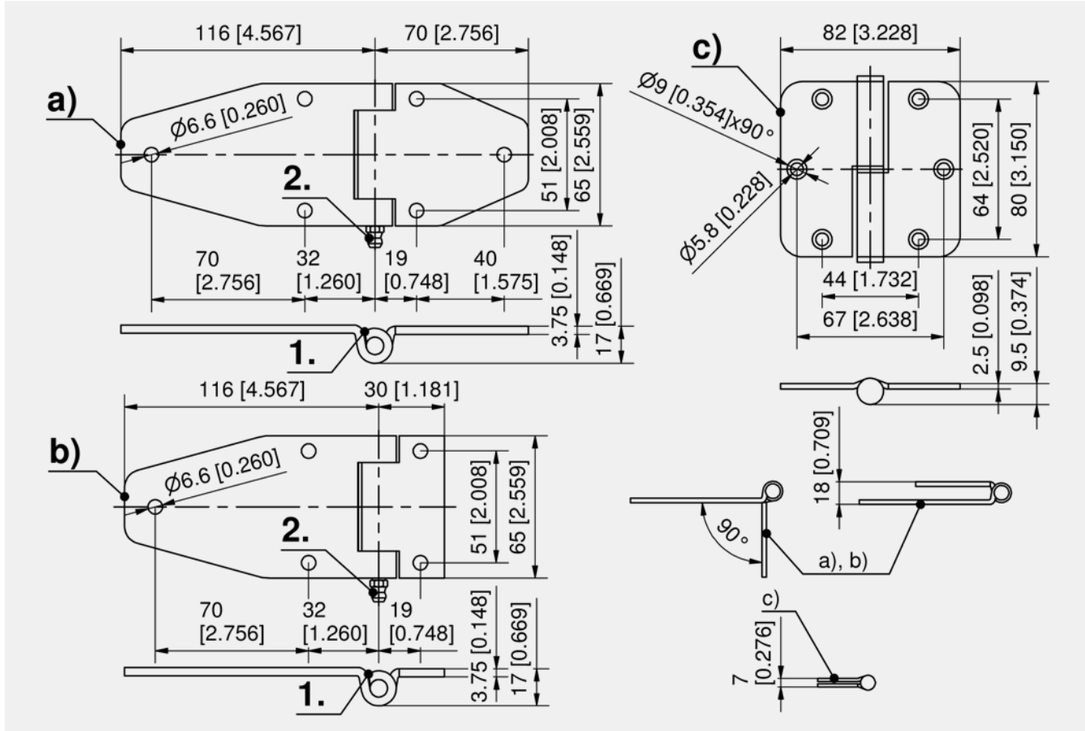

Hinge

	Part Number	Version	Width W	Height H	Pin version	Installation type	Delivery Unit
a)	267-9005.00-00000		186 mm	65 mm	pressed in	screw-on	10 pcs.
b)	267-9007.00-00000	shortened shank	146 mm	65 mm	pressed in	screw-on	10 pcs.
c)	267-9303.00-00000	RH version	82 mm	80 mm	pressed in	screw-on	10 pcs.
c)	267-9304.00-00000	LH version	82 mm	80 mm	pressed in	screw-on	10 pcs.

all product details ▸ on DIRAK.com

7-260

Hinge Pr01 180°

[4-402]

Advantages

- For nested doors.
- Hinge visible.
- RH and LH version.
- 180° Opening angle.
- Low weight.
- Corrosion resistant.
- Lift-off.

Materials

- **Hinge:** PA, black
- **Pin:** stainless steel

Remarks

1. fastening with countersunk screw M5

DIN 7991 or DIN ISO 10642 and DIN 965 or DIN ISO 7046

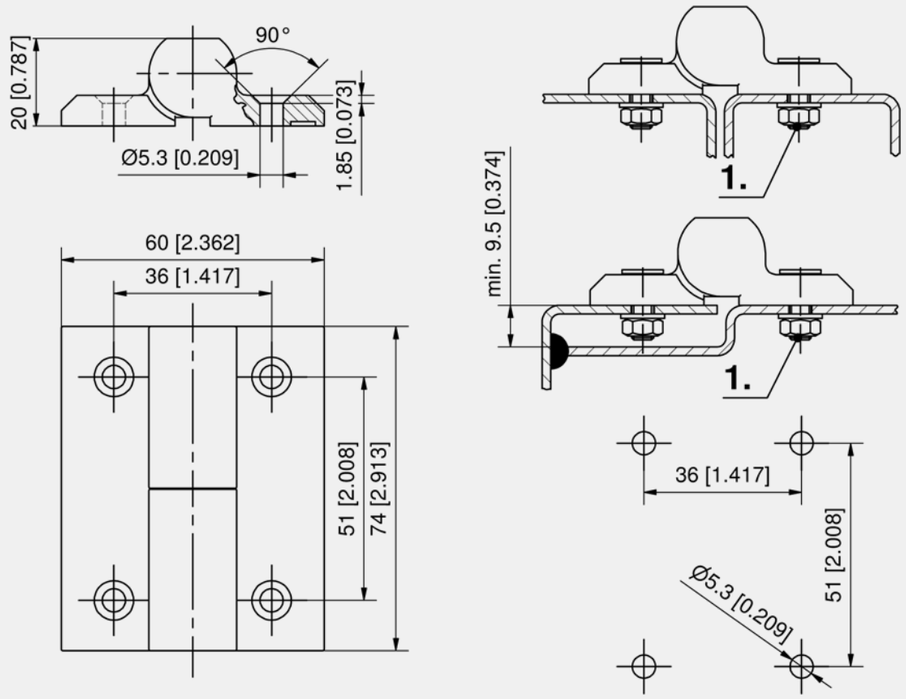

Hinge

Part Number	Version	Pin version	Installation type	Delivery Unit
218-9425.00-00000	RH version	pressed in	screw-on	10 pcs.
218-9426.00-00000	LH version	pressed in	screw-on	10 pcs.

4-402
all product details on DIRAK.com

Hinge Pr01 200° Stainless Steel

[7-220]

Advantages

- Hinge for flush constructions.
- For nested doors.
- Hinge visible.
- RH / LH application.
- 200° Opening angle.
- Very good for installation on narrow frame widths.

Materials

- **Hinge-parts:** AISI 316
- **Washers:** stainless steel

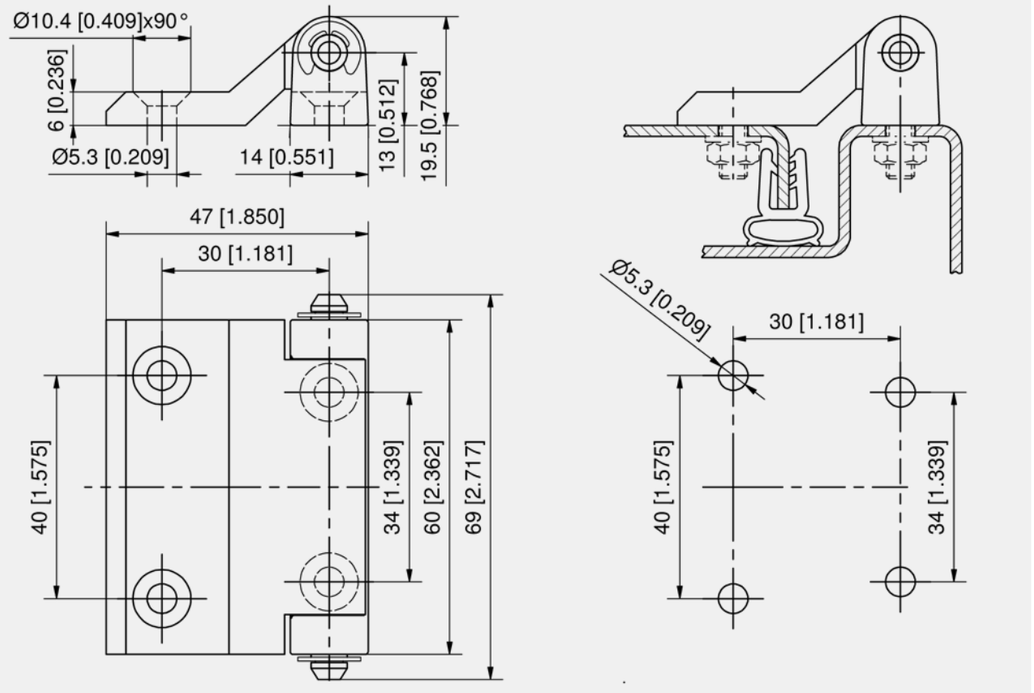

Hinge

Part Number	Width W	Height H	Pin length L	Pin version	Installation type	Delivery Unit
217-9601.00-00000	40 mm	60 mm	69 mm	with groove incl. locking washer DIN6799	screw-on	10 pcs.

all product details on DIRAK.com
7-220

Hinge Pr01 200°

[4-330]

Advantages

- For nested doors.
- Hinge visible.
- RH / LH application.
- 200° Opening angle.
- With PA bushings.

Materials

- **Frame- and door-part:** zinc die, blasted chrome plated or black
- **Pin:** stainless steel or steel, zinc plated
- **Bushings:** PA, natural

Remarks

Delivery is made unassembled.

1. PA bushings

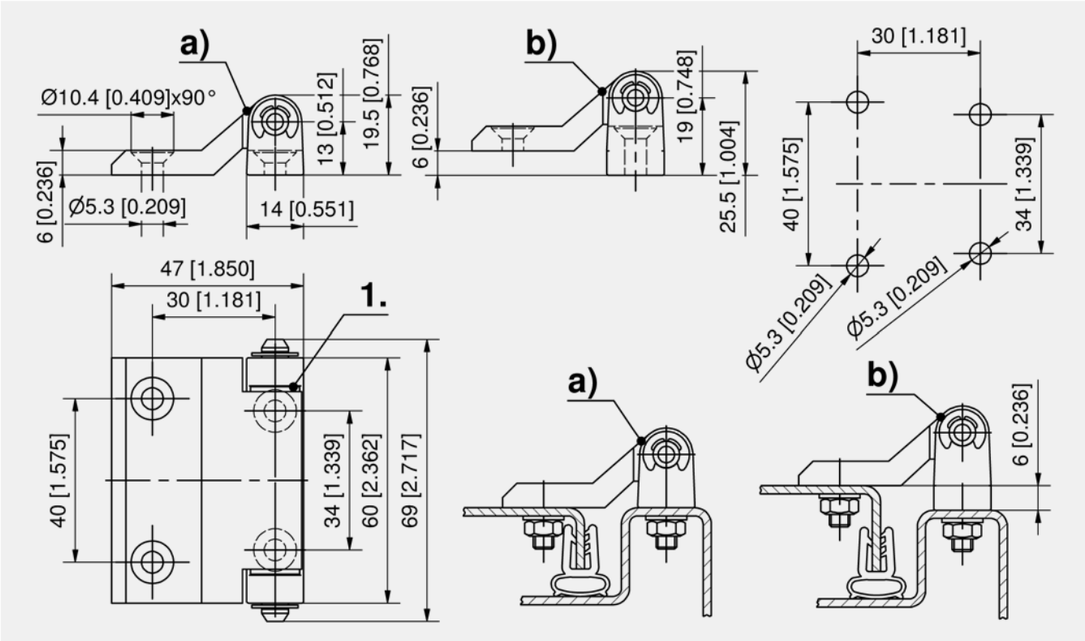

Hinge, zinc die

	Part Number	Surface	Frame-part	Material pin	Pin version	Installation type	Delivery Unit
a)	217-9109.00-00000	blasted chrome plated	normal	steel, zinc plated	with groove incl. locking washer DIN6799	screw-on	6 pcs.
a)	217-9110.00-00000	blasted chrome plated	normal	stainless steel	with groove incl. locking washer DIN6799	screw-on	6 pcs.
b)	217-9116.00-00000	blasted chrome plated	raised	steel, zinc plated	with groove incl. locking washer DIN6799	screw-on	6 pcs.
b)	217-9117.00-00000	blasted chrome plated	raised	stainless steel	with groove incl. locking washer DIN6799	screw-on	6 pcs.
a)	217-9101.00-00000	black	normal	steel, zinc plated	with groove incl. locking washer DIN6799	screw-on	6 pcs.
a)	217-9102.00-00000	black	normal	stainless steel	with groove incl. locking washer DIN6799	screw-on	6 pcs.
b)	217-9103.00-00000	black	raised	steel, zinc plated	with groove incl. locking washer DIN6799	screw-on	6 pcs.
b)	217-9104.00-00000	black	raised	stainless steel	with groove incl. locking washer DIN6799	screw-on	6 pcs.

4-330

◂ all product details on DIRAK.com

Hinge Pr01 200°

[4-340]

Advantages

- For nested doors.
- Hinge visible.
- RH / LH application.
- 200° Opening angle.
- With PA bushings.

Materials

- **Frame- and door-part:** zinc die, blasted chrome plated or black
- **Pin:** stainless steel or steel, zinc plated
- **Bushings:** PA, natural

Remarks

Delivery is made unassembled.

1. PA bushings

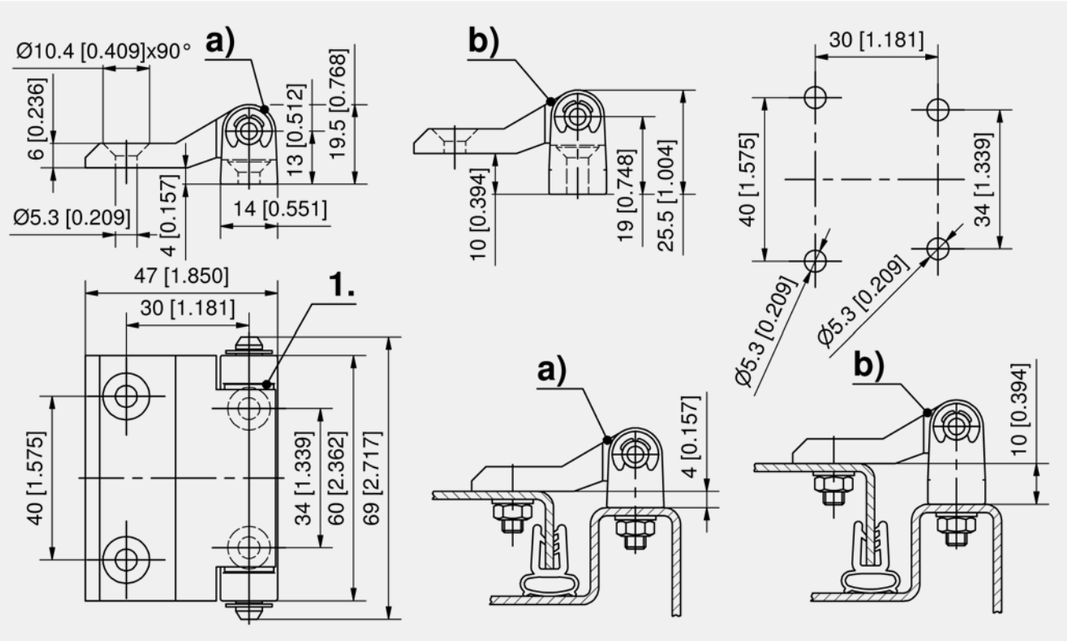

Hinge

	Part Number	Surface	Frame-part	Material pin	Pin version	Installation type	Delivery Unit
a)	217-9111.00-00000	blasted chrome plated	normal	steel, zinc plated	with groove incl. locking washer DIN6799	screw-on	6 pcs.
a)	217-9112.00-00000	blasted chrome plated	normal	stainless steel	with groove incl. locking washer DIN6799	screw-on	6 pcs.
b)	217-9118.00-00000	blasted chrome plated	raised	steel, zinc plated	with groove incl. locking washer DIN6799	screw-on	6 pcs.
b)	217-9119.00-00000	blasted chrome plated	raised	stainless steel	with groove incl. locking washer DIN6799	screw-on	6 pcs.
a)	217-9105.00-00000	black	normal	steel, zinc plated	with groove incl. locking washer DIN6799	screw-on	6 pcs.
a)	217-9106.00-00000	black	normal	stainless steel	with groove incl. locking washer DIN6799	screw-on	6 pcs.
b)	217-9107.00-00000	black	raised	steel, zinc plated	with groove incl. locking washer DIN6799	screw-on	6 pcs.
b)	217-9108.00-00000	black	raised	stainless steel	with groove incl. locking washer DIN6799	screw-on	6 pcs.

all product details ▸ on DIRAK.com

4-340

DST Hinge Pr01 200°

[4-330DST]

Advantages

- For nested doors.
- Hinge visible.
- 200° Opening angle.
- Frame-part with DIRAK-SNAP-Technology.
- Door-part screw-on.

Materials

- **Frame- and door-part:** zinc die, black
- **Loose pin and washers:** steel, zinc plated
- **Fixed pin:** stainless steel
- **Bushing:** PA, natural
- **Snap wedges:** sintered metal, coated

Remarks

1. PA bushings at both ends (version a) and b))

Further details and dimensions see product system 4-330.

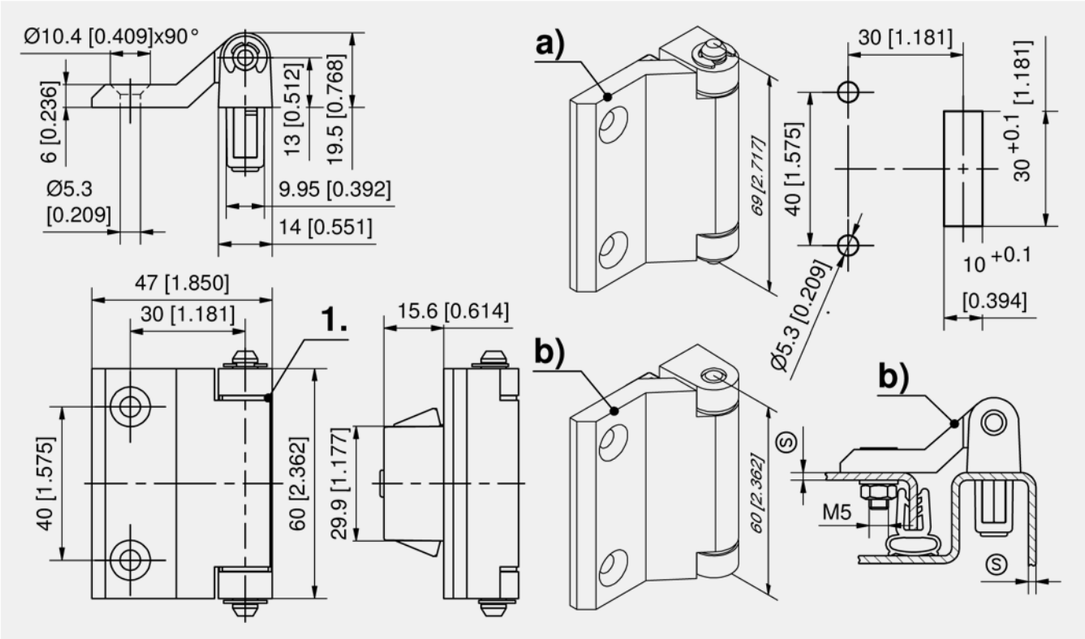

Hinge

	Part Number	Clamping range (S)	Material pin	Pin length L	Pin version	Installation type	Delivery Unit
a)	417-9001.00-00015	1.2 - 1.7 mm	steel, zinc plated	69 mm	with groove incl. locking washer DIN6799	tool-less / screw-on	10 pcs.
a)	417-9001.00-00020	1.7 - 2.2 mm	steel, zinc plated	69 mm	with groove incl. locking washer DIN6799	tool-less / screw-on	10 pcs.
a)	417-9001.00-00025	2.2 - 2.7 mm	steel, zinc plated	69 mm	with groove incl. locking washer DIN6799	tool-less / screw-on	10 pcs.
a)	417-9001.00-00030	2.7 - 3.2 mm	steel, zinc plated	69 mm	with groove incl. locking washer DIN6799	tool-less / screw-on	10 pcs.
b)	417-9101.00-00015	1.2 - 1.7 mm	stainless steel	60 mm	pressed in	tool-less / screw-on	10 pcs.
b)	417-9101.00-00020	1.7 - 2.2 mm	stainless steel	60 mm	pressed in	tool-less / screw-on	10 pcs.
b)	417-9101.00-00025	2.2 - 2.7 mm	stainless steel	60 mm	pressed in	tool-less / screw-on	10 pcs.
b)	417-9101.00-00030	2.7 - 3.2 mm	stainless steel	60 mm	pressed in	tool-less / screw-on	10 pcs.

	Accessories
764	292-0306.80-02530 **Tool for uninstallation**
762	292-0401.00-03010 **Cutout-cover**
763	292-0702.15-01030 **Reinforcement plate for cutout**

4-330DST

◀ all product details on DIRAK.com

DST Hinge Pr01 200°

[4-340DST]

Advantages

- For nested doors.
- Hinge visible.
- RH / LH application.
- 200° Opening angle.
- Frame-part with DIRAK-SNAP-Technology.
- Door-part with countersunk holes for screw-on.
- With PA bushings.

Materials

- **Frame- and door-part:** zinc die, black
- **Loose/ fixed pin and washers:** stainless steel
- **Bushings:** PA, natural
- **Snap wedges:** sintered steel

Remarks

1. PA bushings

Further details and dimensions see product system 4-340.

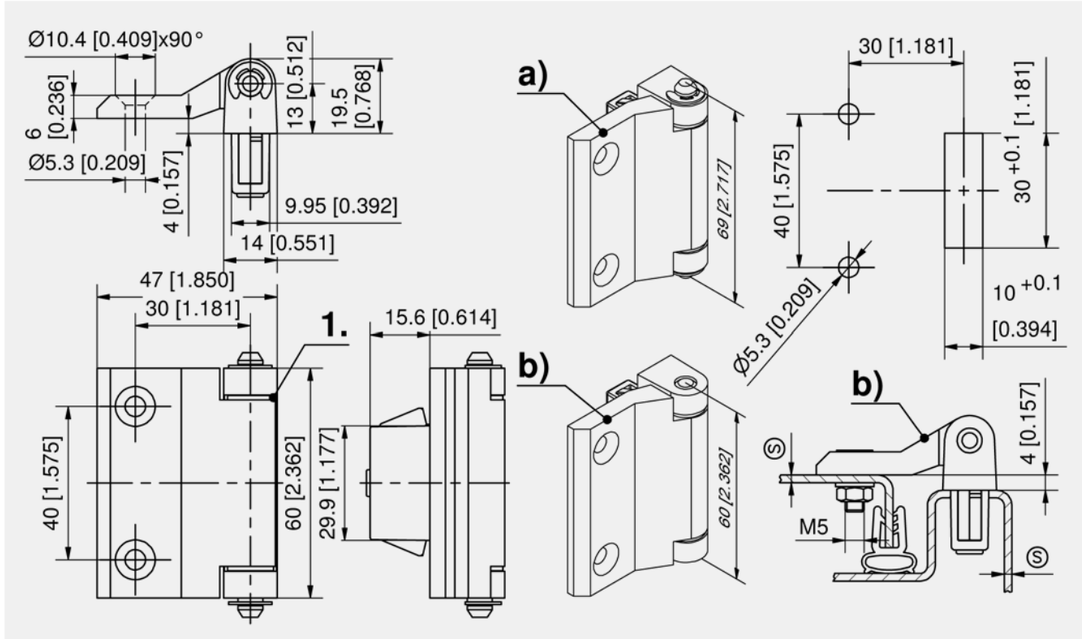

Hinge

	Part Number	Clamping range (S)	Pin length L	Pin version	Installation type	Delivery Unit
a)	417-9106.00-00015	1.2 - 1.7 mm	69 mm	with groove incl. locking washer DIN6799	tool-less / screw-on	10 pcs.
a)	417-9106.00-00020	1.7 - 2.2 mm	69 mm	with groove incl. locking washer DIN6799	tool-less / screw-on	10 pcs.
a)	417-9106.00-00025	2.2 - 2.7 mm	69 mm	with groove incl. locking washer DIN6799	tool-less / screw-on	10 pcs.
a)	417-9106.00-00030	2.7 - 3.2 mm	69 mm	with groove incl. locking washer DIN6799	tool-less / screw-on	10 pcs.
b)	417-9109.00-00015	1.2 - 1.7 mm	60 mm	pressed in	tool-less / screw-on	10 pcs.
b)	417-9109.00-00020	1.7 - 2.2 mm	60 mm	pressed in	tool-less / screw-on	10 pcs.
b)	417-9109.00-00025	2.2 - 2.7 mm	60 mm	pressed in	tool-less / screw-on	10 pcs.
b)	417-9109.00-00030	2.7 - 3.2 mm	60 mm	pressed in	tool-less / screw-on	10 pcs.

	Accessories
764	292-0306.80-02530 **Tool for uninstallation**
762	292-0401.00-03010 **Cutout-cover**
763	292-0702.15-01030 **Reinforcement plate for cutout**

all product details ▶ on DIRAK.com

4-340DST

Hinge Pr01 180°

[4-355]

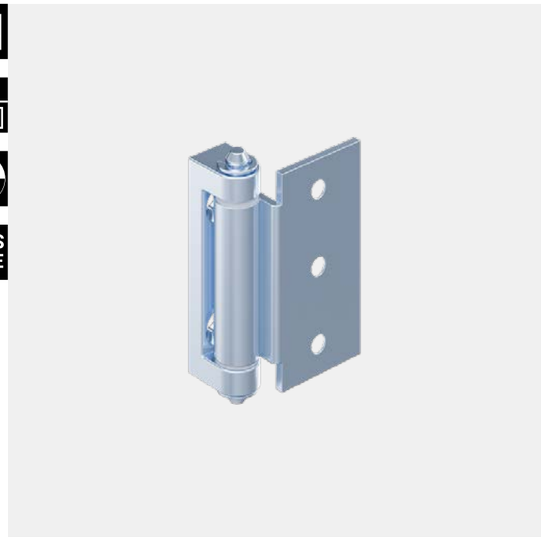

Advantages

- Screw-on hinge for device doors.
- For nested doors.
- Hinge visible.
- RH / LH application.
- 180° Opening angle.
- With PA bushings.

Materials

- **Frame-part:** zinc die, zinc plated
- **Door-part and pin:** steel, zinc plated
- **Bushings:** PA, natural

Remarks

Delivery unassembled

1. PA-bushings

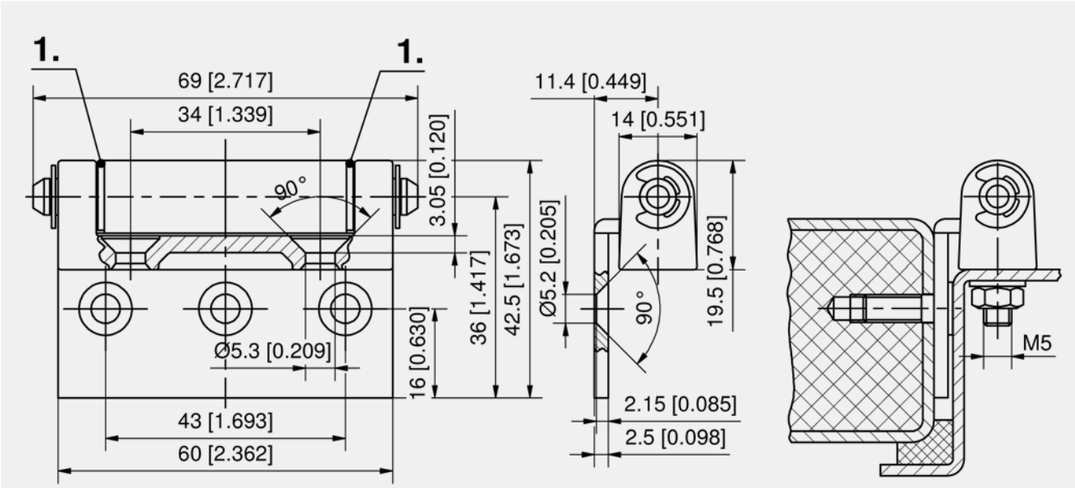

Hinge

Part Number	Pin version	Installation type	Delivery Unit
217-9501.00-00000	with groove incl. locking washer DIN6799	screw-on	10 pcs.

all product details on DIRAK.com
4-355

DST Hinge Pr01 180°

[4-355DST]

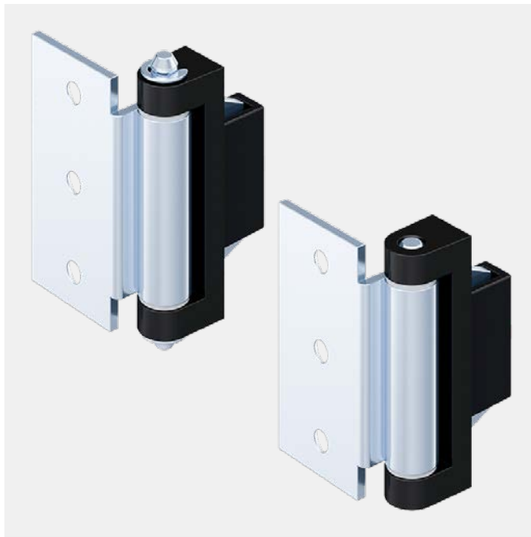

Advantages

- Hinge with DIRAK-SNAP-Technology for appliance doors.
- For nested doors.
- Hinge visible.
- RH / LH application.
- 180° Opening angle.
- Tool-less installation of frame-part.
- Door-part with countersunk holes for screws M5.

Materials

- **Frame- and door-part:** zinc die, black
- **Loose pin and washers:** steel, zinc plated
- **Fixed pin:** stainless steel
- **Bushings:** PA, natural
- **Snap wedges:** sintered metal, coated

Remarks

1. PA-bushings

Further details and dimensions see product system 4-355.

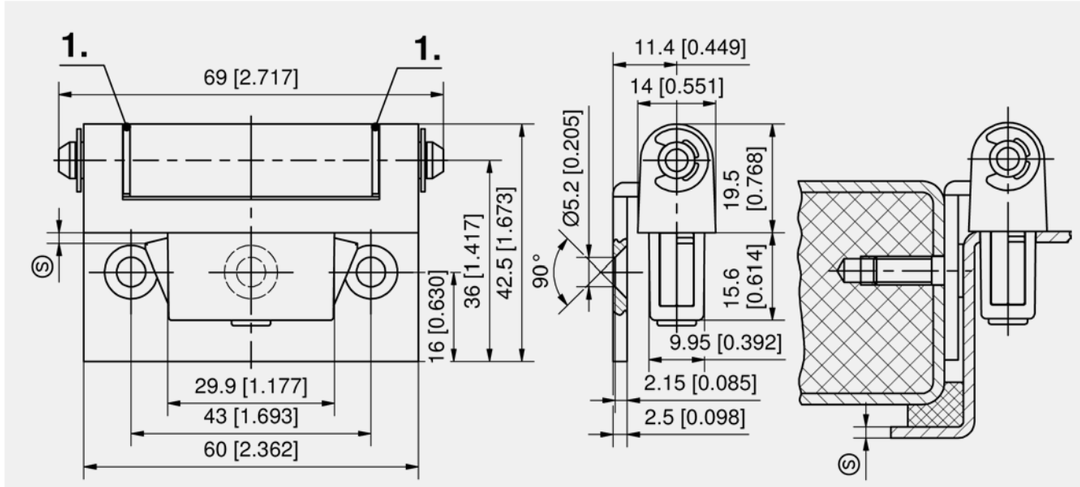

Hinge

Part Number	Clamping range (S)	Pin length L	Material pin	Pin version	Installation type	Delivery Unit
417-9103.00-00015	1.2 - 1.7 mm	69 mm	steel, zinc plated	with groove incl. locking washer DIN6799	tool-less / screw-on	10 pcs.
417-9103.00-00020	1.7 - 2.2 mm	69 mm	steel, zinc plated	with groove incl. locking washer DIN6799	tool-less / screw-on	10 pcs.
417-9103.00-00025	2.2 - 2.7 mm	69 mm	steel, zinc plated	with groove incl. locking washer DIN6799	tool-less / screw-on	10 pcs.
417-9103.00-00030	2.7 - 3.2 mm	69 mm	steel, zinc plated	with groove incl. locking washer DIN6799	tool-less / screw-on	10 pcs.
417-9108.00-00015	1.2 - 1.7 mm	60 mm	stainless steel	pressed in	tool-less / screw-on	10 pcs.
417-9108.00-00020	1.7 - 2.2 mm	60 mm	stainless steel	pressed in	tool-less / screw-on	10 pcs.
417-9108.00-00025	2.2 - 2.7 mm	60 mm	stainless steel	pressed in	tool-less / screw-on	10 pcs.
417-9108.00-00030	2.7 - 3.2 mm	60 mm	stainless steel	pressed in	tool-less / screw-on	10 pcs.

	Accessories
764	292-0306.80-02530 **Tool for uninstallation**
762	292-0401.00-03010 **Cutout-cover**
763	292-0702.15-01030 **Reinforcement plate for cutout**

all product details on DIRAK.com
4-355DST

Hinge, adjustable Pr01 180° Stainless Steel

[7-225]

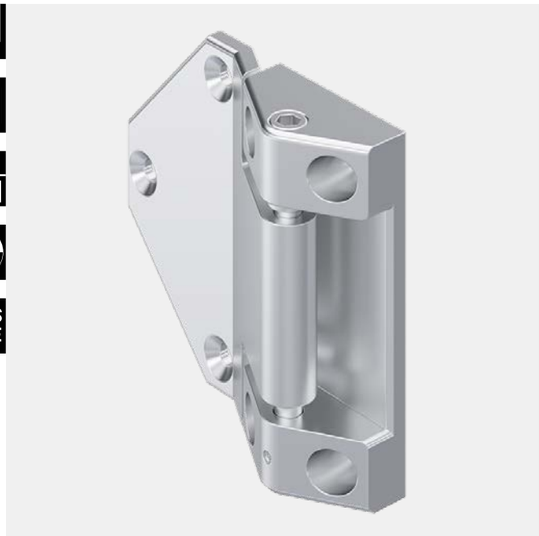

Advantages

- Adjustable in height ± 4mm.
- For nested doors.
- Hinge visible.
- 180° Opening angle.
- RH / LH application.

Materials

- **Hinge:** AISI 316, satin polished

Remarks

1. adjustable axis, wrench size 6
2. fixing of adjustable axis stud M4, DIN 916 SW2

Properties of material AISI 316 Ti: the titanium increases the corrosion resistance even further, particularly the inter-crystalline corrosion at the grain boundaries.

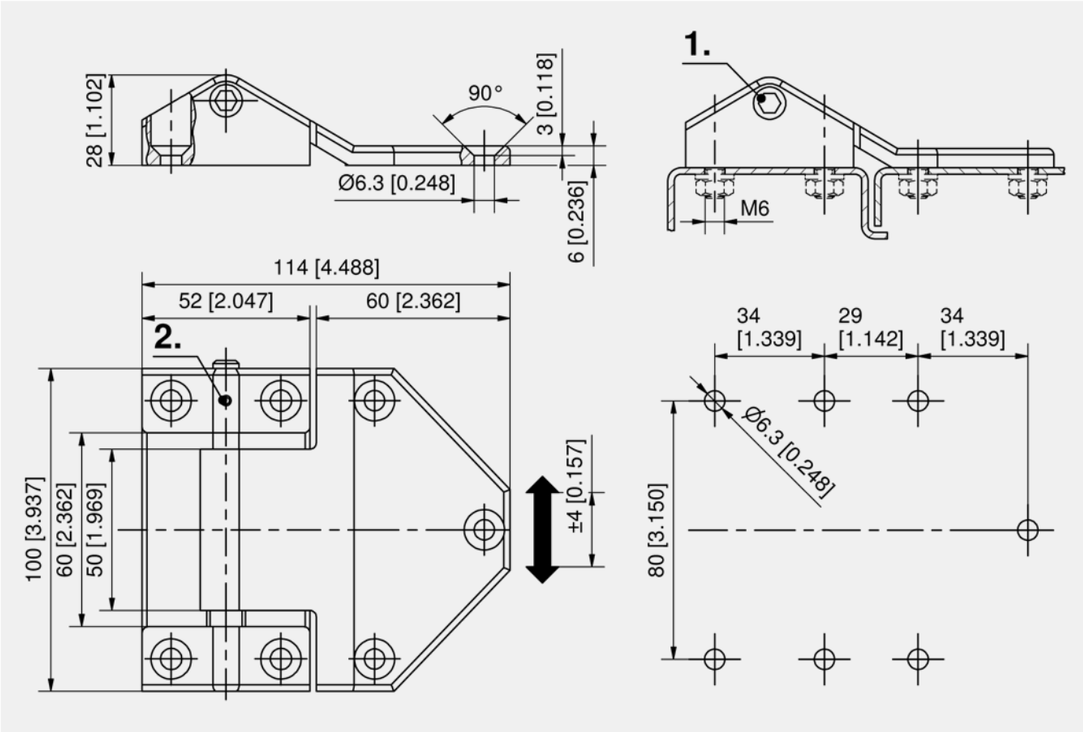

Hinge, adjustable

Part Number	Width W	Height H	Pin version	Installation type	Delivery Unit
217-9605.00-00000	114 mm	100 mm	screwed	screw-on	1 pc.

7-225
all product details on DIRAK.com

Hinge Pr01/04 180°

[4-345]

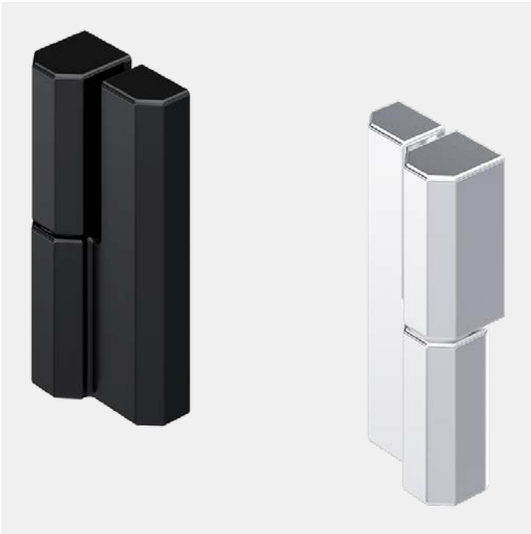

Advantages

- For nested or surface mounted doors.
- Hinge visible.
- RH and LH version.
- 180° Opening angle.
- Screw-on.
- The installation screws are concealed.
- Lift-off.

Materials

- **Hinge:** zinc die, glossy chrome plated or black
- **Pin cast-on:** zinc die
- **Spacer:** Teflon, black or white

Remarks

1. spacer
2. example of application nested door - 180° opening angle
3. example of application surface mounted door - 135° opening angle

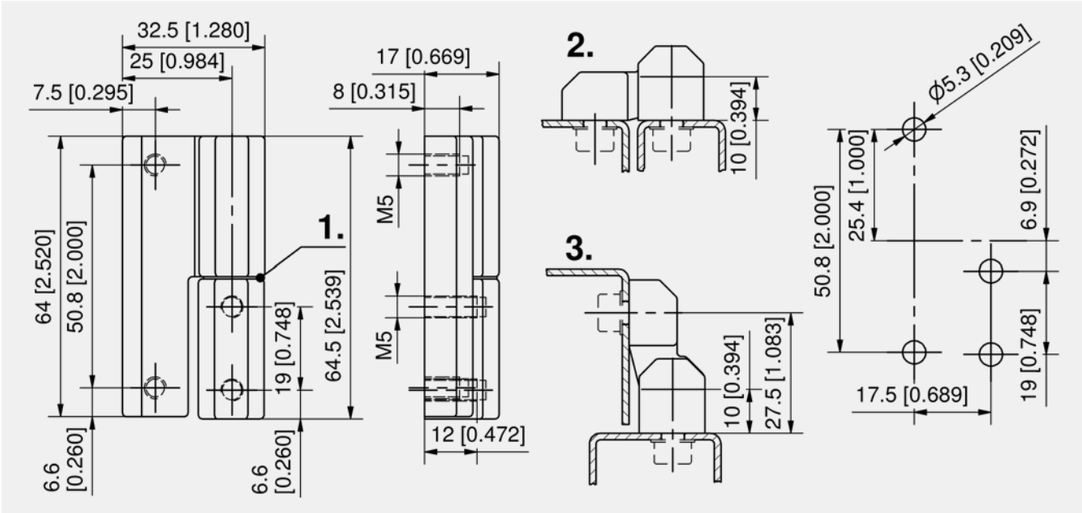

Hinge, zinc die

Part Number	Surface	Version	Pin version	Installation type	Delivery Unit
217-9503.00-00000	black	RH version	cast-on	screw-on	10 pcs.
217-9504.00-00000	black	LH version	cast-on	screw-on	10 pcs.
217-9505.00-00000	glossy chrome plated	RH version	cast-on	screw-on	10 pcs.
217-9506.00-00000	glossy chrome plated	LH version	cast-on	screw-on	10 pcs.

all product details on DIRAK.com
4-345

DST Hinge Pr01/04 180°

[4-345DST]

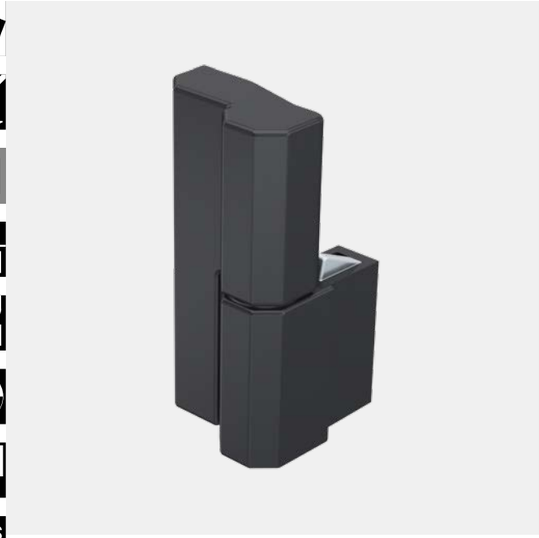

Advantages

- For nested or surface mounted doors.
- Hinge visible.
- With DIRAK-SNAP-Technology.
- RH and LH version.
- 180° Opening angle.
- Lift-off.
- Although designed initially for flush constructions, this hinge can also be used for surface mounted doors (refer to example of application 3.).
- The installation of the frame-part and door-part is tool-less, achieved by a simple push into the appropriate cutouts.
- Version with pressed in pin for high loads.

Materials

- **Hinge-parts:** zinc die, matt black
- **Pin cast-on:** zinc die
- **For heavy duty, solid pin, pressed in:** stainless steel
- **Spacer:** Teflon, black
- **Snap wedges:** sintered steel

Remarks

Attention: The angle is only 130° for surface-mounted applications. See product system 4-346DST.

1. spacer

2. example of application nested door

3. example of application surface mounted door

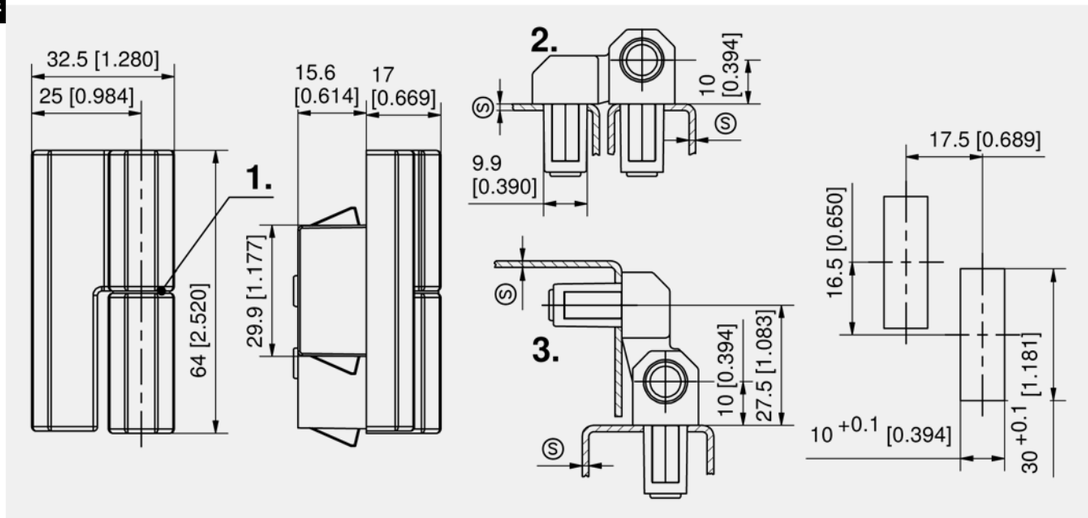

Hinge

Part Number	Clamping range (S)	Version	Material pin	Pin version	Installation type	Delivery Unit
417-9005.00-00010	0.7 - 1.2 mm	RH version	zinc die	cast-on	tool-less	10 pcs.
417-9005.00-00015	1.2 - 1.7 mm	RH version	zinc die	cast-on	tool-less	10 pcs.
417-9005.00-00020	1.7 - 2.2 mm	RH version	zinc die	cast-on	tool-less	10 pcs.
417-9005.00-00030	2.7 - 3.2 mm	RH version	zinc die	cast-on	tool-less	10 pcs.
417-9011.00-00010	0.7 - 1.2 mm	RH version	stainless steel	pressed in	tool-less	10 pcs.
417-9011.00-00015	1.2 - 1.7 mm	RH version	stainless steel	pressed in	tool-less	10 pcs.
417-9011.00-00020	1.7 - 2.2 mm	RH version	stainless steel	pressed in	tool-less	10 pcs.
417-9011.00-00030	2.7 - 3.2 mm	RH version	stainless steel	pressed in	tool-less	10 pcs.
417-9006.00-00010	0.7 - 1.2 mm	LH version	zinc die	cast-on	tool-less	10 pcs.
417-9006.00-00015	1.2 - 1.7 mm	LH version	zinc die	cast-on	tool-less	10 pcs.
417-9006.00-00020	1.7 - 2.2 mm	LH version	zinc die	cast-on	tool-less	10 pcs.
417-9006.00-00030	2.7 - 3.2 mm	LH version	zinc die	cast-on	tool-less	10 pcs.
417-9010.00-00010	0.7 - 1.2 mm	LH version	stainless steel	pressed in	tool-less	10 pcs.
417-9010.00-00015	1.2 - 1.7 mm	LH version	stainless steel	pressed in	tool-less	10 pcs.
417-9010.00-00020	1.7 - 2.2 mm	LH version	stainless steel	pressed in	tool-less	10 pcs.
417-9010.00-00030	2.7 - 3.2 mm	LH version	stainless steel	pressed in	tool-less	10 pcs.

Accessories
764 292-0306.80-02530 **Tool for uninstallation**
762 292-0401.00-03010 **Cutout-cover**

Accessories
763 292-0702.15-01030 **Reinforcement plate for cutout**

4-345DST

◂ all product details on DIRAK.com

Hinge Pr01 160°

[4-346]

Advantages

- For nested doors.
- Hinge visible.
- Lift-off.
- RH and LH version
- 160° Opening angle.
- The fitting screws are concealed.
- The 35mm screw-distance allows for easier fitting.

Materials

- **Hinge-parts:** zinc die, glossy chrome plated or black
- **Pin:** stainless steel
- **Spacer:** Teflon, black or white

Remarks

Spacer **1.** and 4 screws M5x8 with under head serrations **2.** are included.

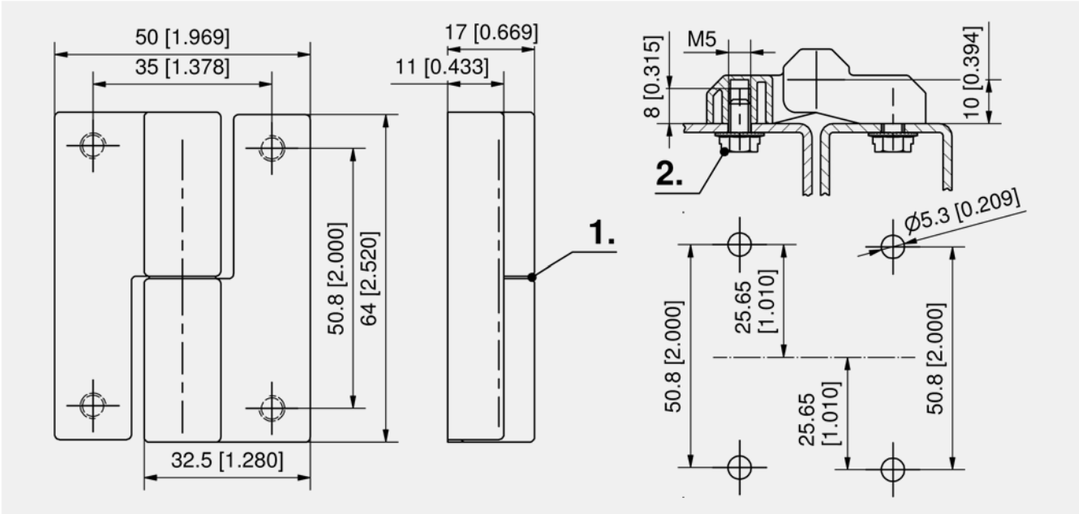

Hinge, zinc die

Part Number	Surface	Version	Pin version	Installation type	Delivery Unit
217-9507.00-00000	glossy chrome plated	RH version	pressed in	screw-on	10 pcs.
217-9508.00-00000	glossy chrome plated	LH version	pressed in	screw-on	10 pcs.
217-9509.00-00000	black	RH version	pressed in	screw-on	10 pcs.
217-9510.00-00000	black	LH version	pressed in	screw-on	10 pcs.

all product details ▸ on DIRAK.com

4-346

DST Hinge Pr01 160°

[4-346DST]

Advantages

- For nested doors.
- Hinge visible.
- RH and LH version.
- 160° Opening angle.
- With DIRAK-SNAP-Technology.
- Lift-off.
- The installation of the frame-part and door-part is tool-less, achieved by a simple push into the appropriate cutouts.

Materials

- **Hinge-parts:** zinc die, matte black
- **Solid pin, pressed in:** stainless steel
- **Spacer:** Teflon, black
- **Snap wedges:** sintered steel, zinc plated

Remarks

1. spacer

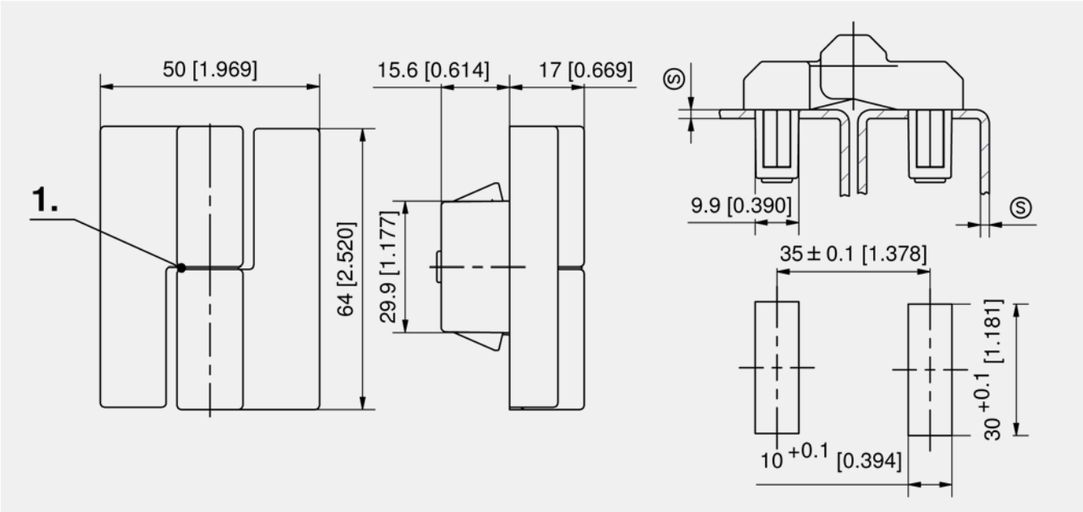

Hinge

Part Number	Clamping range (S)	Version	Pin version	Installation type	Delivery Unit
417-9007.00-00010	0.7 - 1.2 mm	RH version	pressed in	tool-less	10 pcs.
417-9007.00-00015	1.2 - 1.7 mm	RH version	pressed in	tool-less	10 pcs.
417-9007.00-00020	1.7 - 2.2 mm	RH version	pressed in	tool-less	10 pcs.
417-9007.00-00030	2.7 - 3.2 mm	RH version	pressed in	tool-less	10 pcs.
417-9008.00-00010	0.7 - 1.2 mm	LH version	pressed in	tool-less	10 pcs.
417-9008.00-00015	1.2 - 1.7 mm	LH version	pressed in	tool-less	10 pcs.
417-9008.00-00020	1.7 - 2.2 mm	LH version	pressed in	tool-less	10 pcs.
417-9008.00-00030	2.7 - 3.2 mm	LH version	pressed in	tool-less	10 pcs.

	Accessories
764	292-0306.80-02530 **Tool for uninstallation**
762	292-0401.00-03010 **Cutout-cover**
763	292-0702.15-01030 **Reinforcement plate for cutout**

4-346DST

◂ all product details on DIRAK.com

2D Hinge, adjustable Pr01 180°

[4-351]

Advantages

- Adjustable in: height ±2 mm/ width ±2 mm.
- Pin in blind hole secured against knock out.
- For nested doors.
- Hinge visible.
- 180° Opening angle.
- RH and LH version.

Materials

- **Frame- and door-part**: Aluminium, black
- **Bushings:** PA, natur
- **Pin:** Steel, zinc plated
- **Cover:** PA, black

Remarks

1. PA bushings

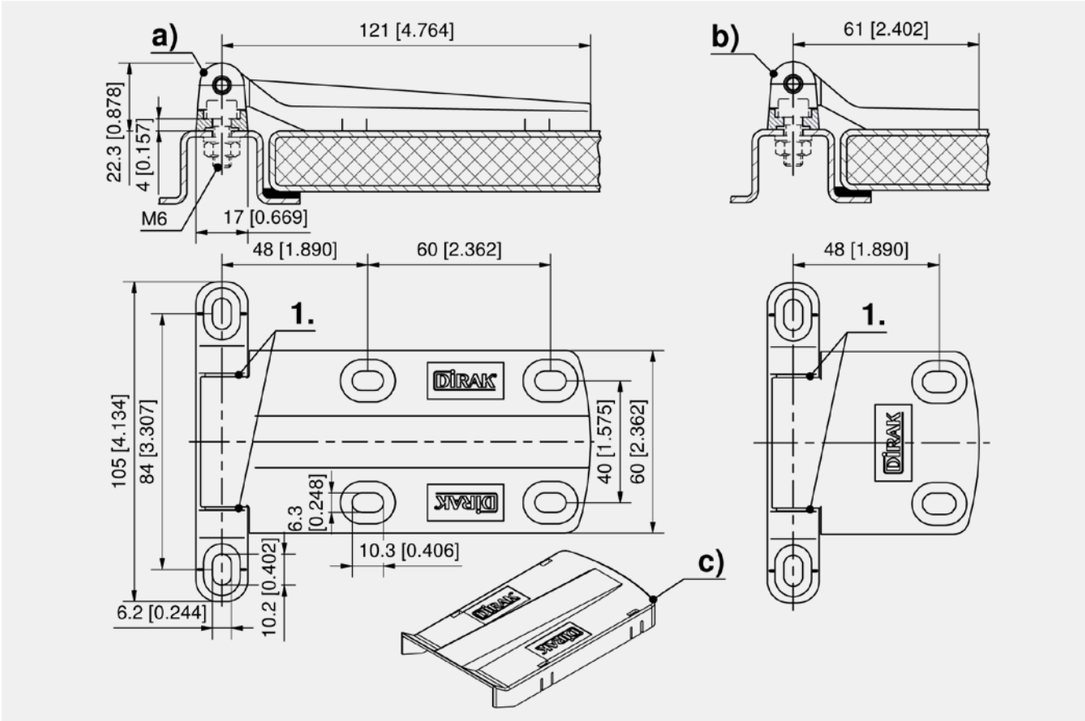

2D hinge

	Part Number	Version	Variant	Pin version	Installation type	Delivery Unit
a)	217-9414.00-00000	RH version	long version	pressed in	screw-on	10 pcs.
a)	217-9415.00-00000	LH version	long version	pressed in	screw-on	10 pcs.
b)	217-9416.00-00000	RH version	short version	pressed in	screw-on	10 pcs.
b)	217-9417.00-00000	LH version	short version	pressed in	screw-on	10 pcs.

Cap

	Part Number	Version	Delivery Unit
c)	217-1301.52-07500	for hinge long version	10 pcs.

all product details ▸ on DIRAK.com

4-351

3D Hinge, adjustable Pr01 180°

[4-350]

Advantages

- Adjustable in: height ±2mm (0.079) / width ±2mm (0.079) / depth ±2mm (0.079)
- For nested doors.
- Hinge visible.
- 180° Opening angle.
- RH and LH version.
- Version not assembled for RH and LH application.

Materials

- **Frame- and door-part:** zinc die, untreated or black
- **Base plate:** steel, zinc plated or black
- **Bushings:** PA, natural
- **Pin:** brass, untreated or AISI 303
- **Washers:** AISI 304

Remarks

1. pressure screw for depth adjustment
2. locking of the adjustable brass axle
3. PA bushings
4. base plate has 4 holes Ø4.1 for possible additional fastening at the door leaf

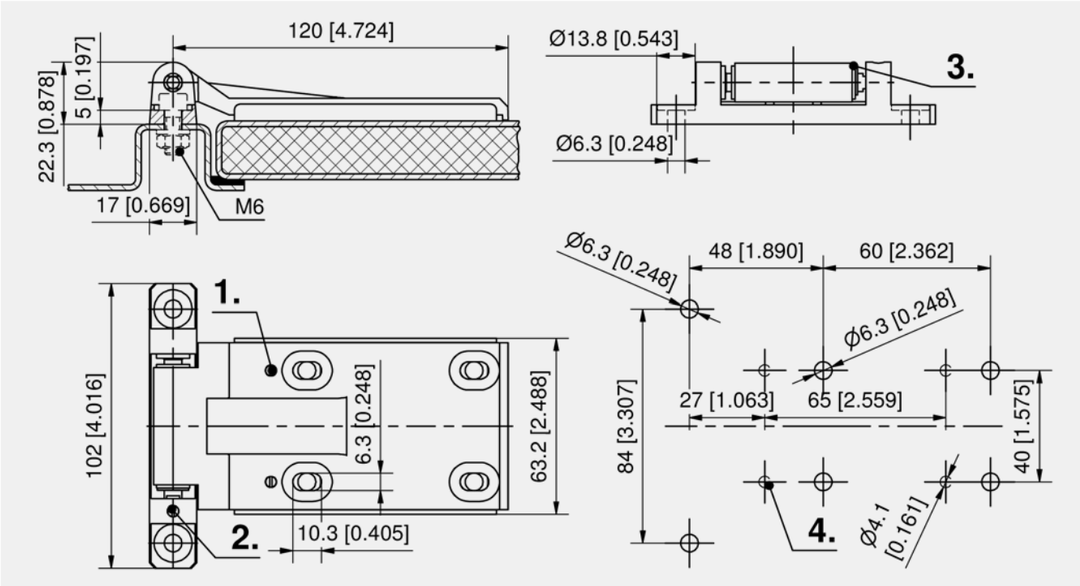

3D hinge

Part Number	Base plate	Version	Surface	Material pin	Pin version	Installation type	Delivery Unit
217-9402.00-00000	steel, zinc plated	RH version	untreated	brass	screwed	screw-on	10 pcs.
217-9403.00-00000	steel, zinc plated	LH version	untreated	brass	screwed	screw-on	10 pcs.
217-9404.00-00000	steel, zinc plated	not assembled	untreated	brass	screwed	screw-on	10 pcs.
217-9408.00-00000	steel, black	RH version	untreated	AISI 303	screwed	screw-on	10 pcs.
217-9409.00-00000	steel, black	LH version	untreated	AISI 303	screwed	screw-on	10 pcs.
217-9410.00-00000	steel, black	not assembled	untreated	AISI 303	screwed	screw-on	10 pcs.
217-9405.00-00000	steel, zinc plated	RH version	black	brass	screwed	screw-on	10 pcs.
217-9406.00-00000	steel, zinc plated	LH version	black	brass	screwed	screw-on	10 pcs.
217-9407.00-00000	steel, zinc plated	not assembled	black	brass	screwed	screw-on	10 pcs.
217-9411.00-00000	steel, black	RH version	black	AISI 303	screwed	screw-on	10 pcs.
217-9412.00-00000	steel, black	LH version	black	AISI 303	screwed	screw-on	10 pcs.
217-9413.00-00000	steel, black	not assembled	black	AISI 303	screwed	screw-on	10 pcs.

4-350
all product details on DIRAK.com

DST 3D Hinge, adjustable Pr01 180°

[4-350DST]

Advantages

- 3D hinge with DIRAK-SNAP-Technology.
- Adjustable in: height ±2mm / width ±2mm / depth ±2mm.
- For nested doors.
- Hinge visible.
- 180° Opening angle.
- RH and LH version.
- The installation of the frame part is tool-less, achieved by a simple push into the appropriate cutouts.

Materials

- **Frame- and door-part:** zinc die, black
- **Base-plate:** steel, zinc plated
- **Pin:** brass, untreated, stainless steel on request
- **Snap wedges:** sintered metal, coated
- **Bushings:** PA, natural
- **Studs, bearing washer and c-clips:** stainless steel

Remarks

1. pushing screw for depth adjusting
2. securing screw for adjustable brass pin
3. PA bushing
4. base plate has 4 holes Ø4.1 for possible additional fastening at the door.

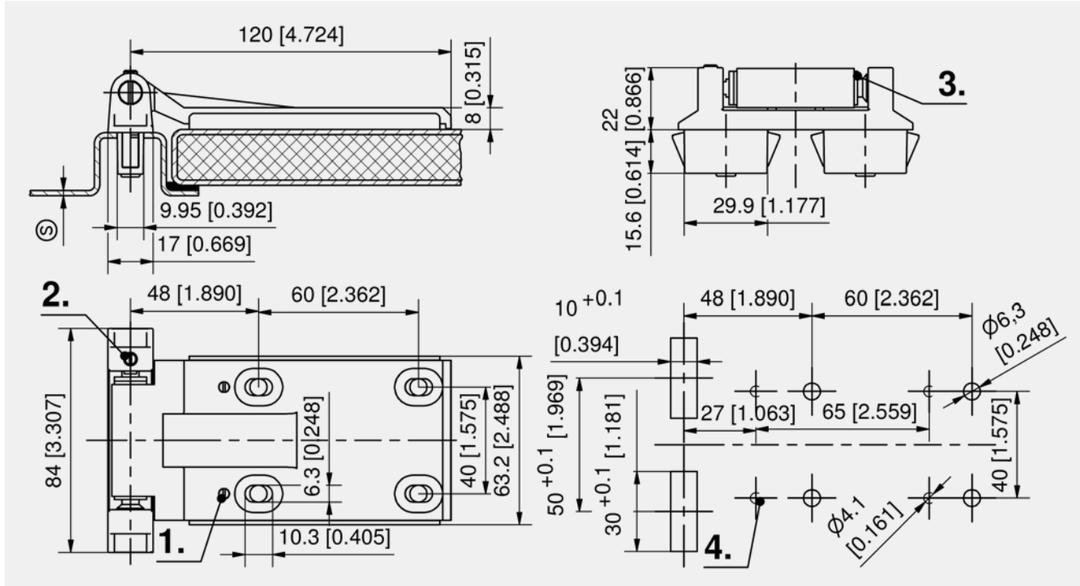

3D hinge

Part Number	Clamping range (S)	Version	Pin version	Installation type	Delivery Unit
417-9002.00-00015	1.2 - 1.7 mm	RH version	screwed	tool-less / screw-on	10 pcs.
417-9002.00-00020	1.7 - 2.2 mm	RH version	screwed	tool-less / screw-on	10 pcs.
417-9002.00-00025	2.2 - 2.7 mm	RH version	screwed	tool-less / screw-on	10 pcs.
417-9002.00-00030	2.7 - 3.2 mm	RH version	screwed	tool-less / screw-on	10 pcs.
417-9003.00-00015	1.2 - 1.7 mm	LH version	screwed	tool-less / screw-on	10 pcs.
417-9003.00-00020	1.7 - 2.2 mm	LH version	screwed	tool-less / screw-on	10 pcs.
417-9003.00-00025	2.2 - 2.7 mm	LH version	screwed	tool-less / screw-on	10 pcs.
417-9003.00-00030	2.7 - 3.2 mm	LH version	screwed	tool-less / screw-on	10 pcs.

	Accessories
764	292-0306.80-02530 **Tool for uninstallation**
762	292-0401.00-03010 **Cutout-cover**
763	292-0702.15-01030 **Reinforcement plate for cutout**

all product details on DIRAK.com
4-350DST

Hinge Pr01 180°

[4-194]

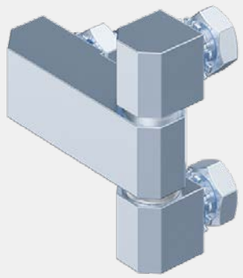

Advantages

- Screw-on hinge for flush door construction.
- For nested doors.
- Hinge visible.
- RH / LH application.
- 180° Opening angle.

Materials

- **Hinge halves, pin, stud, nuts and serrated washers :** steel, zinc plated
- **Washers:** brass, nickel plated

Remarks

M6 stud, 3 nuts and serrated washers are included.

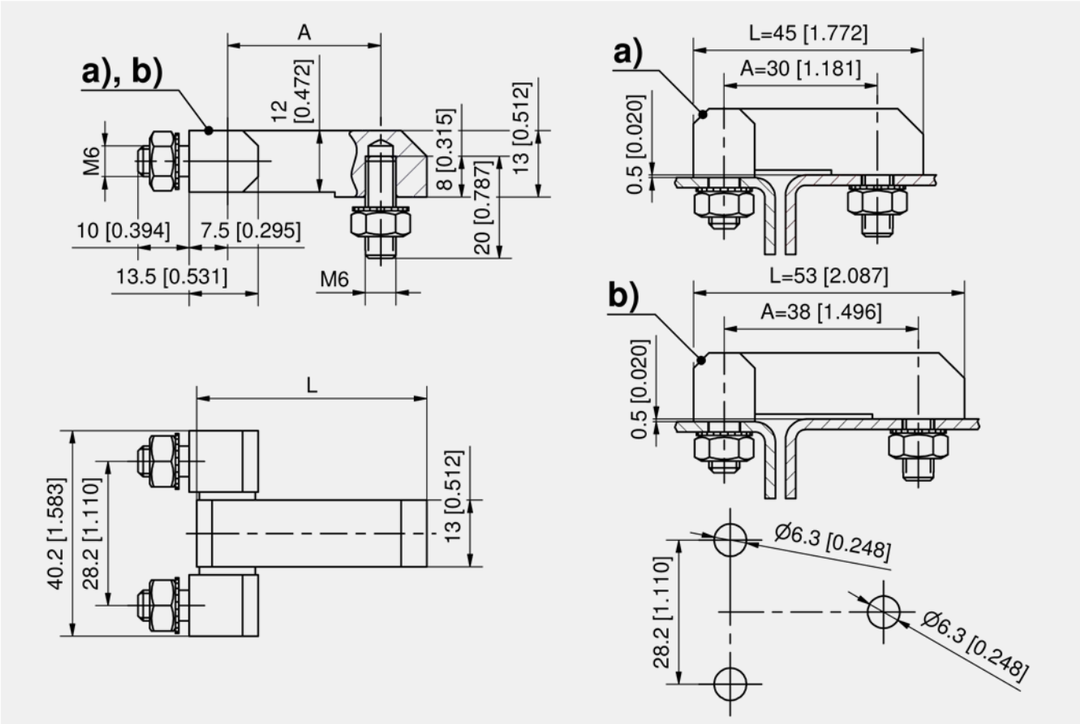

Hinge

	Part Number	A	L	Pin version	Installation type	Delivery Unit
a)	219-9003.00-00000	30 mm	45 mm	loose	screw-on	10 pcs.
b)	219-9004.00-00000	38 mm	53 mm	loose	screw-on	10 pcs.

4-194

◂ all product details on DIRAK.com

Hinge Pr01 180° Stainless Steel

[7-123]

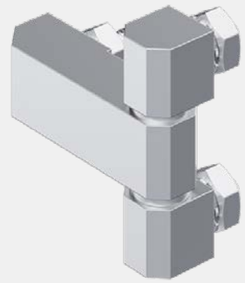

Advantages

- Screw-on hinge for flush door/ frame construction, light-weight version.
- For nested doors.
- Hinge visible.
- RH / LH application.
- 180° Opening angle.

Materials

- **Hinge:** AISI 303

Remarks

M6 stud, 3 nuts and serrated washers are included.

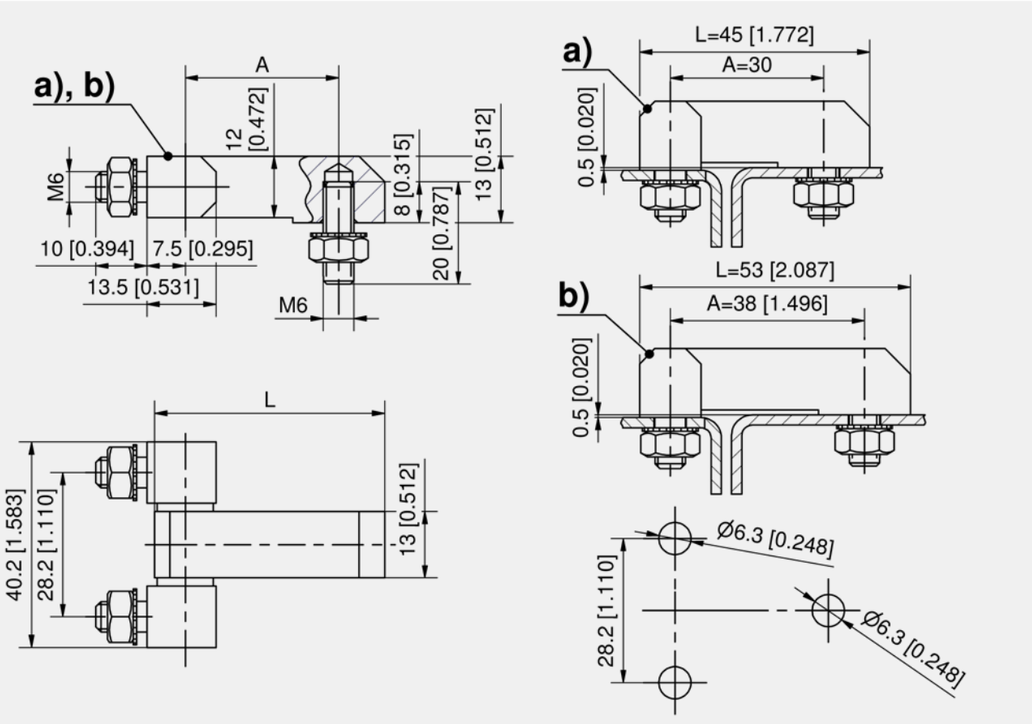

Hinge

	Part Number	A	L	Pin version	Installation type	Delivery Unit
a)	219-9006.00-00000	30 mm	45 mm	loose	screw-on	10 pcs.
b)	219-9007.00-00000	38 mm	53 mm	loose	screw-on	10 pcs.

all product details ▸ on DIRAK.com

7-123

Hinge Pr01 180°

[4-230]

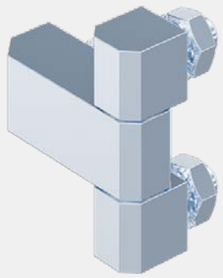

Advantages

- Screw-on hinge for flush door construction.
- For nested doors.
- Hinge visible.
- RH / LH application.
- 180° Opening angle.

Materials

- **Hinge halves, pin, stud, nuts and serrated washers :** steel, zinc plated
- **Washers:** brass, nickel plated

Remarks

1. washer

2. stud M8, 3 nuts and serrated washers are included.

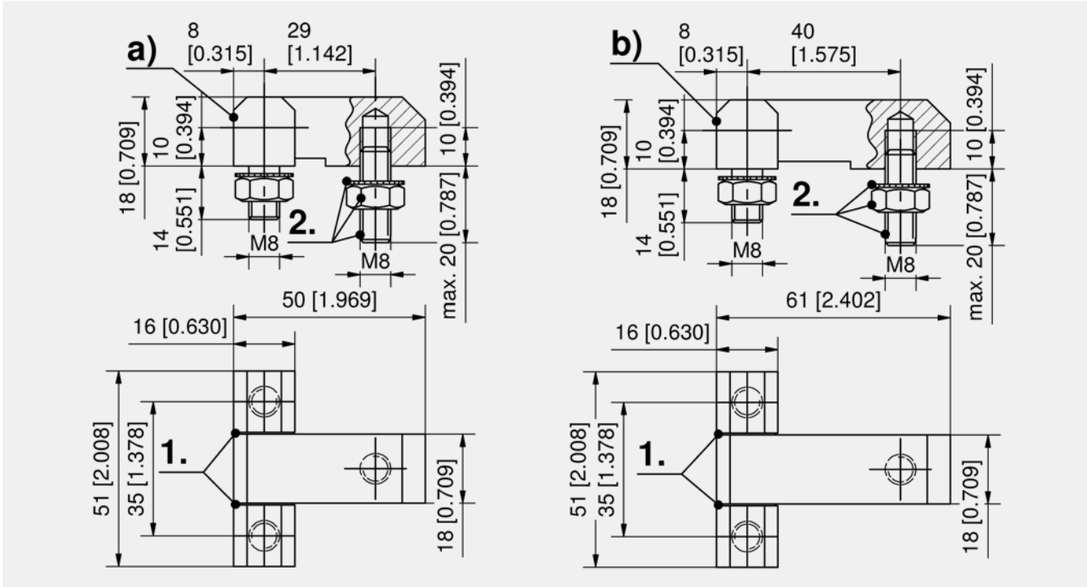

Hinge

	Part Number	Length	Pin version	Installation type	Delivery Unit
a)	219-9102.00-00000	50 mm	loose	screw-on	10 pcs.
b)	219-9103.00-00000	61 mm	loose	screw-on	10 pcs.

4-230
all product details on DIRAK.com

Hinge Pr01 180° Stainless Steel

[7-125]

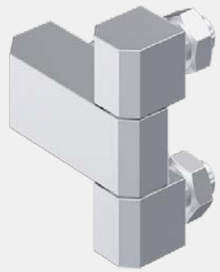

Advantages

- Screw-on hinge for flush door construction, heavy duty version.
- For nested doors.
- Hinge visible.
- RH / LH application.
- 180° Opening angle.

Materials

- **Hinge:** AISI 304

Remarks

Stud M8, 3 nuts and serrated washers are included.

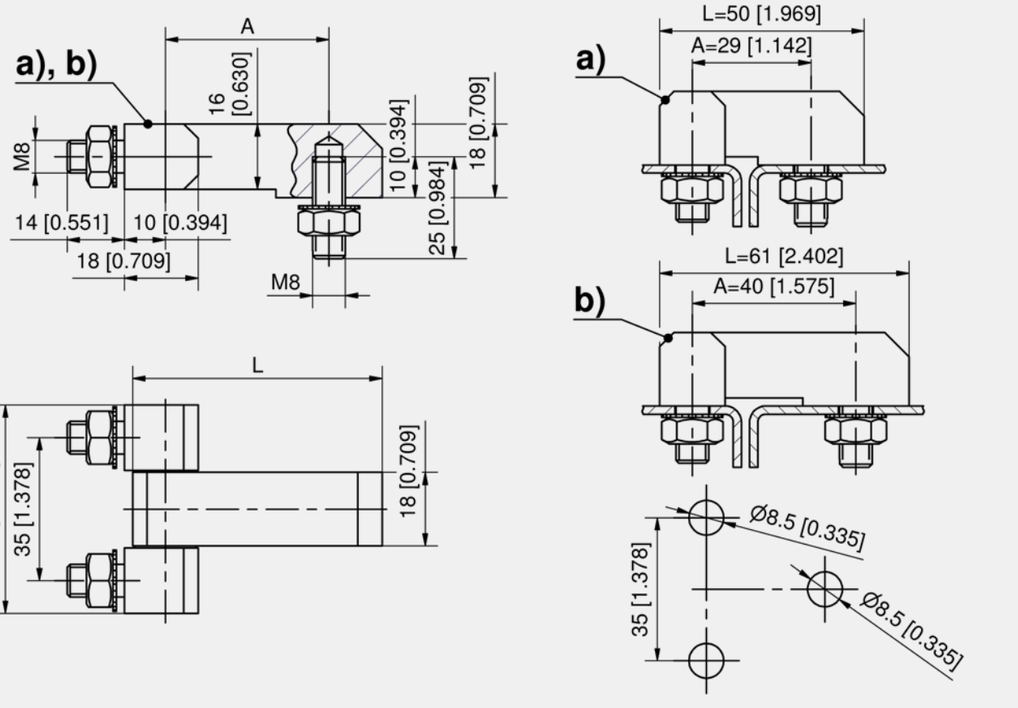

Hinge

	Part Number	A	L	Pin version	Installation type	Delivery Unit
a)	219-9107.00-00000	29 mm	50 mm	loose	screw-on	10 pcs.
b)	219-9108.00-00000	40 mm	61 mm	loose	screw-on	10 pcs.

all product details on DIRAK.com
7-125

Hinge Pr01 180°

[4-225]

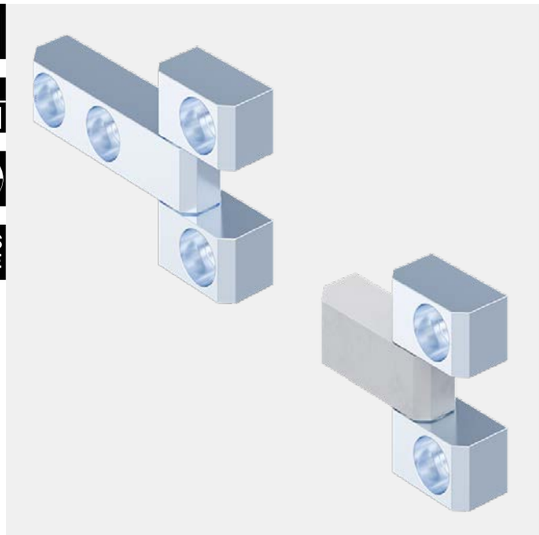

Advantages

- Screw-on / weld-on hinge.
- For nested doors.
- Hinge visible.
- RH / LH application.
- 180° Opening angle.

Materials

a) and b)

- **Door- and frame-part:** steel, zinc plated

c)

- **Door-part:** steel, untreated
- **Frame-part:** steel, zinc plated
- **Washer:** brass, nickel plated
- **Pin:** steel, nickel plated

Remarks

1. washer

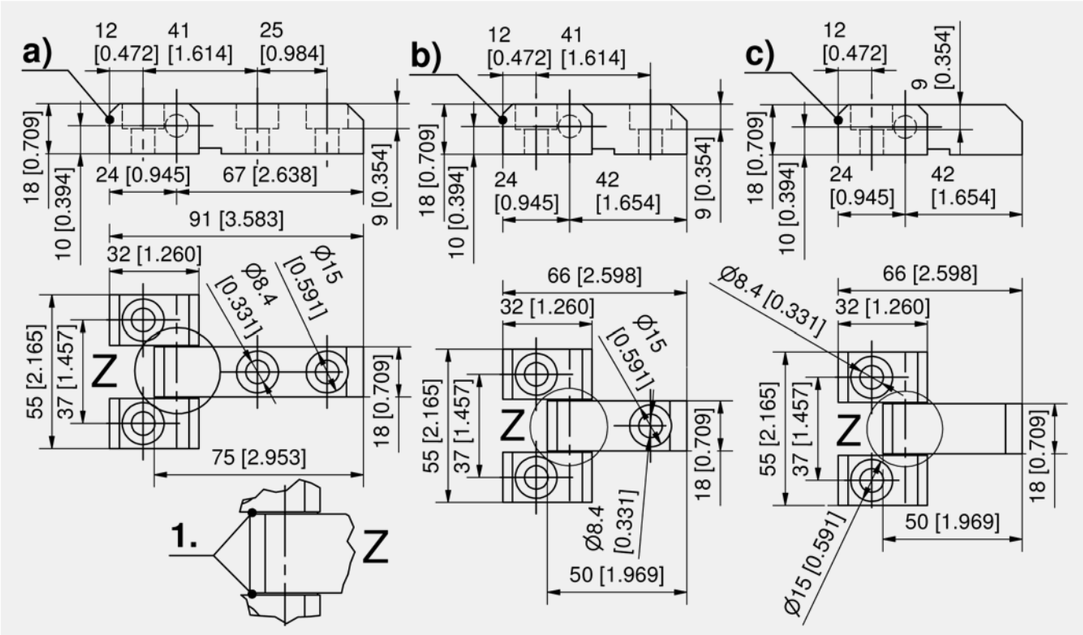

Hinge, middle-part long

	Part Number	Version	Pin version	Installation type	Delivery Unit
a)	219-9109.00-00000	with two countersunk holes Ø8.4mm	loose	screw-on	10 pcs.

Hinge, middle-part short

	Part Number	Version	Pin version	Installation type	Delivery Unit
b)	219-9113.00-00000	with one countersunk hole Ø8.4mm	loose	screw-on	10 pcs.
c)	219-9114.00-00000	without countersunk hole	loose	weld-on	10 pcs.

4-225
all product details on DIRAK.com

Hinge Pr01 180°

[4-240]

Advantages

- Hinge for flush door construction.
- For nested doors.
- Hinge visible.
- RH / LH application.
- 180° Opening angle.

Materials

- **Hinge:** zinc die, black
- **Pin and washer:** stainless steel

Remarks

1. washer

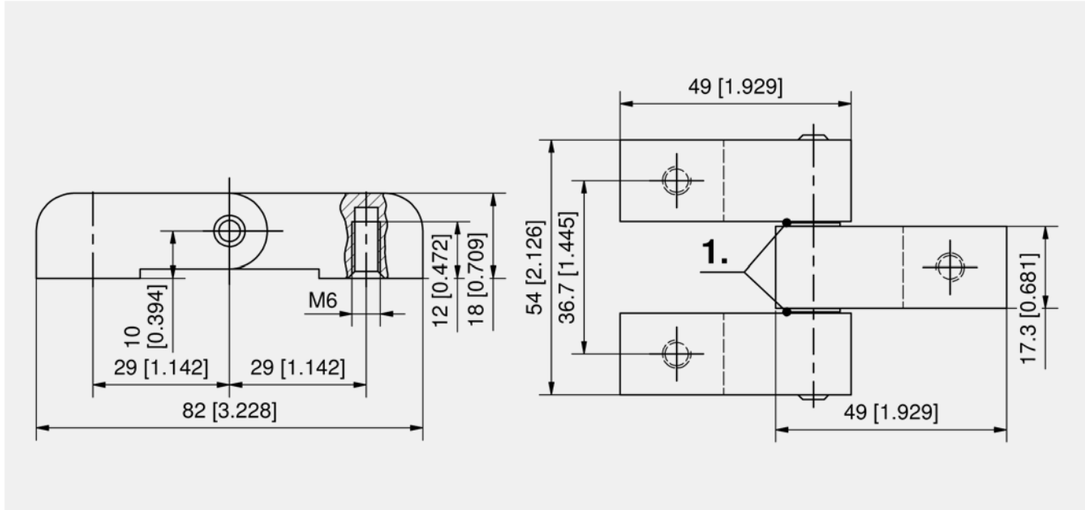

Hinge

Part Number	Pin version	Installation type	Delivery Unit
219-9104.00-00000	pressed in	screw-on	10 pcs.

all product details on DIRAK.com
4-240

Concealed Hinge Pr02 90°

[4-100]

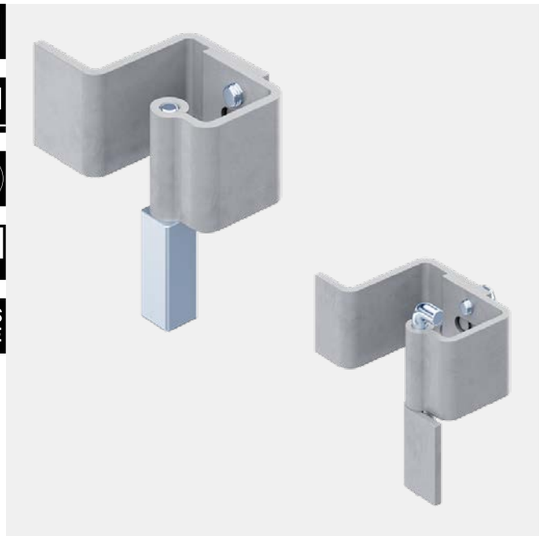

Advantages

- For nested doors.
- Hinge concealed.
- RH / LH application.
- 90° Opening angle.
- The 2 main hinge parts have a central guide to prevent door sagging.
- Horizontal adjustable.

Materials

- **Rolled frame-part:** steel, zinc plated
- **Z-part, hinge bolt, rolled door-part:** steel, untreated

Remarks

1. adjustable

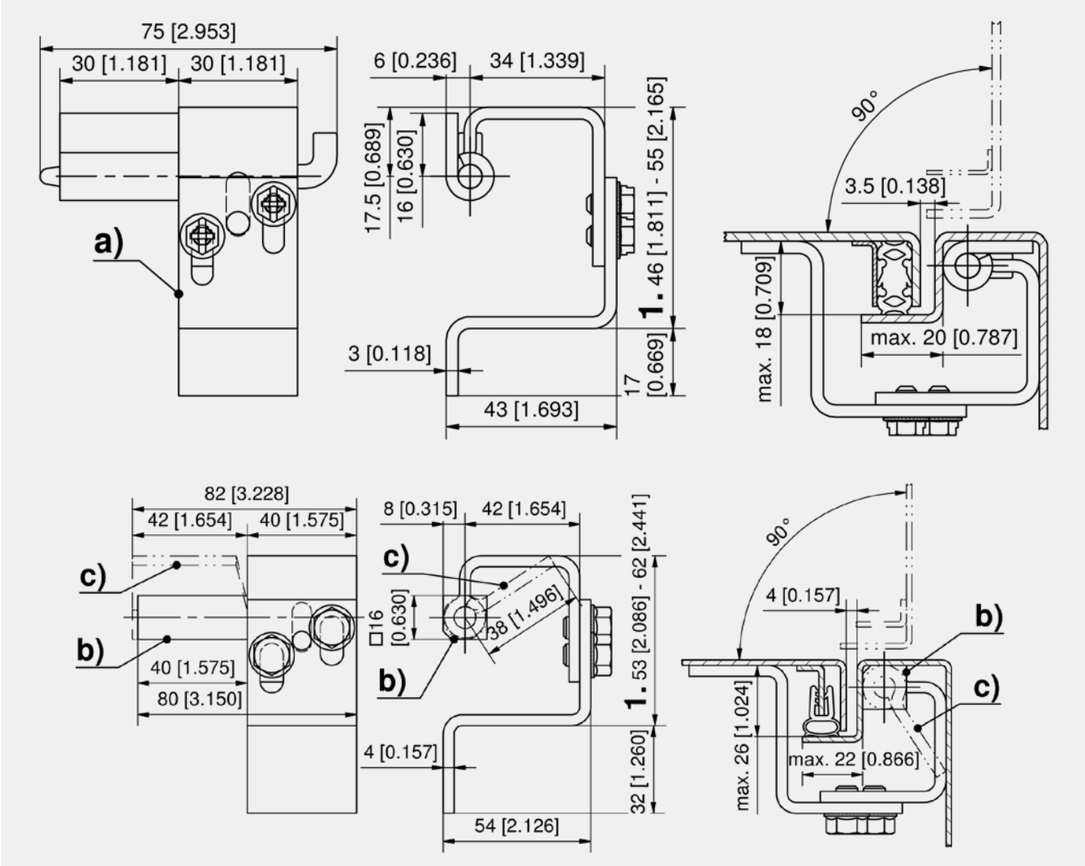

Concealed hinge

	Part Number	Pin version	Installation type	Delivery Unit
a)	222-9001.00-00000	loose	weld-on	1 pc.
b)	222-9101.00-00000	Pivot with □16	weld-on	1 pc.
c)	222-9103.00-00000	Pivot with flap	weld-on	1 pc.

◂ all product details on DIRAK.com
4-100

Concealed Hinge Pr02 90° Stainless Steel

[7-107]

Advantages

- For nested doors.
- Hinge concealed.
- RH / LH application.
- 90° Opening angle.
- The 2 main hinge parts have a central guide to prevent door sagging.
- Horizontal adjustable.

Materials

- **Hinge parts:** AISI 304

Remarks

1. adjustable

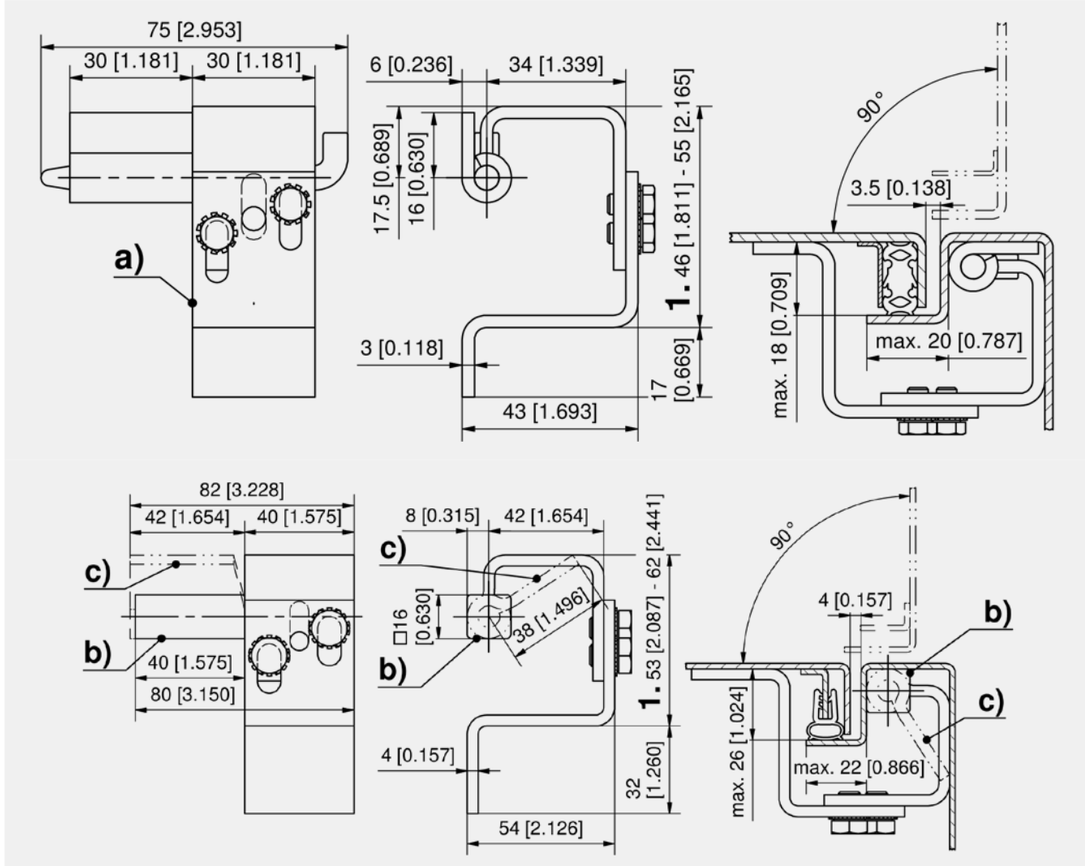

Concealed hinge

	Part Number	Pin version	Installation type	Delivery Unit
a)	222-9105.00-00000	loose	weld-on	1 pc.
b)	222-9102.00-00000	Pivot with □16	weld-on	1 pc.
c)	222-9104.00-00000	Pivot with flap	weld-on	1 pc.

all product details ▸ on DIRAK.com
7-107

Pin Hinge with spring-loaded Pin Pr02 110° [4-390]

Advantages

- Pin hinge with spring-loaded pin.
- For nested doors.
- Hinge concealed.
- RH / LH applications.
- 110° Opening angle.
- Lift-off.
- The barrel (steel, untreated) is welded-in.
- After the painting process, the slotted pivot pin, hooked pin and spring have to be assembled.

Materials

- **Bezel:** steel, untreated
- **Pin with slot and hook pin:** steel, zinc plated
- **Spring:** spring steel, galvanized

Remarks

1. pull the spring-loaded pin for installation and removal of the door
2. door fitted

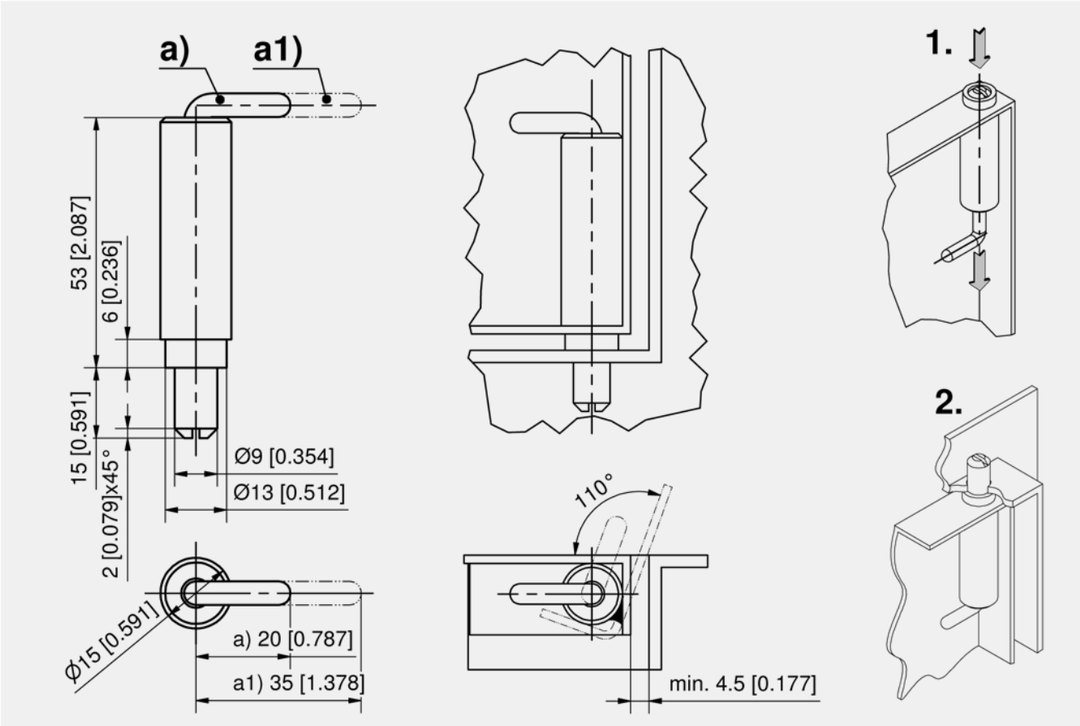

Pin hinge

	Part Number	Length	Pin version	Installation type	Delivery Unit
a)	241-9001.00-00000	20 mm	spring-loaded	weld-on	10 pcs.
a1)	241-9002.00-00000	35 mm	spring-loaded	weld-on	10 pcs.

Pin Hinge with spring-loaded Pin Pr02 110° St.-Steel [7-251]

Advantages

- Hinge with spring loaded pin for the removal of the door.
- For nested doors.
- Hinge concealed.
- RH / LH application.
- 110° Opening angle.
- Lift-off.
- The barrel is welded-in first.
- After the painting process, the slotted pivot pin, hooked pin and spring have to be assembled.

Materials

- **Bezel, pin and hook pin:** AISI 303
- **Spring:** AISI 301

Remarks

1. pull the spring-loaded pin for installation and removal of the door
2. door fitted

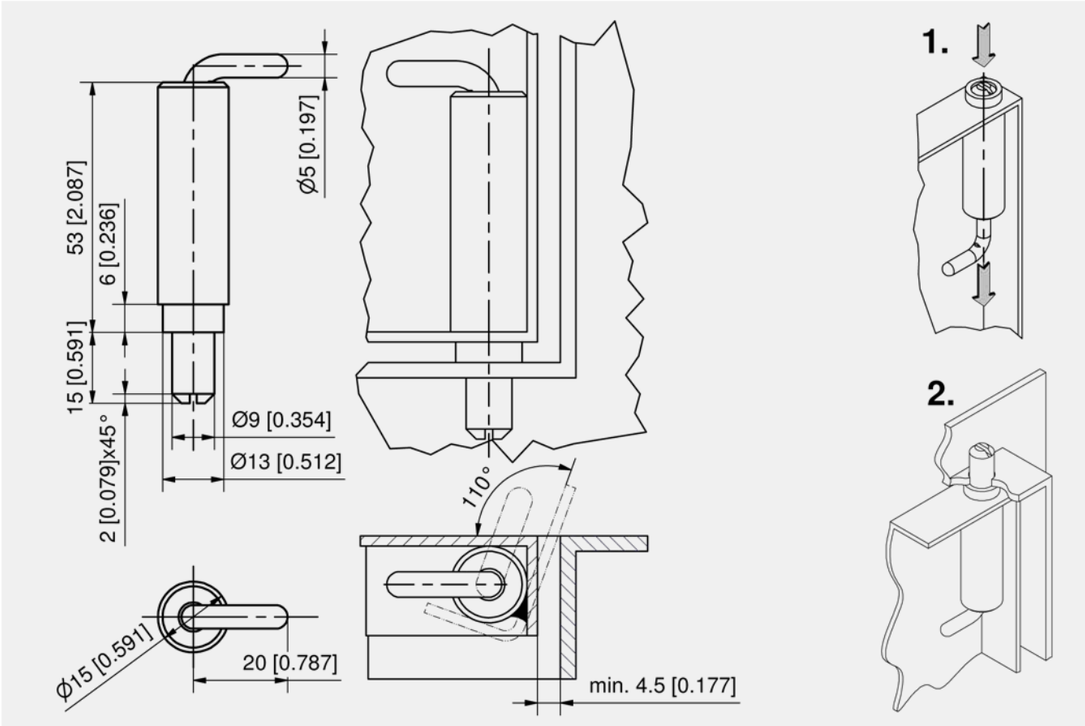

Pin hinge

Part Number	Length	Pin version	Installation type	Delivery Unit
241-9001.81-00000	20 mm	spring-loaded	weld-on	10 pcs.

Pin Hinge Pr02 120°

[4-392]

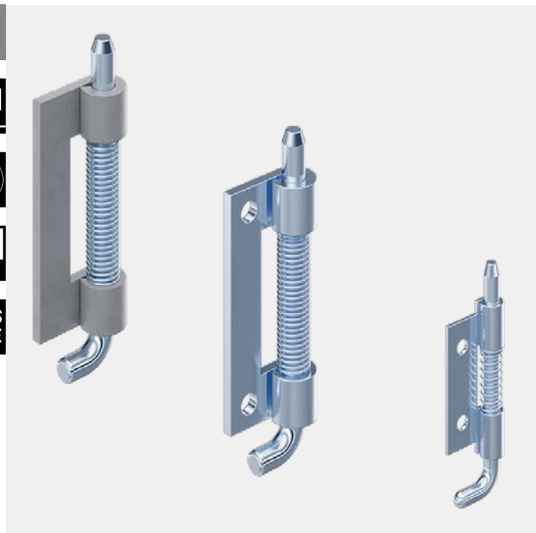

Advantages

- Hinge with spring-loaded pin.
- For nested doors.
- Hinge concealed.
- RH and LH version.
- 120° Opening angle.
- With springloaded pin for extension of the door.

Materials

- **Door-part:** steel, untreated or steel, zinc plated
- **Pin:** steel, zinc plated
- **Spring:** stainless steel

Remarks

Versions Ø5mm are just welded-on.

Versions Ø4mm and Ø6mm are welded-on and screwed-on.

Drawn is right version.

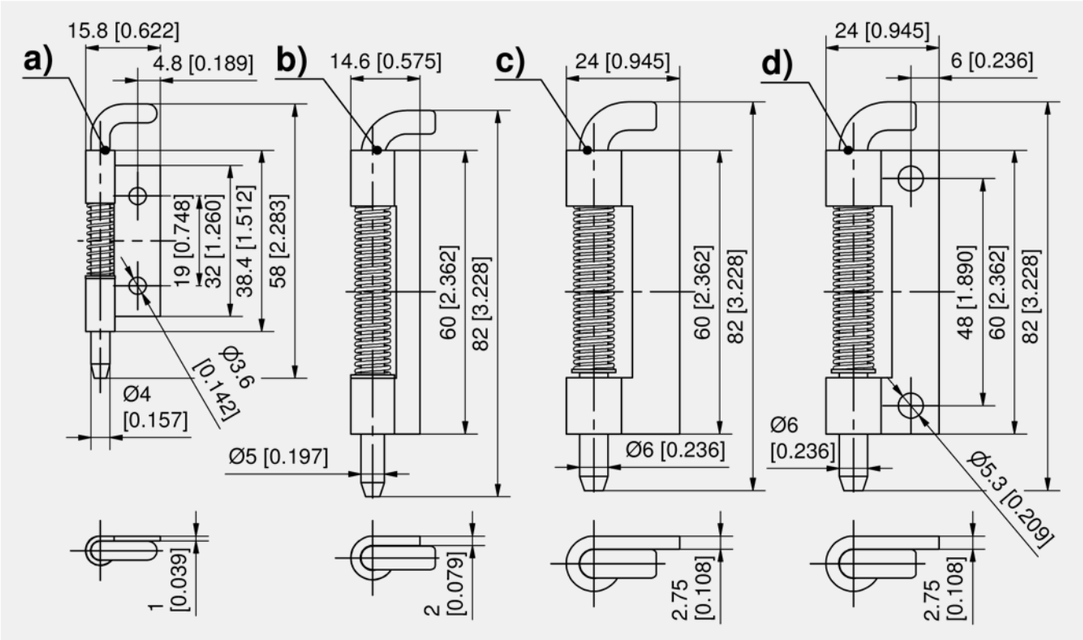

Pin hinge

	Part Number	Door-part	Version	Pin length L	Pin diameter Ø	Pin version	Installation type	Delivery Unit
a)	245-9001.00-00000	zinc plated	RH	58 mm	4 mm	spring-loaded	screw-on	10 pcs.
b)	245-9103.00-00000	untreated	RH	82 mm	5 mm	spring-loaded	weld-on	10 pcs.
c)	245-9113.00-00000	untreated	RH	82 mm	6 mm	spring-loaded	weld-on	10 pcs.
d)	245-9101.00-00000	untreated	RH	82 mm	6 mm	spring-loaded	screw- / weld-on	10 pcs.
d1)	245-9107.00-00000	zinc plated	RH	82 mm	6 mm	spring-loaded	screw-on	10 pcs.
a)	245-9002.00-00000	zinc plated	LH	58 mm	4 mm	spring-loaded	screw-on	10 pcs.
b)	245-9104.00-00000	untreated	LH	82 mm	5 mm	spring-loaded	weld-on	10 pcs.
d)	245-9102.00-00000	untreated	LH	82 mm	6 mm	spring-loaded	screw- / weld-on	10 pcs.
d1)	245-9108.00-00000	zinc plated	LH	82 mm	6 mm	spring-loaded	screw-on	10 pcs.
b)	245-9105.00-00000	untreated	not assembled	82 mm	5 mm	spring-loaded	weld-on	10 pcs.
d)	245-9106.00-00000	untreated	not assembled	82 mm	6 mm	spring-loaded	screw- / weld-on	10 pcs.
d1)	245-9109.00-00000	zinc plated	not assembled	82 mm	6 mm	spring-loaded	screw-on	10 pcs.

4-392

all product details on DIRAK.com

Pin Hinge Pr02 120° Stainless Steel

[7-250]

Advantages

- Hinge with spring-loaded pin.
- For nested doors.
- Hinge concealed.
- RH and LH version.
- 120° Opening angle.

Materials

- **Roll:** AISI 304
- **Pin:** AISI 303
- **Spring:** AISI 301

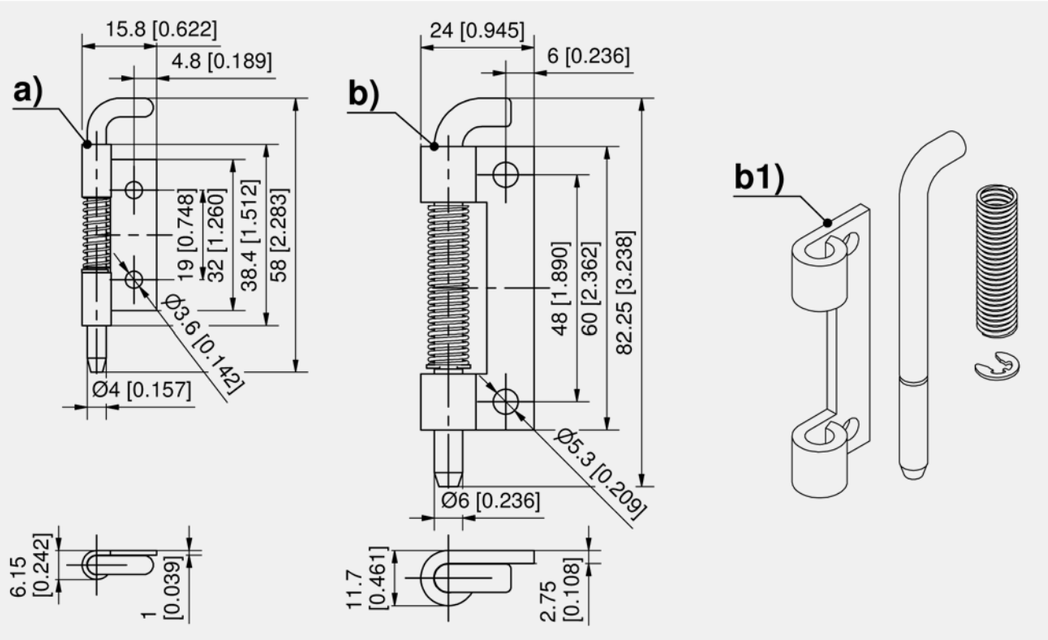

Pin hinge

	Part Number	Version	Pin length L	Pin diameter Ø	Pin version	Installation type	Delivery Unit
a)	245-9003.00-00000	RH version	58 mm	4 mm	spring-loaded	screw- / weld-on	10 pcs.
a)	245-9004.00-00000	LH version	58 mm	4 mm	spring-loaded	screw- / weld-on	10 pcs.
b)	245-9110.00-00000	RH version	82 mm	6 mm	spring-loaded	screw- / weld-on	10 pcs.
b)	245-9111.00-00000	LH version	82 mm	6 mm	spring-loaded	screw- / weld-on	10 pcs.
b1)	245-9112.00-00000	not assembled	82 mm	6 mm	spring-loaded	screw- / weld-on	10 pcs.

all product details on DIRAK.com

7-250

Pin Hinge Pr02 120°

Advantages

- For nested doors.
- Hinge concealed.
- Small space requirement.
- 120° Opening angle.
- The spring loaded pin allows for an easy and quick installation and removal of the door.
- The installation is tool-less with a simple push into the appropriate cutout.

Materials

- **Housing:** PA, black
- **Pin:** steel, zinc plated

a) and c)

- **Spring:** stainless steel

b)

- **Spring:** steel, zinc plated

Remarks

Door-cutout and frame-cutout differ.

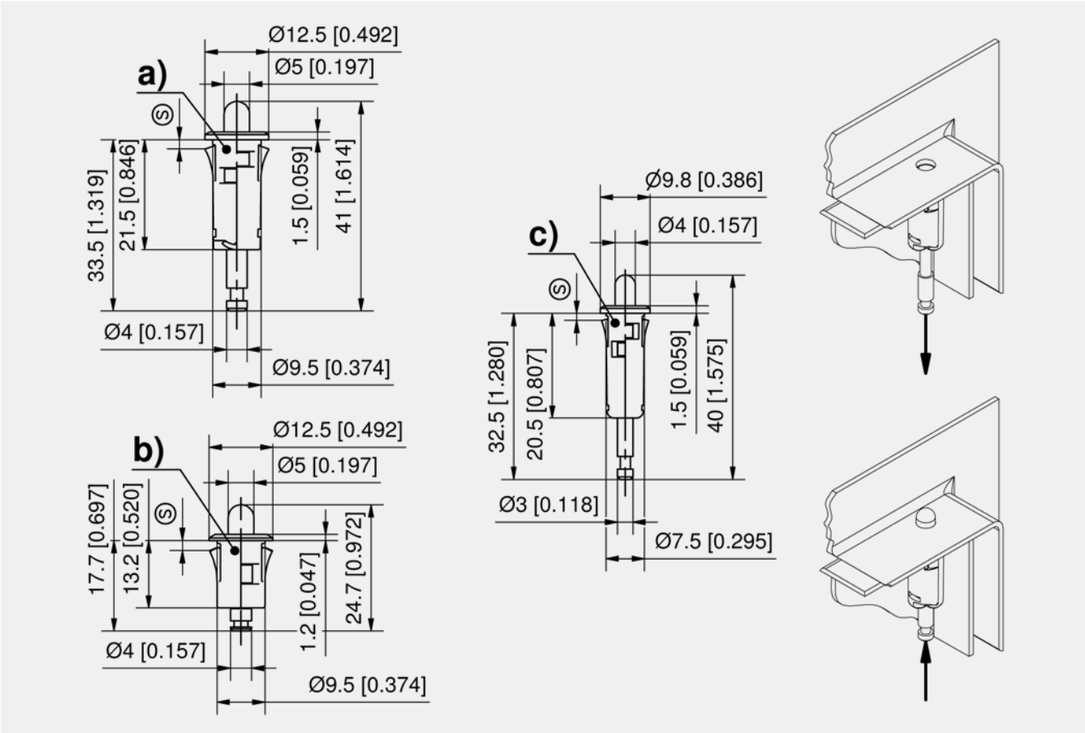

Pin hinge

	Part Number	Clamping range (S)	Pin length L	Pin diameter Ø	Pin version	Installation type	Delivery Unit
a)	245-9303.00-00000	1.4 - 1.6 mm	41 mm	5 mm	spring-loaded	tool-less	10 pcs.
b)	245-9304.07-07101	1.4 - 1.6 mm	24.7 mm	5 mm	spring-loaded	tool-less	10 pcs.
c)	245-9301.00-00000	1.0 - 1.2 mm	40 mm	4 mm	spring-loaded	tool-less	10 pcs.

4-393
◂ all product details on DIRAK.com

Pin Hinge Pr02 120°

Advantages

- Pin hinge with spring-loaded handle.
- For nested doors.
- Hinge concealed.
- RH / LH application.
- 120° Opening angle.
- Flexible use for material thicknesses up to 4mm.
- The spring loaded pin allows for an easy and quick installation and removal of the door.
- The installation is tool-less with a simple push into the appropriate cutout.
- Usable also as locking pin.

Materials

- **Pin:** steel, zinc plated
- **Handle:** PA, green
- **Spacer:** PA, black

Remarks

1. assembled without tools by pressing the locking pin into the handle.
2. disassembling the door.
3. door installed.
4. by reducing the material in the cutout, the distance between the two components can be adjusted.

On request also available with another handle (see 6-211).

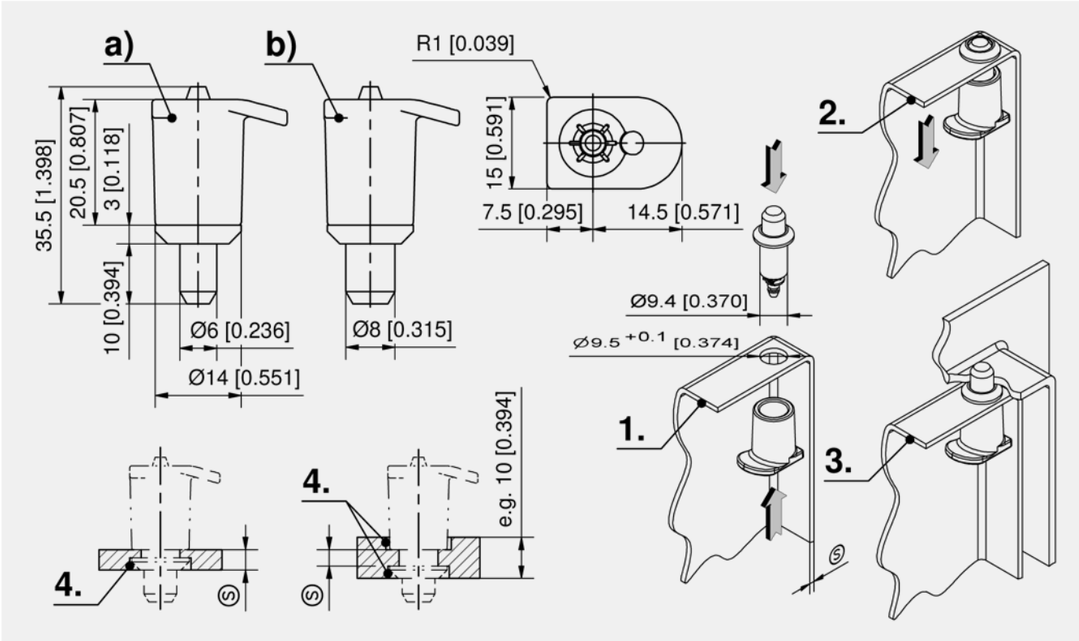

Pin hinge

	Part Number	Clamping range (S)	Pin diameter Ø	Cutout pin	Pin version	Installation type	Delivery Unit
a)	245-9312.00-00000	0 - 4 mm	6 mm	Ø 6,1 + 0,1 mm	spring-loaded	tool-less	50 pcs.
b)	245-9313.00-00000	0 - 4 mm	8 mm	Ø 8,1 + 0,1 mm	spring-loaded	tool-less	50 pcs.

all product details ▸ on DIRAK.com
4-394

Concealed Hinge Pr02 120°

[4-095]

Advantages

- For nested doors.
- Hinge concealed.
- RH / LH application.
- 120° Opening angle.

Materials

- **Frame-part and door-part:** zinc die, zinc plated
- **Fastening clip and pin:** steel, zinc plated

Remarks

Fitting hardware included.

(S) Door-thickness max. 2mm when using the supplied screws.

1. cutout door
2. cutout frame
3. closed
4. opened

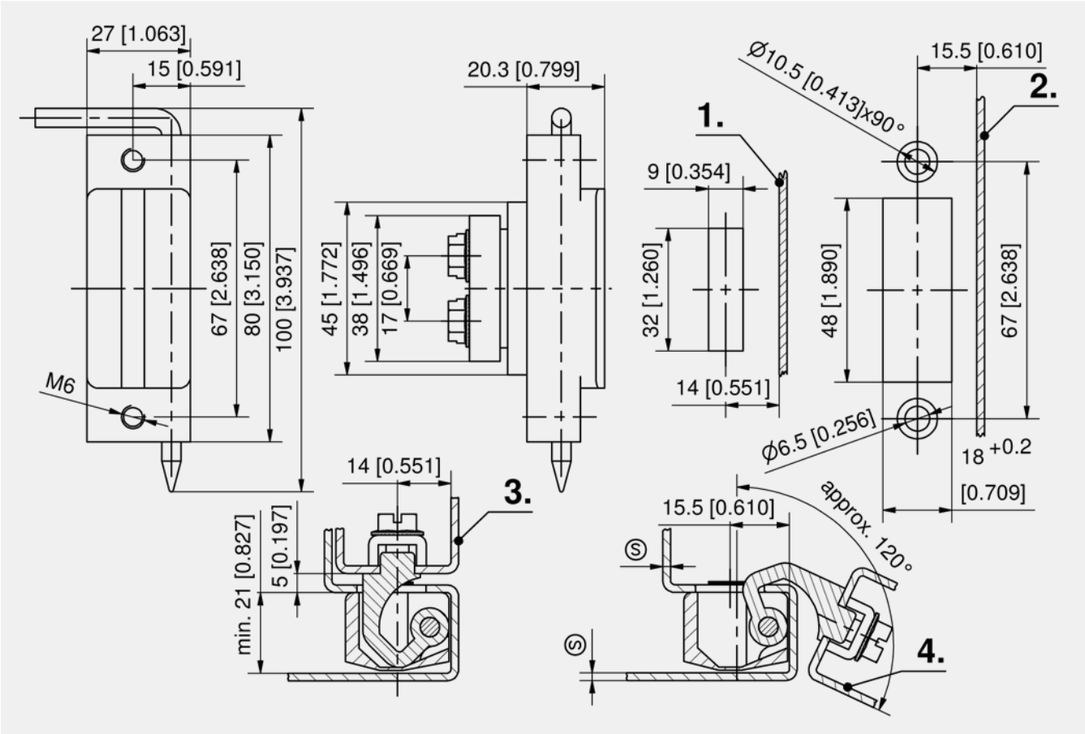

Concealed hinge

Part Number	Pin length L	Pin version	Installation type	Delivery Unit
222-9301.00-00000	100 mm	loose	screw-on	10 pcs.

Hinge Pr01 with Fastening Bracket 180°

See page 520

4-095

all product details on DIRAK.com

Hinges

Concealed Hinge Pr03 125°

[4-118]

Advantages

- For surface mounted doors.
- Hinge concealed.
- Door bending from 16-18 mm.
- RH / LH application.
- 125° Opening angle.
- Pin secured by bushing.

Materials

- **Frame-part and hinge pin:** steel, zinc plated
- **Weld-on roll:** steel, untreated
- **Fitting block:** PA, black
- **Securing bushing:** PE-LD black
- **Self-tapping screw:** stainless steel

Remarks

Fastening material included.

1. hinge pin
2. weld-on roll
3. frame-part
4. securing bushing
5. fitting block PA
6. self-tapping screw

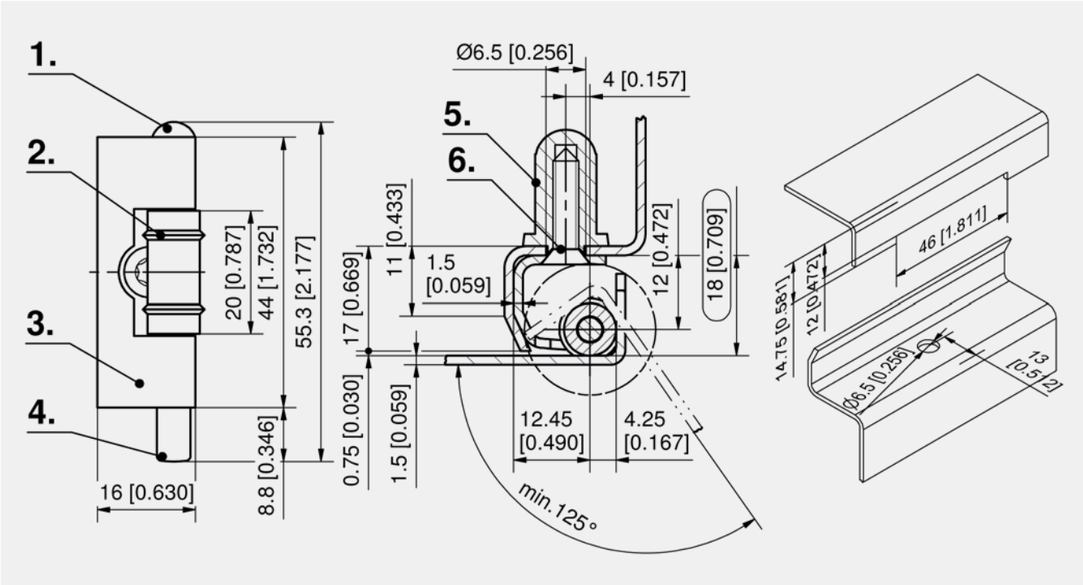

Concealed hinge

Part Number	Version	Pin version	Installation type	Delivery Unit
216-9015.00-00000	Screw Philips DIN 7982 ISO 7050 4.2x19mm	pressed in	screw- / weld-on	10 pcs.
216-9035.00-00000	Screw T-20 ISO 14586 Form C 4.2x19mm	pressed in	screw- / weld-on	10 pcs.

4-118

all product details on DIRAK.com

Concealed Hinge Pr03 125° Stainless Steel

[7-138]

Advantages

- For surface mounted doors.
- Hinge concealed.
- Door bending from 16-18 mm.
- RH / LH application.
- 125° Opening angle.
- Pin secured by bushing.

Materials

- **Frame-part and pin:** AISI 304
- **Weld-on roll for spot welding:** AISI 303
- **Fitting block:** PA6, black
- **Securing bushing:** PE-LD black
- **Self-tapping screw:** stainless steel

Remarks

Fastening material included.

1. frame-part
2. weld-on roll
3. pin
4. securing bushing
5. self-tapping screw
6. fitting block PA

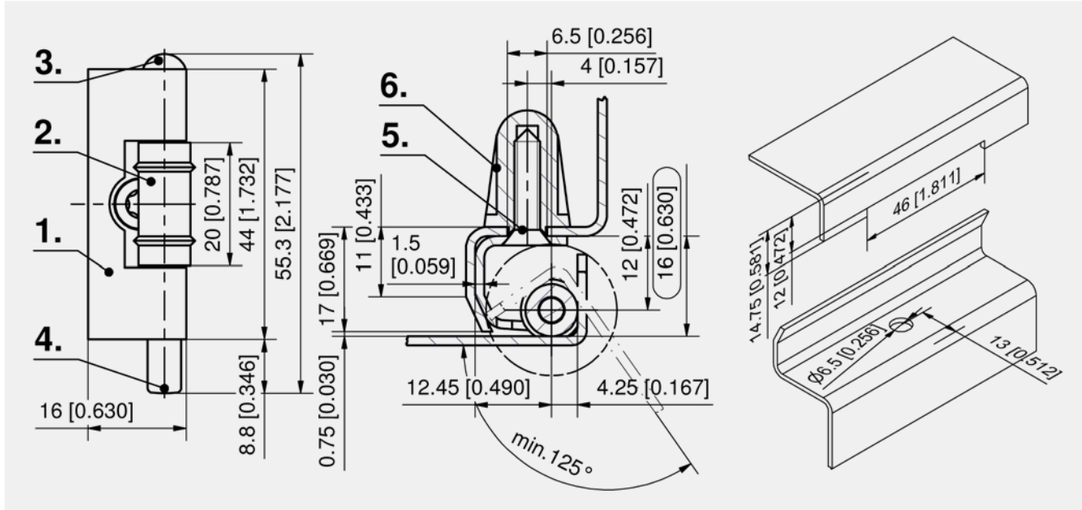

Concealed hinge

Part Number	Version	Pin version	Installation type	Delivery Unit
216-9113.00-00000	Screw Philips DIN 7982 ISO 7050 4.2x19mm	pressed in	screw- / weld-on	10 pcs.
216-9128.00-00000	Screw T-20 ISO 14586 Form C 4.2x19mm	pressed in	screw- / weld-on	10 pcs.

all product details on DIRAK.com

7-138

Concealed Hinge Pr03 115°

[4-119]

Advantages

- For surface mounted doors.
- Hinge concealed.
- Door bending 16mm.
- RH / LH application.
- 115° Opening angle.
- Hinge pin secured by bushing.
- Frame-part with force fitted stud M5 x 12.
- Door-part weld on.

Materials

- **Frame-part:** steel, zinc plated
- **Door-part:** steel, untreated
- **Pin:** stainless steel
- **Securing bushing:** PE-LD black

Remarks

1. frame-part
2. door-part
3. hinge pin
4. securing bushing
5. threaded stud M5 x 12
6. welding projections

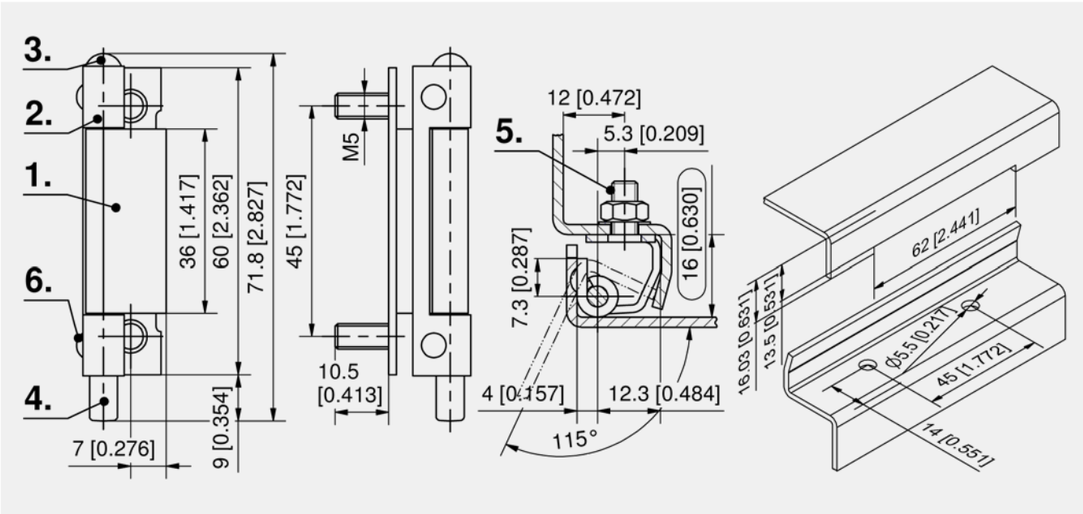

Concealed hinge

Part Number	Pin version	Installation type	Delivery Unit
216-9032.00-00000	pressed in	screw- / weld-on	10 pcs.

4-119
all product details on DIRAK.com

Concealed Hinge Pr03 115° Stainless Steel

[7-139]

Advantages

- For surface mounted doors.
- Hinge concealed.
- Door bending 16mm.
- RH / LH application.
- 115° Opening angle.
- Frame-part with force fitted stud M5 x 12.
- Door-part weld on.

Materials

- **Frame-part and door-part:** AISI 304
- **Knurled pin:** AISI 303
- **Stud:** AISI 410

Remarks

1. frame-part
2. door-part with welding projections ISO 8167-P5
3. pin
4. threaded stud M5 x 12
5. welding spots

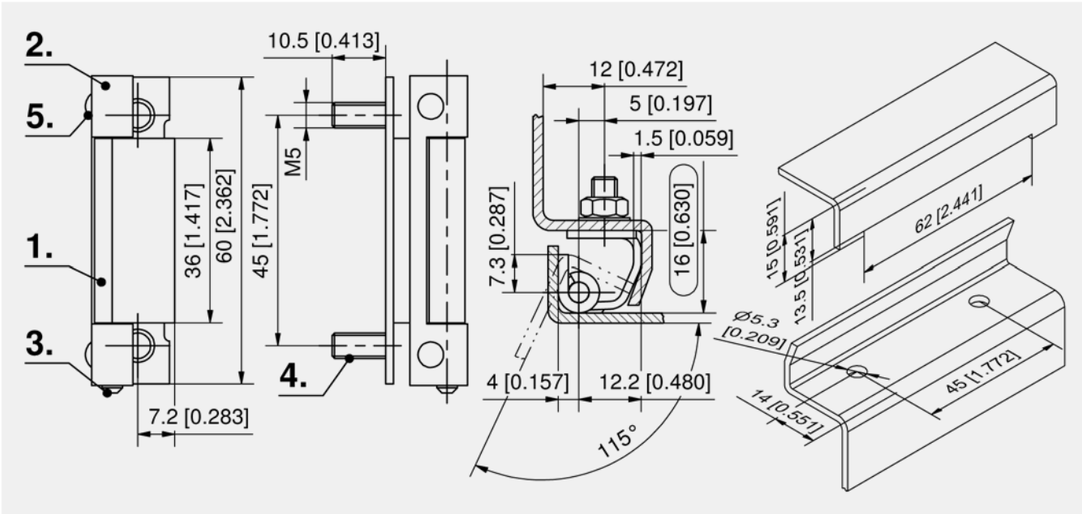

Concealed hinge

Part Number	Pin version	Installation type	Delivery Unit
216-9033.00-00000	pressed in	screw- / weld-on	10 pcs.

all product details on DIRAK.com
7-139

Concealed Hinge Pr03 120°

[4-120]

Advantages

- For surface mounted doors.
- Hinge concealed.
- Door bending 18 mm.
- RH / LH application.
- 120° Opening angle.
- Frame-part weld-on or screw-on.

Materials

- **Frame-part:** steel, zinc plated or steel, untreated
- **Door-part:** steel, untreated
- **Pins and retaining ring:** steel, zinc plated
- **O-ring:** NBR

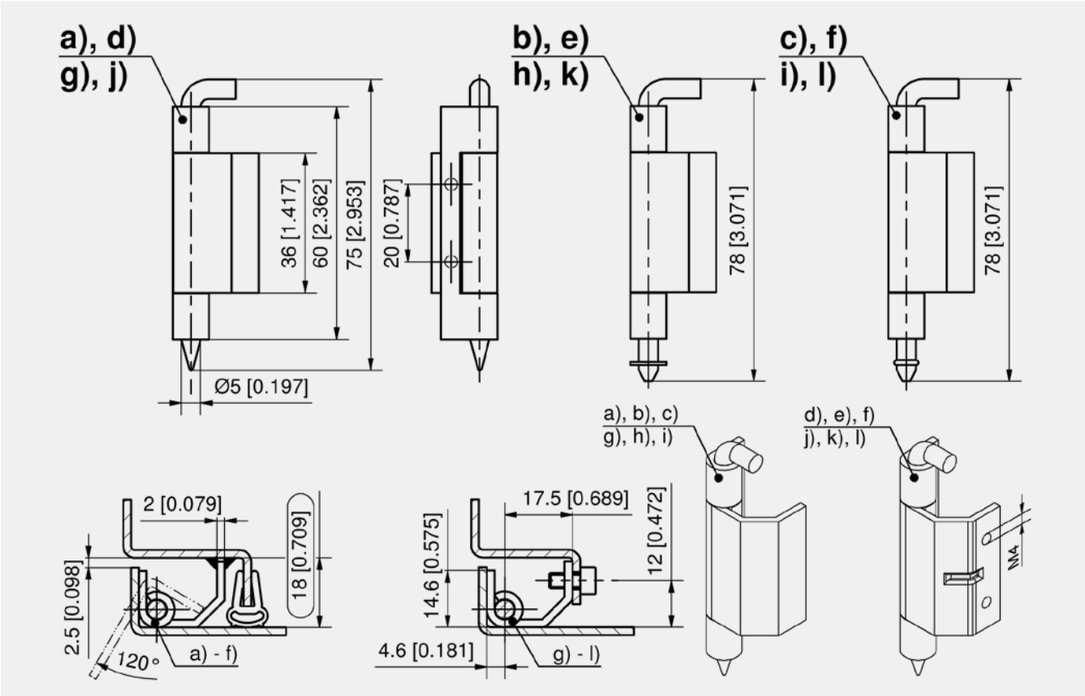

Concealed hinge

	Part Number	Version	Surface frame-part	Pin version	Installation type frame-part	Delivery Unit
a)	216-9001.00-00000		untreated	without groove	weld-on	10 pcs.
b)	216-9009.00-00000		untreated	with groove incl. locking washer DIN6799	weld-on	10 pcs.
c)	216-9009.00-00001		untreated	with groove incl. o-ring	weld-on	10 pcs.
d)	216-9020.00-00000	reinforced	untreated	without groove	weld-on	10 pcs.
e)	216-9018.00-00000	reinforced	zinc plated	with groove incl. locking washer DIN6799	weld-on	10 pcs.
f)	216-9018.00-00001	reinforced	zinc plated	with groove incl. o-ring	weld-on	10 pcs.
g)	216-9002.00-00000		zinc plated	without groove	screw-on	10 pcs.
h)	216-9010.00-00000		untreated	with groove incl. locking washer DIN6799	screw-on	10 pcs.
i)	216-9010.00-00001		untreated	with groove incl. o-ring	screw-on	10 pcs.
j)	216-9021.00-00000	reinforced	zinc plated	without groove	screw-on	10 pcs.
k)	216-9019.00-00000	reinforced	zinc plated	with groove incl. locking washer DIN6799	screw-on	10 pcs.
l)	216-9019.00-00001	reinforced	zinc plated	with groove incl. o-ring	screw-on	10 pcs.

4-120

◂ all product details on DIRAK.com

Concealed Hinge Pr03 120° Stainless Steel

[7-140]

Advantages

- For surface mounted doors.
- Hinge concealed.
- Door bending 18 mm.
- RH / LH application.
- 120° Opening angle.
- Frame-part weld-on or screw-on.

Materials

- **Hinge-parts:** AISI 316 or AISI 304
- **Pins:** AISI 316 or AISI 303

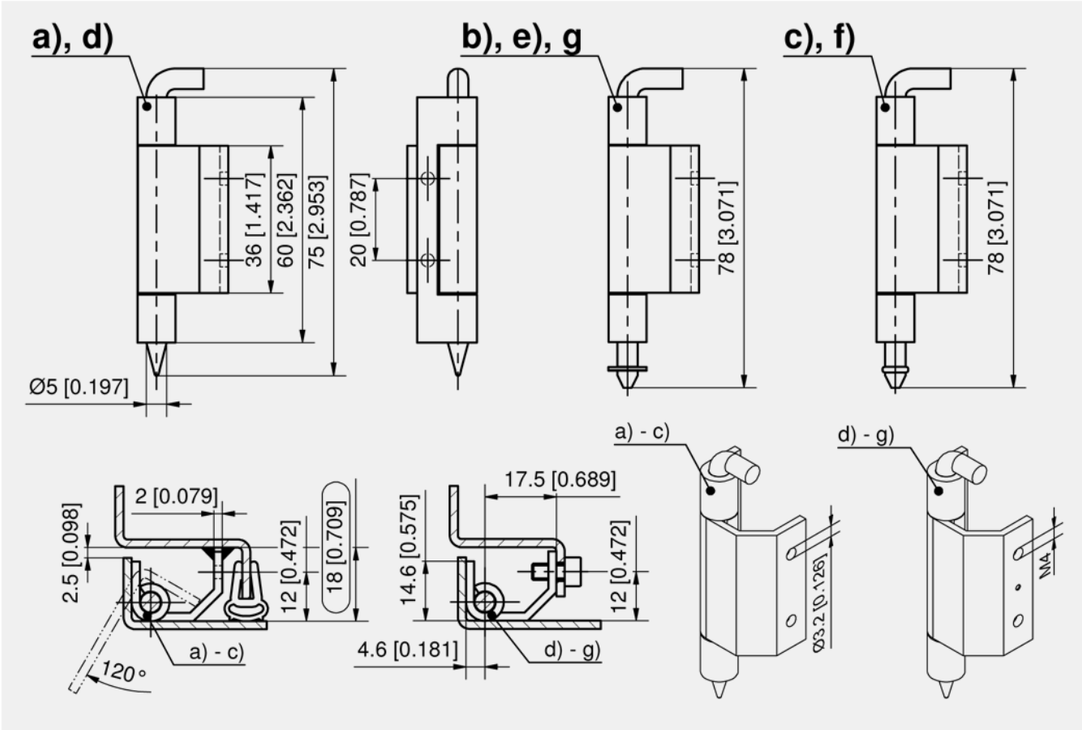

Concealed hinge

	Part Number	Material hinge-parts	Pin version	Material pin	Installation type	Delivery Unit
a)	216-9101.00-00000	AISI 304	without groove	AISI 303	weld-on	10 pcs.
b)	216-9109.00-00000	AISI 304	with groove incl. locking washer DIN6799	AISI 303	weld-on	10 pcs.
c)	216-9109.00-00001	AISI 304	with groove incl. o-ring	AISI 303	weld-on	10 pcs.
d)	216-9102.00-00000	AISI 304	without groove	AISI 303	screw- / weld-on	10 pcs.
e)	216-9110.00-00000	AISI 304	with groove incl. locking washer DIN6799	AISI 303	screw- / weld-on	10 pcs.
f)	216-9110.00-00001	AISI 304	with groove incl. o-ring	AISI 303	screw- / weld-on	10 pcs.
f)	216-9121.00-00001	AISI 316	with groove incl. o-ring	AISI 316	screw- / weld-on	10 pcs.
g)	216-9121.00-00002	AISI 316	with groove incl. locking washer DIN6799	AISI 316	screw- / weld-on	10 pcs.

all product details ▸ on DIRAK.com

7-140

Concealed Hinge Pr03 120°

[4-122]

Advantages

- For surface mounted doors.
- Hinge concealed.
- Door bending 20mm.
- RH / LH application.
- 120° Opening angle.

Materials

- **Frame-part and pin:** steel, zinc plated
- **Door-part:** steel, untreated
- **O-ring:** NBR

Remarks

Fastening with countersunk screws M5.

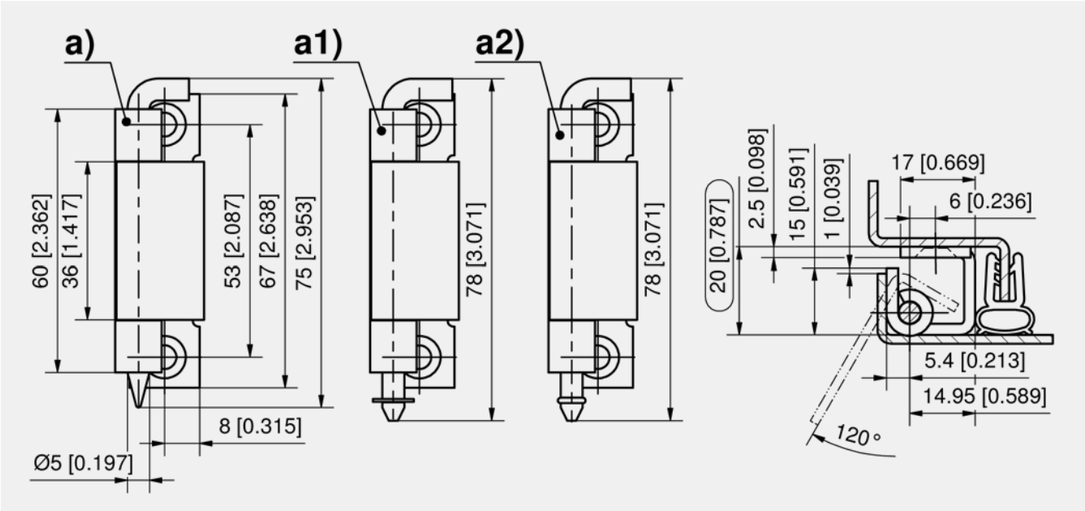

Concealed hinge

	Part Number	Pin version	Installation type	Delivery Unit
a)	216-9005.00-00000	without groove	screw- / weld-on	10 pcs.
a1)	216-9022.00-00000	with groove incl. locking washer DIN6799	screw- / weld-on	10 pcs.
a2)	216-9022.00-00001	with groove incl. o-ring	screw- / weld-on	10 pcs.

4-122

all product details on DIRAK.com

Concealed Hinge Pr03 120° Stainless Steel

[7-145]

Advantages

- For surface mounted doors.
- Hinge concealed.
- Door bending 20mm.
- RH / LH application.
- 120° Opening angle.

Materials

- **Hinge-parts and pins:** AISI 304
- **O-ring:** NBR

Remarks

Fastening with countersunk screws M5 DIN 965 or DIN 7991

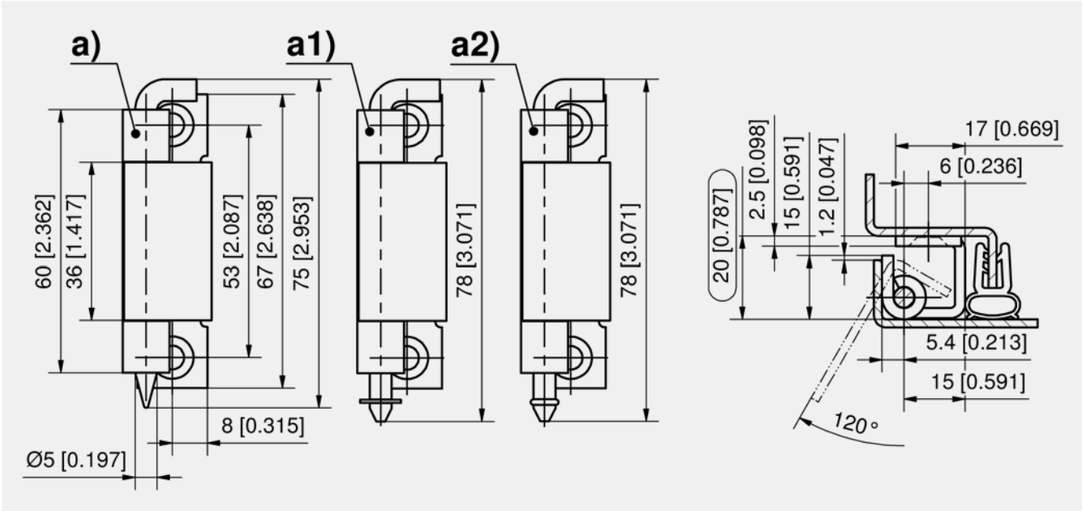

Concealed hinge

	Part Number	Pin version	Installation type	Delivery Unit
a)	216-9115.00-00000	without groove	screw-on	10 pcs.
a1)	216-9116.00-00000	with groove incl. locking washer DIN6799	screw-on	10 pcs.
a2)	216-9116.00-00001	with groove incl. o-ring	screw-on	10 pcs.

all product details on DIRAK.com

7-145

Concealed Hinge Pr03 120°

[4-124]

Advantages

- For surface mounted doors.
- Hinge concealed.
- Door bending 23mm.
- RH / LH application.
- 120° Opening angle.
- Door-part weld-on.

Materials

- **Frame-part, pin and fastening washer:** steel, zinc plated
- **Door-part:** steel, untreated

Remarks

1. installation instruction for fastening washer

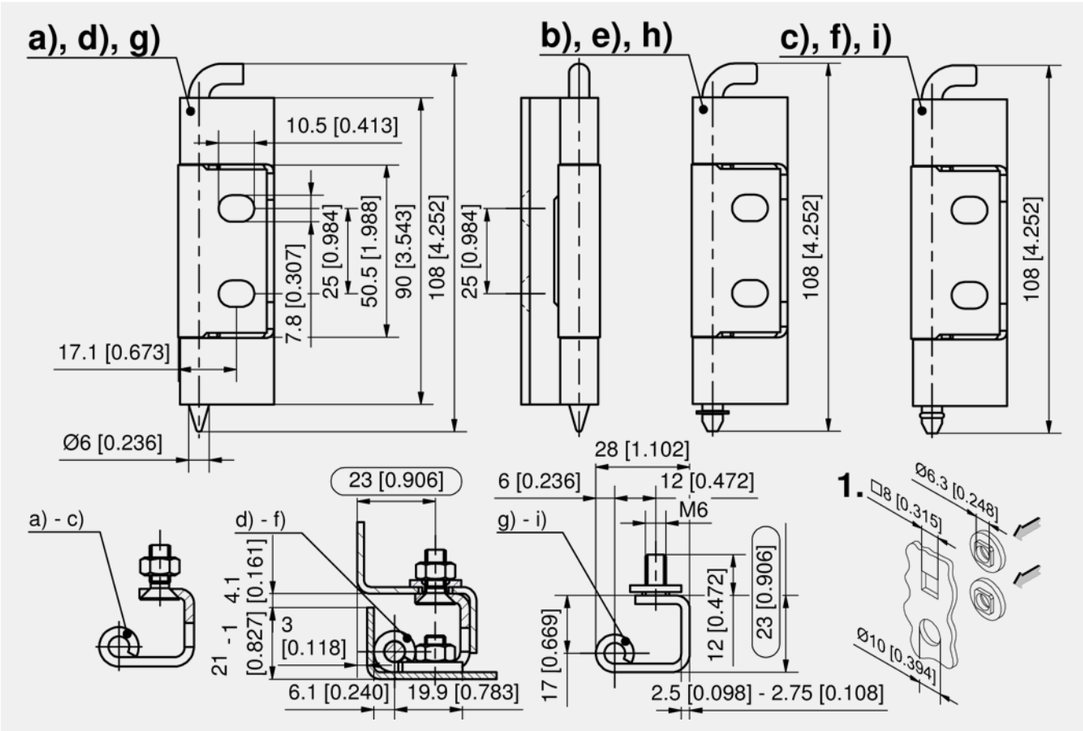

Concealed hinge

	Part Number	Frame-part	cutout in frame	Pin version	Delivery Unit
a)	243-9103.00-00000	with countersunk holes for M6	Ø6.3 or M6	without groove	10 pcs.
b)	243-9104.00-00000	with countersunk holes for M6	Ø6.3 or M6	with groove incl. locking washer DIN6799	10 pcs.
c)	243-9104.00-00001	with countersunk holes for M6	Ø6.3 or M6	with groove incl. o-ring	10 pcs.
d)	243-9101.00-00000	with countersunk holes for M6 + fastening washer	□8 or Ø10	without groove	10 pcs.
e)	243-9102.00-00000	with countersunk holes for M6 + fastening washer	□8 or Ø10	with groove incl. locking washer DIN6799	10 pcs.
f)	243-9102.00-00001	with countersunk holes for M6 + fastening washer	□8 or Ø10	with groove incl. o-ring	10 pcs.
g)	243-9109.00-00000	with studs for M6 + fastening washer	Ø6.3, □8, Ø10	without groove	10 pcs.
h)	243-9110.00-00000	with studs for M6 + fastening washer	Ø6.3, □8, Ø10	with groove incl. locking washer DIN6799	10 pcs.
i)	243-9110.00-00001	with studs for M6 + fastening washer	Ø6.3, □8, Ø10	with groove incl. o-ring	10 pcs.

4-124
◂ all product details on DIRAK.com

Concealed Hinge Pr03 120°

[4-124.01]

Advantages

- For surface mounted doors.
- Hinge concealed.
- Door bending 23mm.
- RH / LH application.
- 120° Opening angle.
- Door-part screw-on.

Materials

- **Frame- and door-part, pin and fastening washer:** steel, zinc plated

Remarks

1. installation instruction for fastening washer

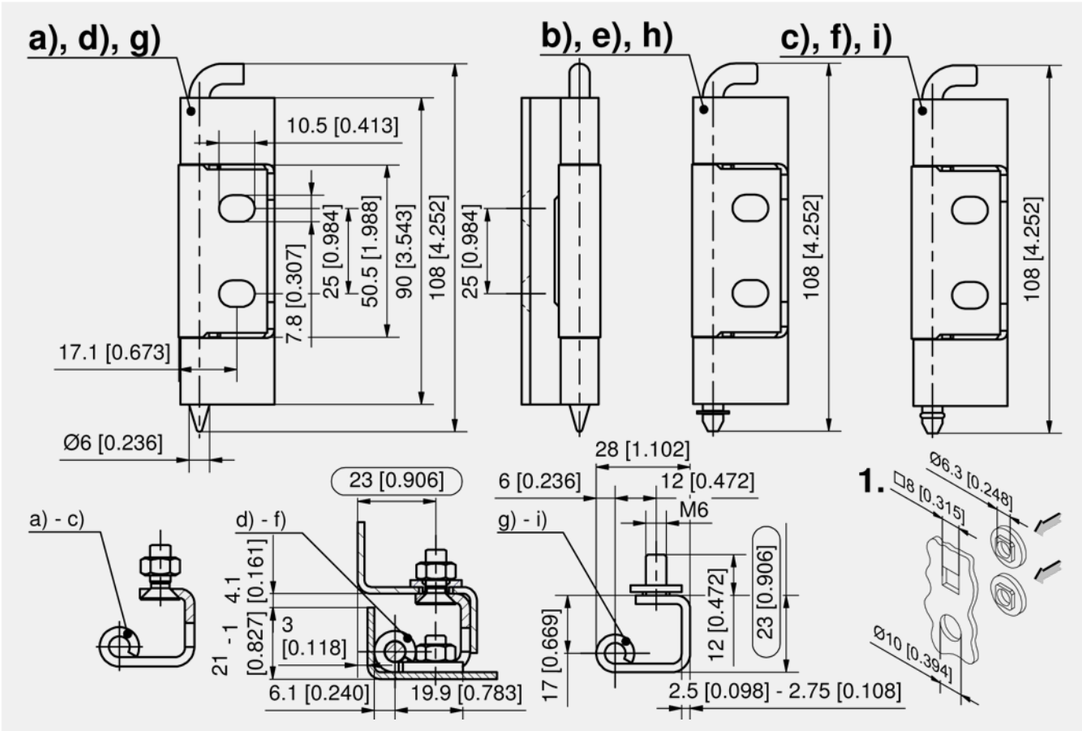

Concealed hinge

	Part Number	Frame-part	cutout in frame	Pin version	Delivery Unit
a)	243-9107.00-00000	with countersunk holes for M6	Ø6.3 or M6	without groove	10 pcs.
b)	243-9108.00-00000	with countersunk holes for M6	Ø6.3 or M6	with groove incl. locking washer DIN6799	10 pcs.
c)	243-9108.00-00001	with countersunk holes for M6	Ø6.3 or M6	with groove incl. o-ring	10 pcs.
d)	243-9105.00-00000	with countersunk holes for M6 + fastening washer	□8 or Ø10	without groove	10 pcs.
e)	243-9106.00-00000	with countersunk holes for M6 + fastening washer	□8 or Ø10	with groove incl. locking washer DIN6799	10 pcs.
f)	243-9106.00-00001	with countersunk holes for M6 + fastening washer	□8 or Ø10	with groove incl. o-ring	10 pcs.
g)	243-9111.00-00000	with studs for M6 + fastening washer	Ø6.3, □8, Ø10	without groove	10 pcs.
h)	243-9112.00-00000	with studs for M6 + fastening washer	Ø6.3, □8, Ø10	with groove incl. locking washer DIN6799	10 pcs.
i)	243-9112.00-00001	with studs for M6 + fastening washer	Ø6.3, □8, Ø10	with groove incl. o-ring	10 pcs.

all product details ▸ on DIRAK.com
4-124.01

Concealed Hinge Pr03 120°

[4-125]

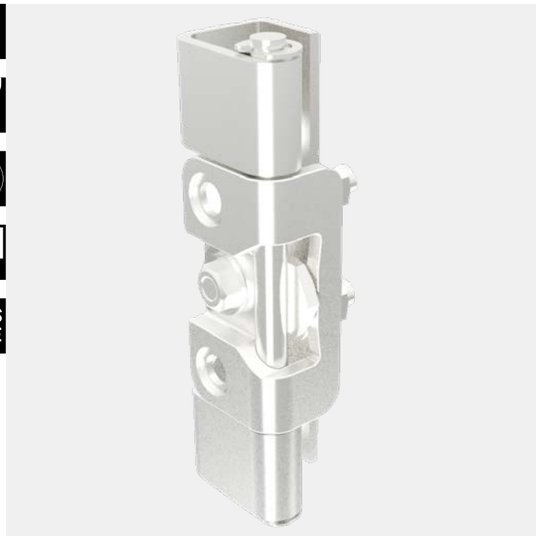

Advantages

- For surface mounted doors.
- Hinge concealed.
- Door bending 23 mm.
- RH / LH application.
- 120° Opening angle.
- By rotating the 1/4 turn, the pivot pin is released and the door can be removed by pulling it to the front (see 2. and 3.).

Materials

a), a1) and a2)

- **Door-part and ¼ turn:** zinc die, zinc plated
- **Frame-part and pin:** steel, zinc plated

b), b1) and b2)

- **All parts:** steel, zinc plated

Remarks

To a2) and b2):

fastening washer is not used when Ø6.3.

1. installation instruction for fastening washer

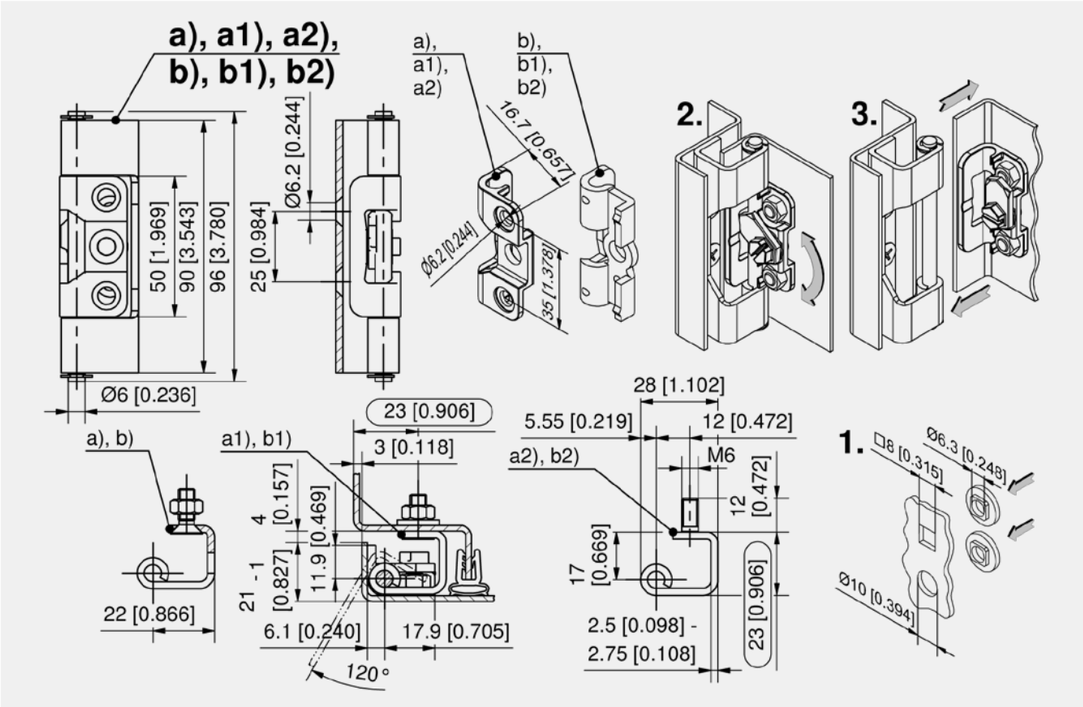

Concealed hinge

	Part Number	Frame-part	cutout in frame	Pin version	Installation type door-part	Delivery Unit
a)	243-9009.00-00000	with countersunk holes for M6	Ø6.3 or M6	with groove incl. locking washer DIN6799	screw-on	10 pcs.
a1)	243-9010.00-00000	with countersunk holes for M6 + fastening washer	□8 or Ø10	with groove incl. locking washer DIN6799	screw-on	10 pcs.
a2)	243-9011.00-00000	with studs for M6 + fastening washer	Ø6.3, □8, Ø10	with groove incl. locking washer DIN6799	screw-on	10 pcs.
b)	243-9003.00-00000	with countersunk holes for M6	Ø6.3 or M6	with groove incl. locking washer DIN6799	weld-on	10 pcs.
b1)	243-9002.00-00000	with countersunk holes for M6 + fastening washer	□8 or Ø10	with groove incl. locking washer DIN6799	weld-on	10 pcs.
b2)	243-9007.00-00000	with studs for M6 + fastening washer	Ø6.3, □8, Ø10	with groove incl. locking washer DIN6799	weld-on	10 pcs.

4-125

◂ all product details on DIRAK.com

Concealed Hinge Pr03 120° Stainless Steel

[7-165]

Advantages

- For surface mounted doors.
- Hinge concealed.
- Door bending 23mm.
- RH / LH application.
- 120° Opening angle.
- Door-part: weld-on or screw-on.

Materials

- **Frame- and door-part, pin without groove and fastening washer:** AISI 304
- **Pin with groove:** AISI 303
- **Stud:** AISI 420
- **O-ring:** NBR

Remarks

1. installation instruction for fastening washer

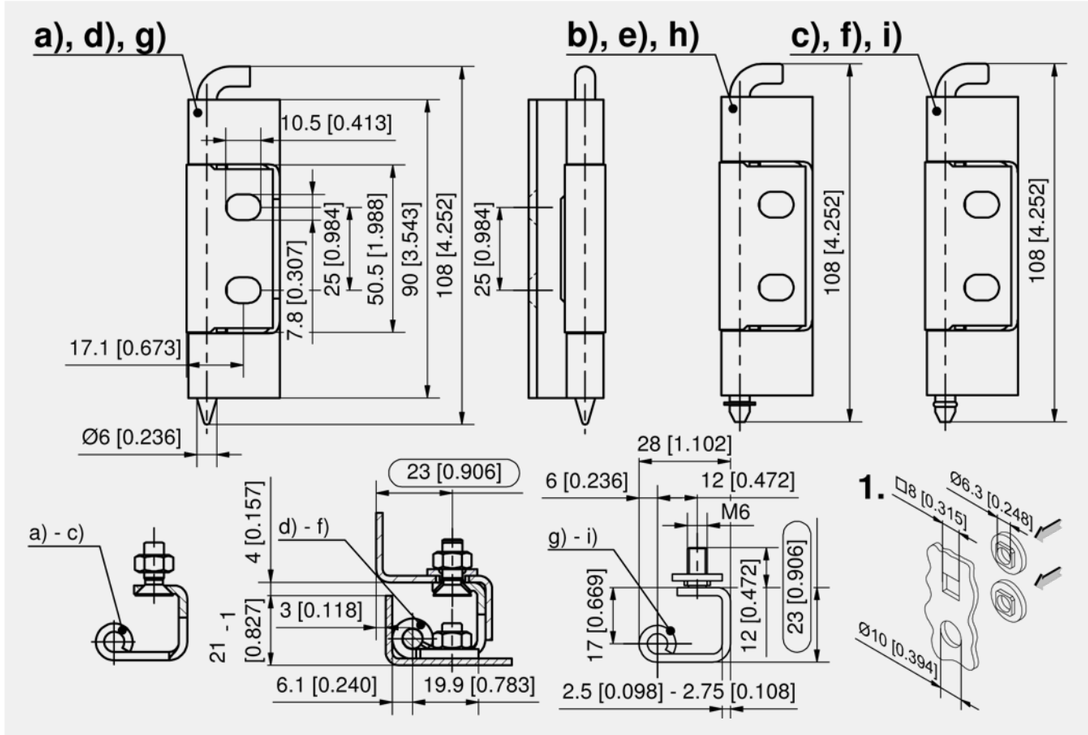

Concealed hinge

	Part Number	Frame-part	cutout in frame	Pin version	Delivery Unit
a)	243-9203.00-00000	with countersunk holes for M6	Ø6.3 or M6	without groove	10 pcs.
b)	243-9204.00-00000	with countersunk holes for M6	Ø6.3 or M6	with groove incl. locking washer DIN6799	10 pcs.
c)	243-9204.00-00001	with countersunk holes for M6	Ø6.3 or M6	with groove incl. o-ring	10 pcs.
d)	243-9201.00-00000	with countersunk holes for M6 + fastening washer	□8 or Ø10	without groove	10 pcs.
e)	243-9202.00-00000	with countersunk holes for M6 + fastening washer	□8 or Ø10	with groove incl. locking washer DIN6799	10 pcs.
f)	243-9202.00-00001	with countersunk holes for M6 + fastening washer	□8 or Ø10	with groove incl. o-ring	10 pcs.
g)	243-9208.00-00000	with studs for M6 + fastening washer	Ø6.3, □8, Ø10	without groove	10 pcs.
h)	243-9209.00-00000	with studs for M6 + fastening washer	Ø6.3, □8, Ø10	with groove incl. locking washer DIN6799	10 pcs.
i)	243-9209.00-00001	with studs for M6 + fastening washer	Ø6.3, □8, Ø10	with groove incl. o-ring	10 pcs.

all product details ▸ on DIRAK.com

7-165

Concealed Hinge Pr03 120°

[4-124.02]

Advantages

- For surface mounted doors.
- Hinge concealed.
- Door bending 23 mm.
- RH / LH application.
- 120° Opening angle.
- Door-part screw-on / weld-on.
- Captive pin due to securing clip.

Materials

- **Frame- and door-part, pin and fastening washer:** steel, zinc plated
- **Securing clip:** POM, blue

Remarks

1. installation instruction for fastening washer

2. installation of securing clip and mounting of the door-part in the frame-part

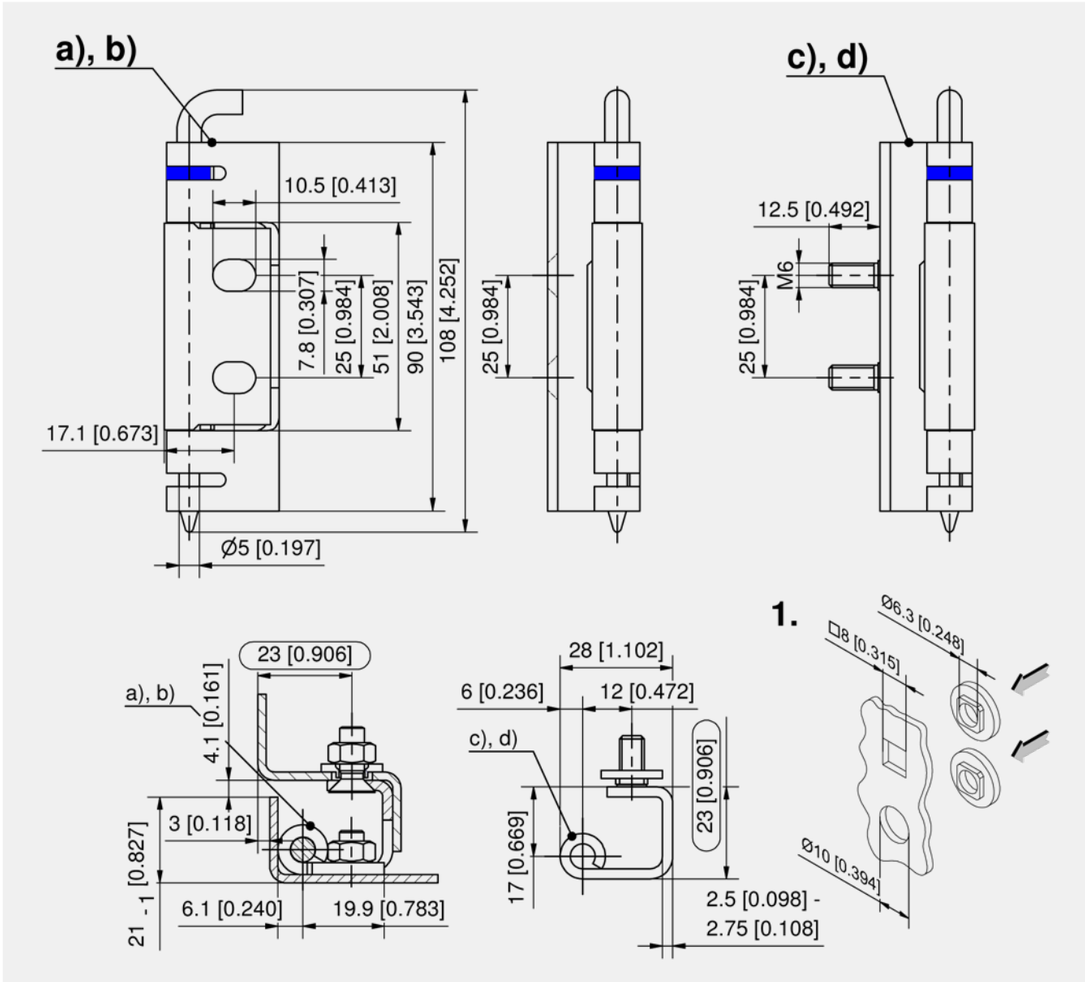

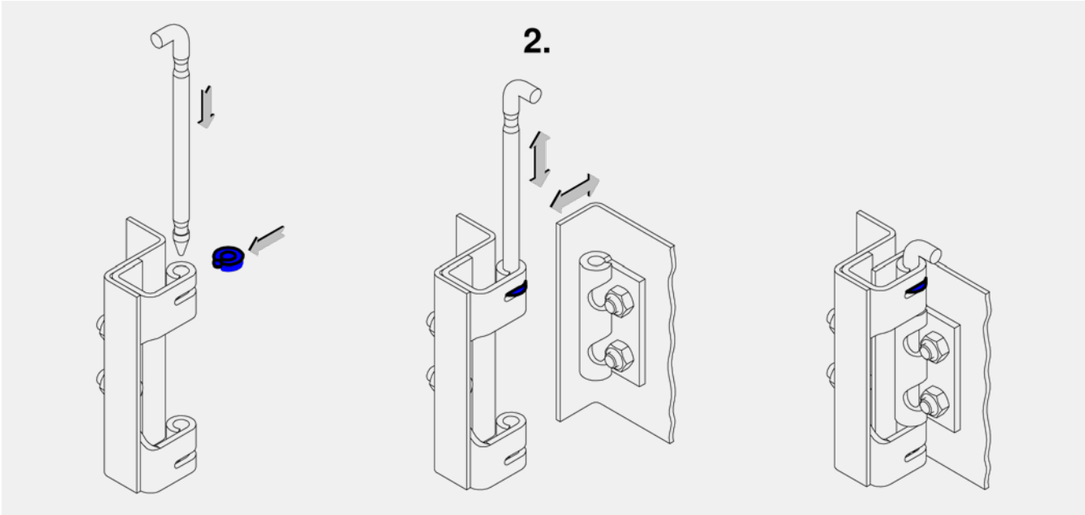

Concealed hinge

	Part Number	Frame-part	cutout in frame	Surface door-part	Pin version	Delivery Unit
a)	243-9113.00-00000	with countersunk holes for M6 + fastening washer	□8 or Ø10	zinc plated	self-locking	10 pcs.
b)	243-9115.00-00000	with countersunk holes for M6	Ø6.3	zinc plated	self-locking	10 pcs.
c)	243-9114.00-00000	with studs for M6 + fastening washer	□8 or Ø10	zinc plated	self-locking	10 pcs.
d)	243-9116.00-00000	with studs for M6	Ø6.3	zinc plated	self-locking	10 pcs.
a)	243-9117.00-00000	with countersunk holes for M6 + fastening washer	□8 or Ø10	untreated	self-locking	10 pcs.
b)	243-9119.00-00000	with countersunk holes for M6	Ø6.3	untreated	self-locking	10 pcs.
c)	243-9118.00-00000	with studs for M6 + fastening washer	□8 or Ø10	untreated	self-locking	10 pcs.
d)	243-9120.00-00000	with studs for M6	Ø6.3	untreated	self-locking	10 pcs.

Hinges

4-124.02

all product details on DIRAK.com

Concealed Hinge Pr03 120° Stainless Steel [7-165.01]

Advantages

- For surface mounted doors.
- Hinge concealed.
- Door bending 23mm.
- RH / LH application.
- 120° Opening angle.
- Door-part screw-on and weld-on.
- Captive pin due to securing clip.

Materials

- **Frame- and door-part, pin and fastening washer:** AISI 304
- **Securing clip:** POM, blue

Remarks

1. installation instruction for fastening washer

2. installation of securing clip and mounting of the door-part in the frame-part

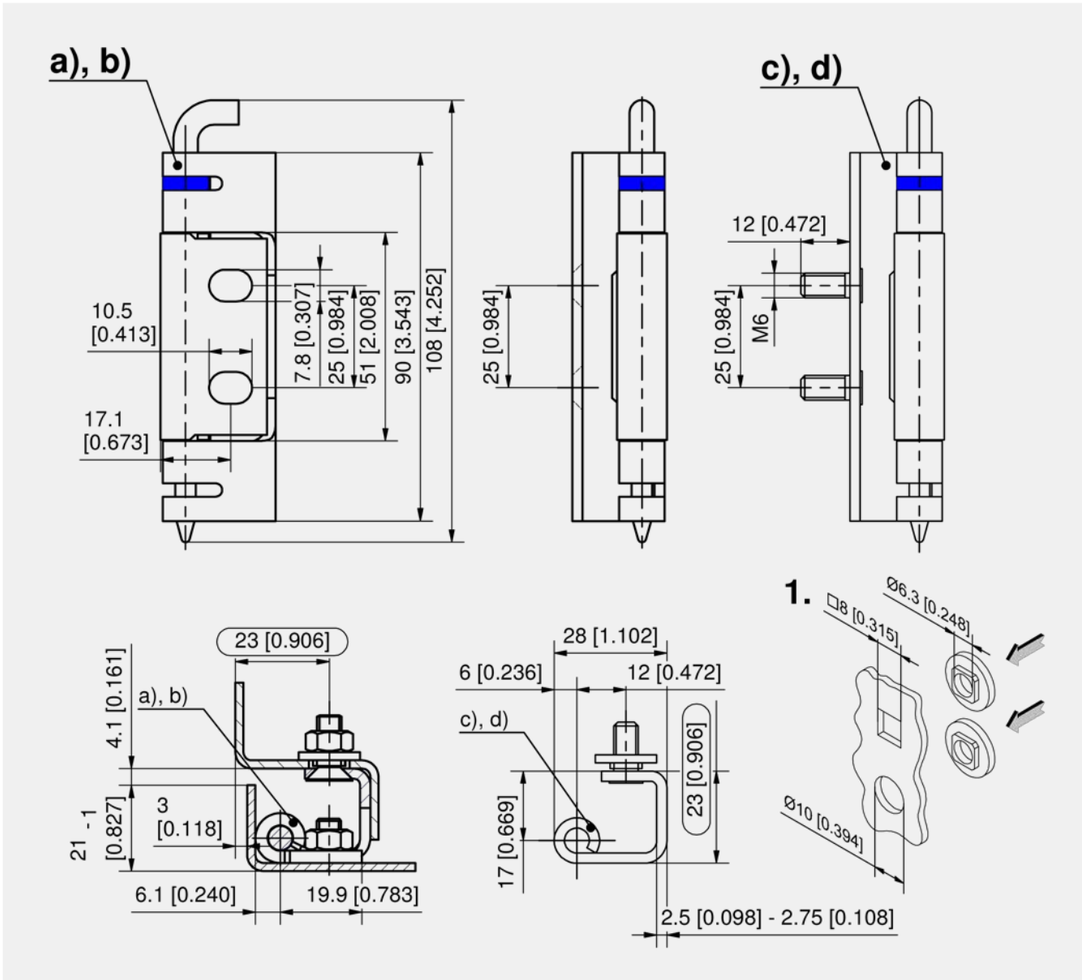

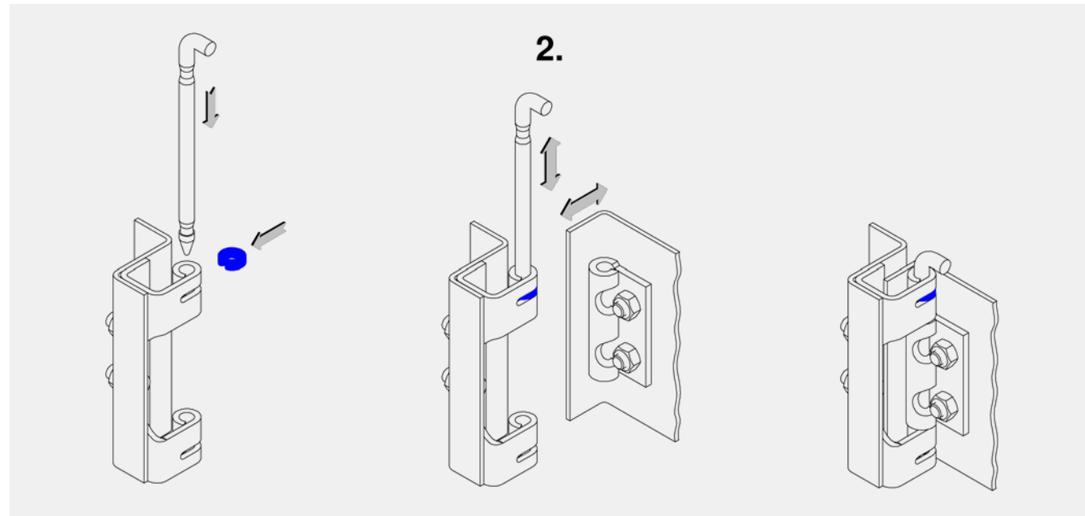

Concealed hinge

	Part Number	Frame-part	cutout in frame	Pin version	Delivery Unit
a)	243-9214.00-00000	with countersunk holes for M6	Ø6.3	self-locking	10 pcs.
b)	243-9216.00-00000	with countersunk holes for M6 + fastening washer	□8 or Ø10	self-locking	10 pcs.
c)	243-9215.00-00000	with studs for M6	Ø6.3	self-locking	10 pcs.
d)	243-9217.00-00000	with studs for M6 + fastening washer	□8 or Ø10	self-locking	10 pcs.

7-165.01

all product details on DIRAK.com

DST Concealed Hinge Pr03 130°

[4-124DST]

Advantages

- For surface mounted doors.
- Hinge concealed.
- Bending 23mm.
- RH / LH application.
- 130° Opening angle.
- Tool-less installation of frame-part.
- The captive pin is pre-assembled.
- The pin engages to the wire springs at the frame-part and so it is captive.
- By pulling the pin the hinge can be removed.
- Door-part adjustable ±5mm.
- IP65 according to DIN EN 60529.

Materials

- **Frame-part:** zinc die, untreated
- **Door-part and pin:** steel, zinc plated
- **Snap wedges:** sintered metal, coated
- **O-ring:** NBR
- **Bearing bushings:** POM

Remarks

1. door notch
2. weld stud M8x15
3. bearing bushings

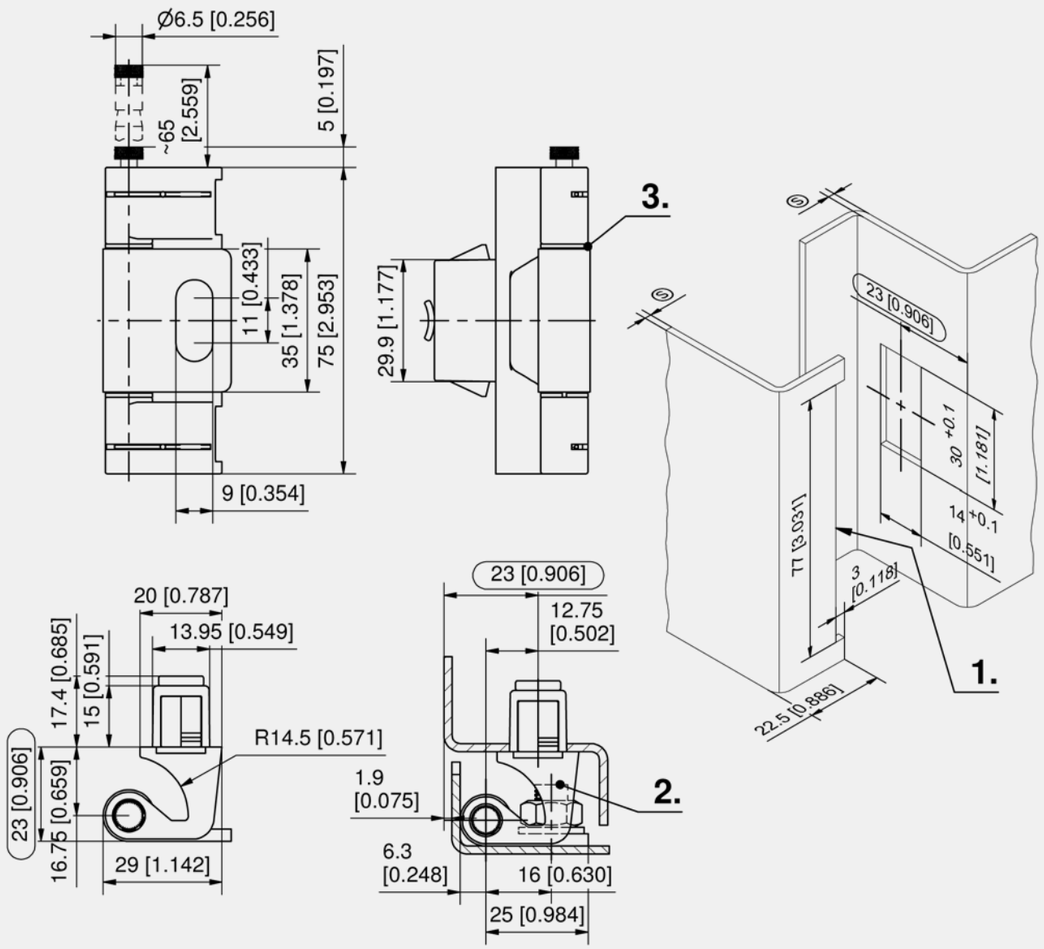

4-124DST

all product details on DIRAK.com

Examples of installation situations

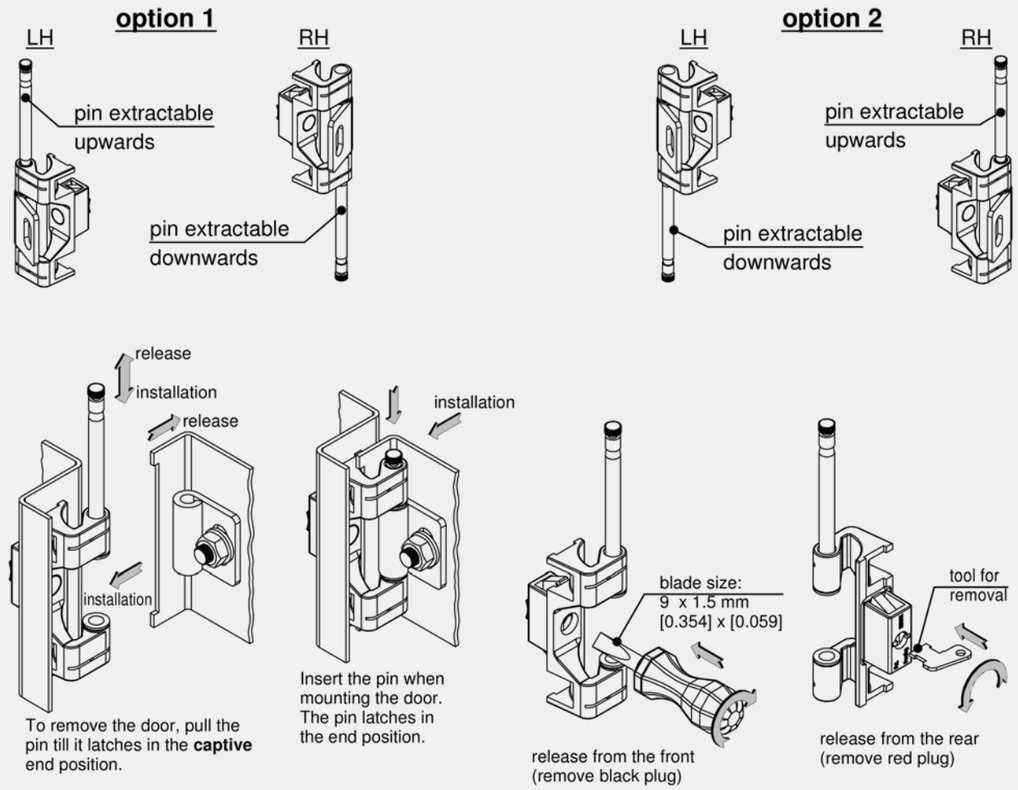

Hinge option 1: door LH, pin top, door RH, pin bottom

Part Number	Clamping range (S)	Pin version	Installation type	Delivery Unit
443-9001.00-10015	1.2 - 1.7 mm	self-locking	tool-less / screw-on	10 pcs.
443-9001.00-10020	1.7 - 2.2 mm	self-locking	tool-less / screw-on	10 pcs.
443-9001.00-10025	2.2 - 2.7 mm	self-locking	tool-less / screw-on	10 pcs.
443-9001.00-10030	2.7 - 3.2 mm	self-locking	tool-less / screw-on	10 pcs.
443-9001.00-10033	3.0 - 3.5 mm	self-locking	tool-less / screw-on	10 pcs.

Hinge option 2: door RH, pin top, door LH, pin bottom

Part Number	Clamping range (S)	Pin version	Installation type	Delivery Unit
443-9001.00-20015	1.2 - 1.7 mm	self-locking	tool-less / screw-on	10 pcs.
443-9001.00-20020	1.7 - 2.2 mm	self-locking	tool-less / screw-on	10 pcs.
443-9001.00-20025	2.2 - 2.7 mm	self-locking	tool-less / screw-on	10 pcs.
443-9001.00-20030	2.7 - 3.2 mm	self-locking	tool-less / screw-on	10 pcs.
443-9001.00-20033	3.0 - 3.5 mm	self-locking	tool-less / screw-on	10 pcs.

	Accessories
764	292-0301.15-00000 **Tool for uninstallation**
764	292-0306.80-02530 **Tool for uninstallation**
762	292-0402.00-03014 **Cutout-cover**
763	292-0701.15-01530 **Reinforcement plate for cutout**

DST Concealed Hinge Pr03 130° Stainless Steel [7-164DST]

Advantages

- For surface mounted doors.
- Hinge concealed.
- Door bending 23mm.
- RH / LH application.
- 130° Opening angle.
- Tool-less installation of frame-part.
- The pin engages to the wire springs at the frame-part and so it is captive.
- By pulling the pin the hinge can be removed.
- Door-part adjustable ±5mm.
- IP65 according to DIN EN 60529.

Materials

- **Frame- and door-part:** AISI 316
- **Pin:** AISI 303
- **Snap wedges:** stainless steel
- **O-ring:** NBR, black

Remarks

1. door-notch
2. weld-stud M8x15

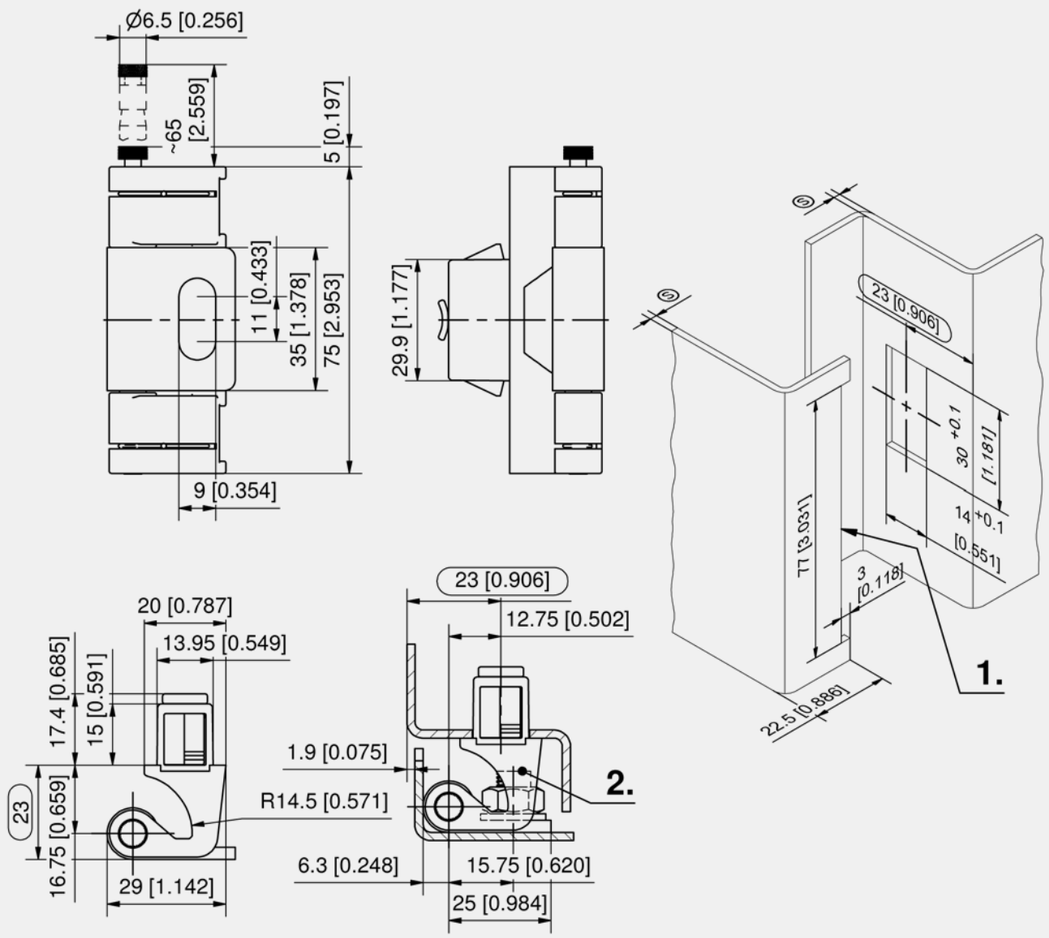

7-164DST

all product details on DIRAK.com

Examples of installation situations

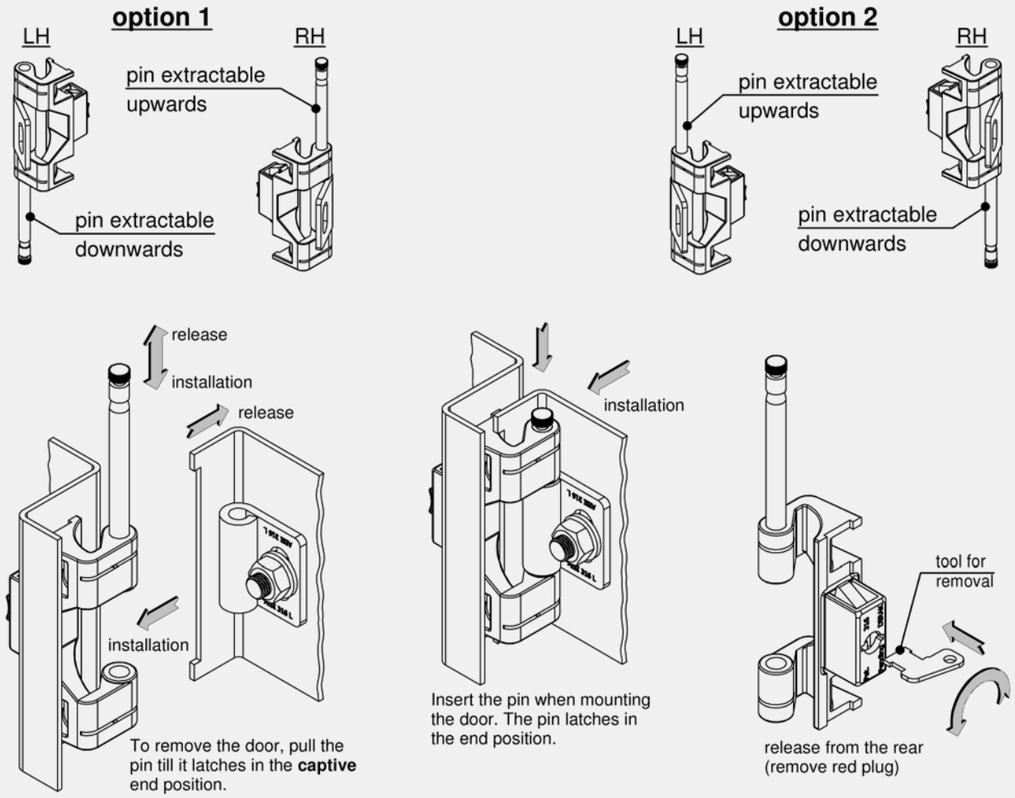

Hinge option 1: door RH, pin top, door LH, pin bottom

Part Number	Clamping range (S)	Pin version	Installation type	Delivery Unit
443-9002.00-10015	1.2 - 1.7 mm	self-locking	tool-less / screw-on	10 pcs.
443-9002.00-10020	1.7 - 2.2 mm	self-locking	tool-less / screw-on	10 pcs.
443-9002.00-10025	2.2 - 2.7 mm	self-locking	tool-less / screw-on	10 pcs.
443-9002.00-10030	2.7 - 3.2 mm	self-locking	tool-less / screw-on	10 pcs.

Hinge option 2: door LH, pin top, door RH, pin bottom

Part Number	Clamping range (S)	Pin version	Installation type	Delivery Unit
443-9002.00-20015	1.2 - 1.7 mm	self-locking	tool-less / screw-on	10 pcs.
443-9002.00-20020	1.7 - 2.2 mm	self-locking	tool-less / screw-on	10 pcs.
443-9002.00-20025	2.2 - 2.7 mm	self-locking	tool-less / screw-on	10 pcs.
443-9002.00-20030	2.7 - 3.2 mm	self-locking	tool-less / screw-on	10 pcs.

	Accessories
764	292-0301.15-00000 **Tool for uninstallation**
764	292-0306.80-02530 **Tool for uninstallation**
762	292-0402.00-03014 **Cutout-cover**
763	292-0701.15-01530 **Reinforcement plate for cutout**

DST Concealed Hinge Pr03 130°

[4-125DST]

DST

R L

130°

IP 65

RoHS WEEE

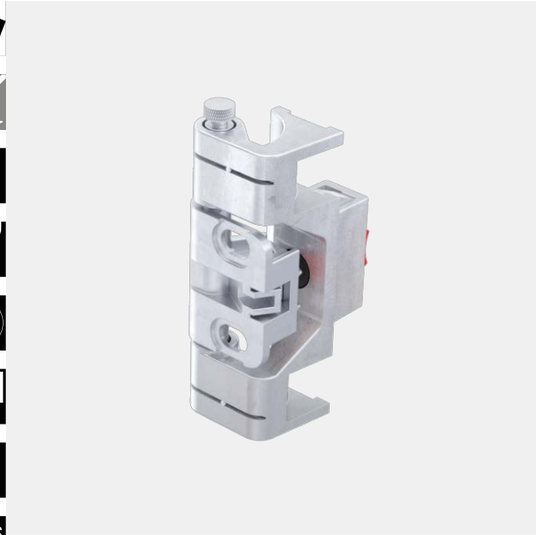

Advantages

- For surface mounted doors.
- Hinge concealed.
- Door bending 23mm.
- RH / LH application.
- 130° Opening angle.
- Tool-less installation of frame part.
- No tools needed. Just push the door onto the pin of the frame-part.
- The captive pin is pre-assembled.
- The pin engages to the wire springs at the frame-part and so it is captive.
- By pulling the pin the hinge can be removed.
- Door-part adjustable ±5mm.
- Seismic-proof according to GR-63-CORE, Issue 4.
- IP65 according to DIN EN 60529.

Materials

- **Frame-part:** zinc die, untreated
- **Door-part and slider:** zinc die, zinc plated
- **Pin:** steel, zinc plated
- **Snap wedges:** sintered metal, plated
- **O-ring:** NBR
- **Bearing bushings:** POM

Remarks

1. door notch
2. weld stud M6x12
3. bearing bushings

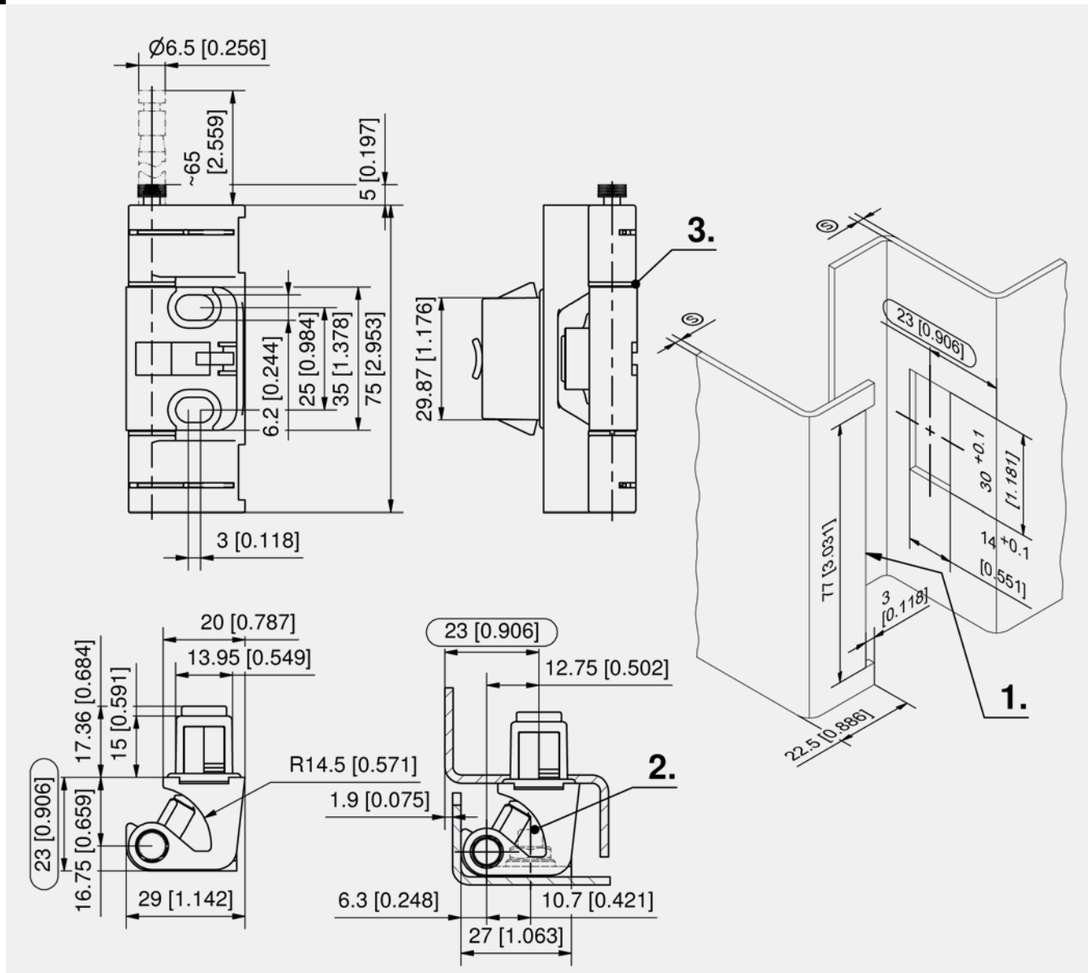

4-125DST

all product details on DIRAK.com

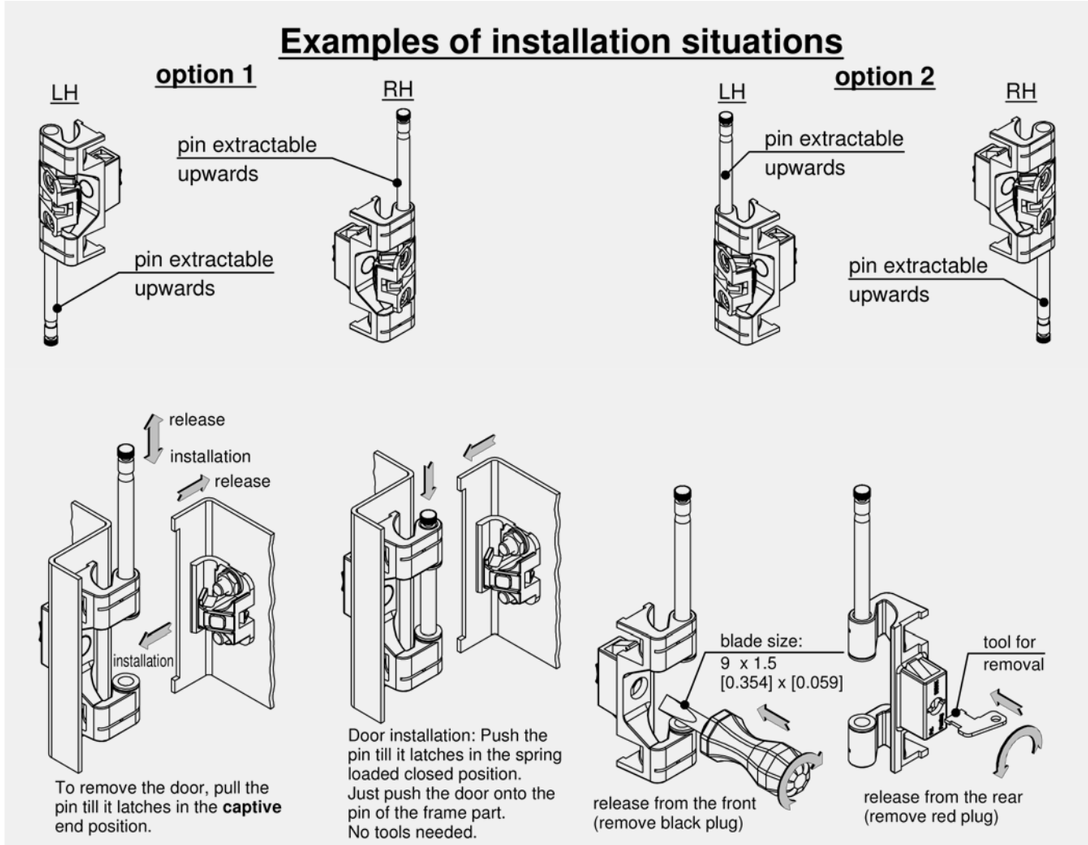

Hinge option 1: door LH, pin bottom, door RH, pin top

Part Number	Clamping range (S)	Pin version	Installation type	Delivery Unit
443-9101.00-10015	1.2 - 1.7 mm	self-locking	tool-less / screw-on	10 pcs.
443-9101.00-10020	1.7 - 2.2 mm	self-locking	tool-less / screw-on	10 pcs.
443-9101.00-10025	2.2 - 2.7 mm	self-locking	tool-less / screw-on	10 pcs.
443-9101.00-10030	2.7 - 3.2 mm	self-locking	tool-less / screw-on	10 pcs.
443-9101.00-10033	3.0 - 3.5 mm	self-locking	tool-less / screw-on	10 pcs.

Hinge option 2: door LH, pin top, door RH, pin bottom

Part Number	Clamping range (S)	Pin version	Installation type	Delivery Unit
443-9101.00-20015	1.2 - 1.7 mm	self-locking	tool-less / screw-on	10 pcs.
443-9101.00-20020	1.7 - 2.2 mm	self-locking	tool-less / screw-on	10 pcs.
443-9101.00-20025	2.2 - 2.7 mm	self-locking	tool-less / screw-on	10 pcs.
443-9101.00-20030	2.7 - 3.2 mm	self-locking	tool-less / screw-on	10 pcs.
443-9101.00-20033	3.0 - 3.5 mm	self-locking	tool-less / screw-on	10 pcs.

	Accessories
764	292-0301.15-00000 **Tool for uninstallation**
764	292-0306.80-02530 **Tool for uninstallation**
762	292-0402.00-03014 **Cutout-cover**
763	292-0701.15-01530 **Reinforcement plate for cutout**

Concealed Hinge Pr03 120° Stainless Steel

[7-166]

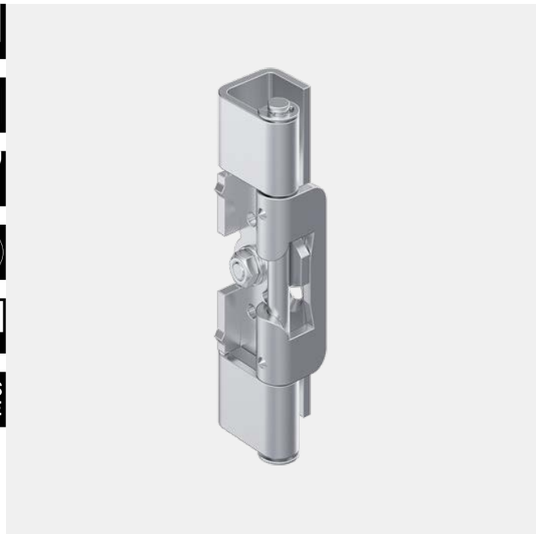

Advantages

- For surface mounted doors.
- Hinge concealed.
- Door bending 23 mm.
- RH / LH application.
- 120° Opening angle.
- By rotating the 1/4 turn on the door-part, the door can be removed to the front. (see 3. and 4.)

Materials

- **Frame- and door-part, cross-bar and fastening washer:** AISI 304
- **Pin:** AISI 303
- **Stud:** AISI 420

Remarks

1. weld projections
2. installation instruction for fastening washer

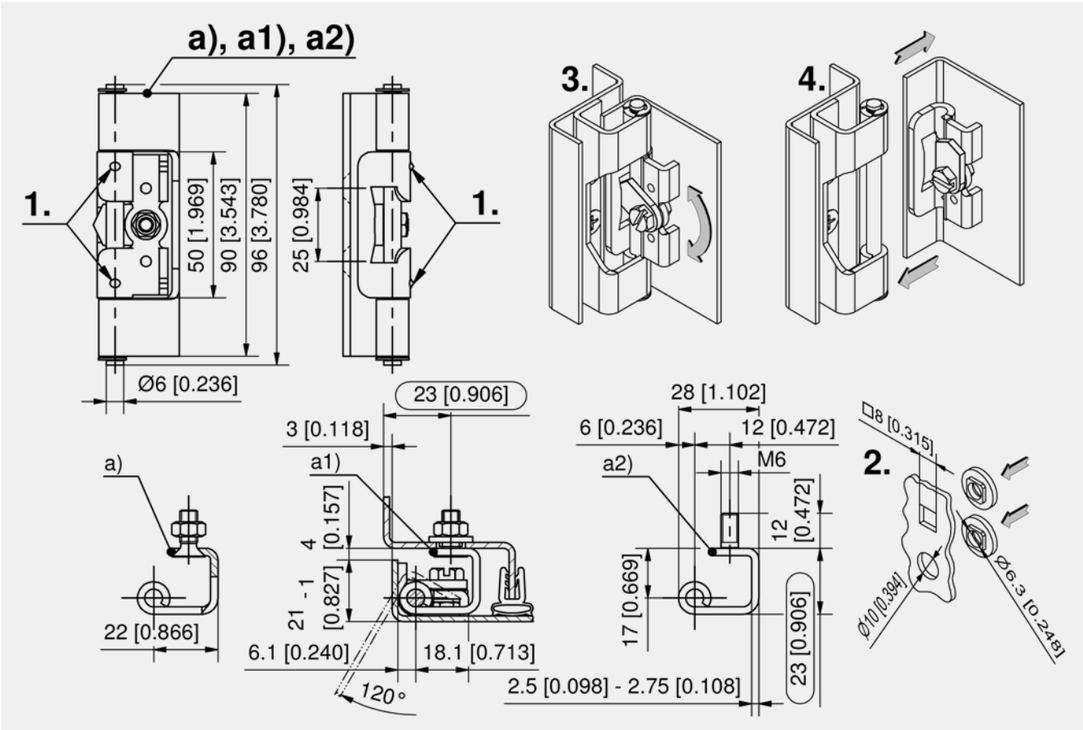

Concealed hinge

	Part Number	Frame-part	cutout in frame	Pin version	Installation type	Delivery Unit
a)	243-9206.00-00000	with countersunk holes for M6	Ø6.3 or M6	with groove incl. locking washer DIN6799	screw- / weld-on	10 pcs.
a1)	243-9207.00-00000	with countersunk holes for M6 + fastening washer	□8 or Ø10	with groove incl. locking washer DIN6799	screw- / weld-on	10 pcs.
a2)	243-9210.00-00000	with studs for M6	Ø6.3, □8, Ø10	with groove incl. locking washer DIN6799	screw- / weld-on	10 pcs.

7-166
◂ all product details on DIRAK.com

Concealed Hinge Pr03 120° Stainless Steel

[7-167]

Advantages

- For surface mounted doors.
- Hinge concealed.
- Door bending 23mm.
- RH / LH application.
- 120° Opening angle.
- By rotating the 1/4 turn on the door-part, the door can be removed to the front. (see 2. and 3.)

Materials

- **Frame-part, cross-bar and fastening washer:** AISI 304
- **Door-part:** AISI 316
- **Pin:** AISI 303

Remarks

1. installation instruction for fastening washer

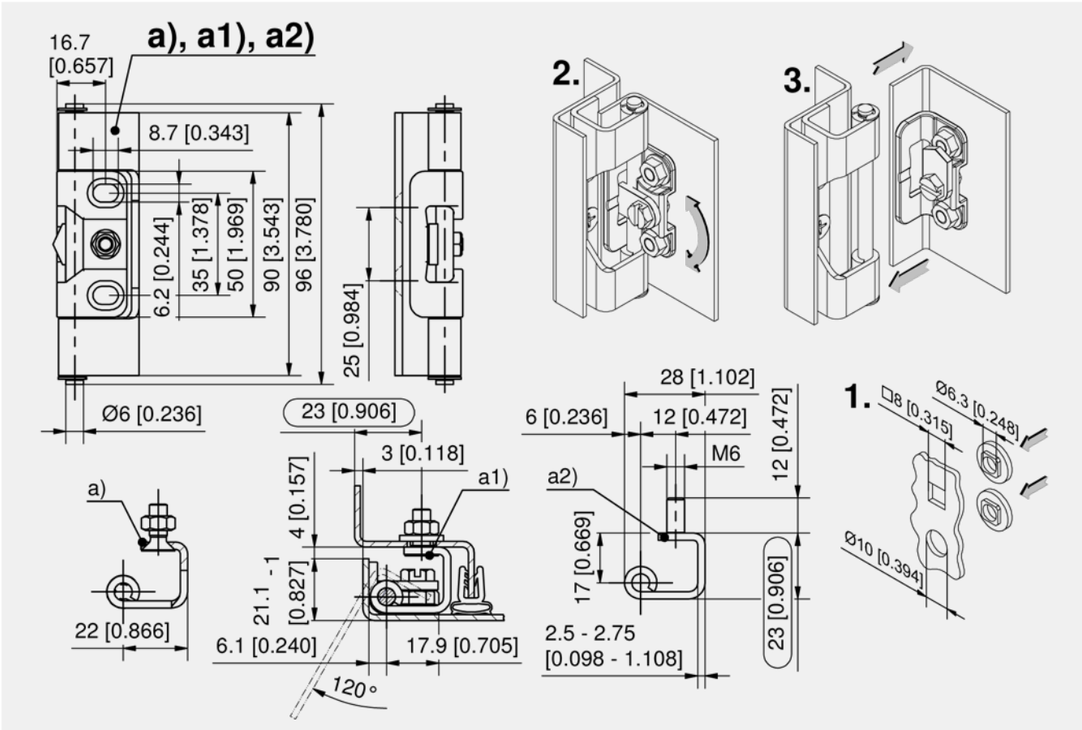

Concealed hinge

	Part Number	Frame-part	cutout in frame	Pin version	Installation type	Delivery Unit
a)	243-9212.00-00000	with countersunk holes for M6	Ø6.3 or M6	with groove incl. locking washer DIN6799	screw-on	10 pcs.
a1)	243-9213.00-00000	with countersunk holes for M6 + fastening washer	□8 or Ø10	with groove incl. locking washer DIN6799	screw-on	10 pcs.
a2)	243-9211.00-00000	with studs for M6	Ø6.3, □8, Ø10	with groove incl. locking washer DIN6799	screw-on	10 pcs.

all product details ▸ on DIRAK.com
7-167

Concealed Hinge Pr03 120°

[4-130]

Advantages

- For surface mounted doors.
- Hinge concealed.
- Door bending 18 mm.
- RH / LH application.
- 120° Opening angle.
- Door-part: screw-on or weld-on.
- Frame-part: screw-on.

Materials

- **Frame-part and pin:** steel, zinc plated
- **Door-part:** steel, untreated

c) and f)

- **O-ring:** NBR

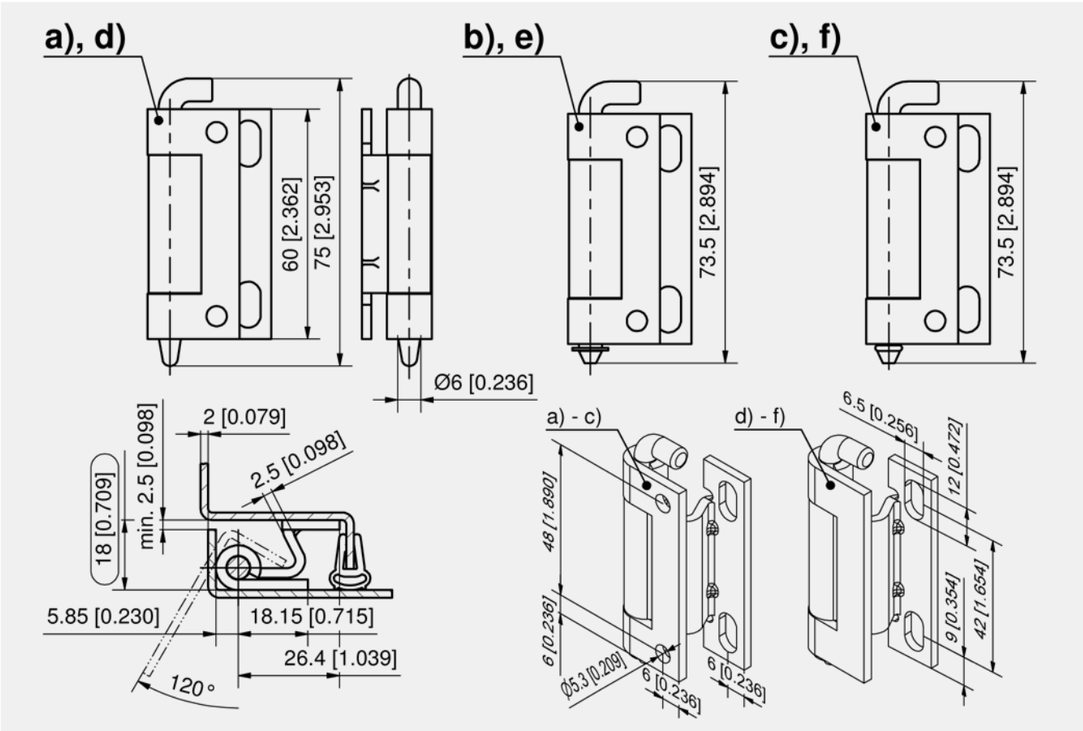

Concealed hinge

	Part Number	Pin version	Installation type door-part	Delivery Unit
a)	216-9003.00-00000	without groove	screw-on	10 pcs.
b)	216-9011.00-00000	with groove incl. locking washer DIN6799	screw-on	10 pcs.
c)	216-9011.00-00001	with groove incl. o-ring	screw-on	10 pcs.
d)	216-9024.00-00000	without groove	weld-on	10 pcs.
e)	216-9025.00-00000	with groove incl. locking washer DIN6799	weld-on	10 pcs.
f)	216-9025.00-00001	with groove incl. o-ring	weld-on	10 pcs.

4-130

◂ all product details on DIRAK.com

Concealed Hinge Pr03 120° Stainless Steel

[7-150]

Advantages

- For surface mounted doors.
- Hinge concealed.
- Door bending 18mm.
- RH / LH application.
- 120° Opening angle.
- Frame-part: screw-on.
- Door-part: weld-on or screw-on.
- The hinge can also be supplied with a self-locking POM pin which can be mounted upside-down for very short enclosures.

Materials

- **Frame-part, pin:** AISI 304
- **Door-part:** AISI 303 or AISI 304
- **Pin:** AISI 303, AISI 304 or POM natural

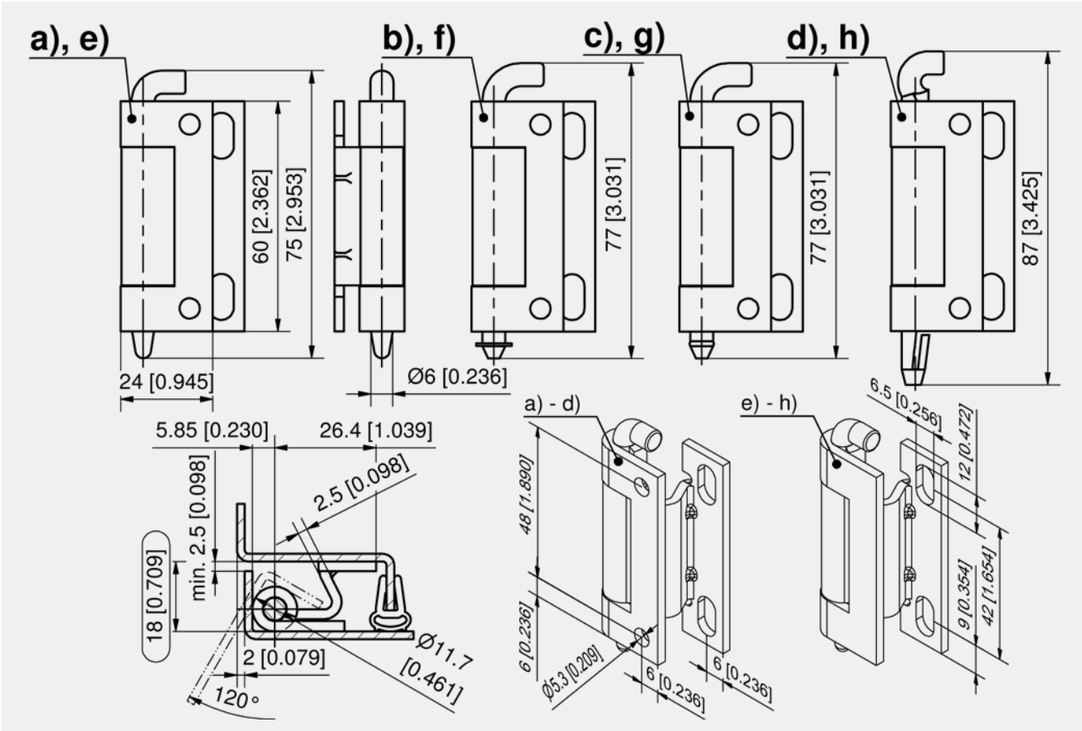

Concealed hinge

	Part Number	Material door-part	Pin version	Material pin	Installation type door-part	Delivery Unit
a)	216-9103.00-00000	AISI 316	without groove	AISI 303	screw-on	10 pcs.
b)	216-9111.00-00000	AISI 304	with groove incl. locking washer DIN6799	AISI 304	screw-on	10 pcs.
c)	216-9111.00-00001	AISI 304	with groove incl. o-ring	AISI 303	screw-on	10 pcs.
d)	216-9105.00-00000	AISI 304	without groove	POM	screw-on	10 pcs.
e)	216-9120.00-00000	AISI 303	without groove	AISI 303	weld-on	10 pcs.
f)	216-9125.00-00000	AISI 303	with groove incl. locking washer DIN6799	AISI 303	weld-on	10 pcs.
g)	216-9125.00-00001	AISI 303	with groove incl. o-ring	AISI 303	weld-on	10 pcs.
h)	216-9123.00-00000	AISI 303	without groove	POM	weld-on	10 pcs.

all product details ▸ on DIRAK.com

7-150

Concealed Hinge Pr03 120°

[4-140]

Advantages

- For surface mounted doors.
- Hinge concealed.
- Door bending 24 mm.
- RH / LH application.
- 120° Opening angle.
- Door-part: screw-on or weld-on.
- Frame-part: screw-on.

Materials

- **Frame-part and pin:** steel, zinc plated
- **Door-part:** steel, untreated

c) and f)

- **O-ring:** NBR

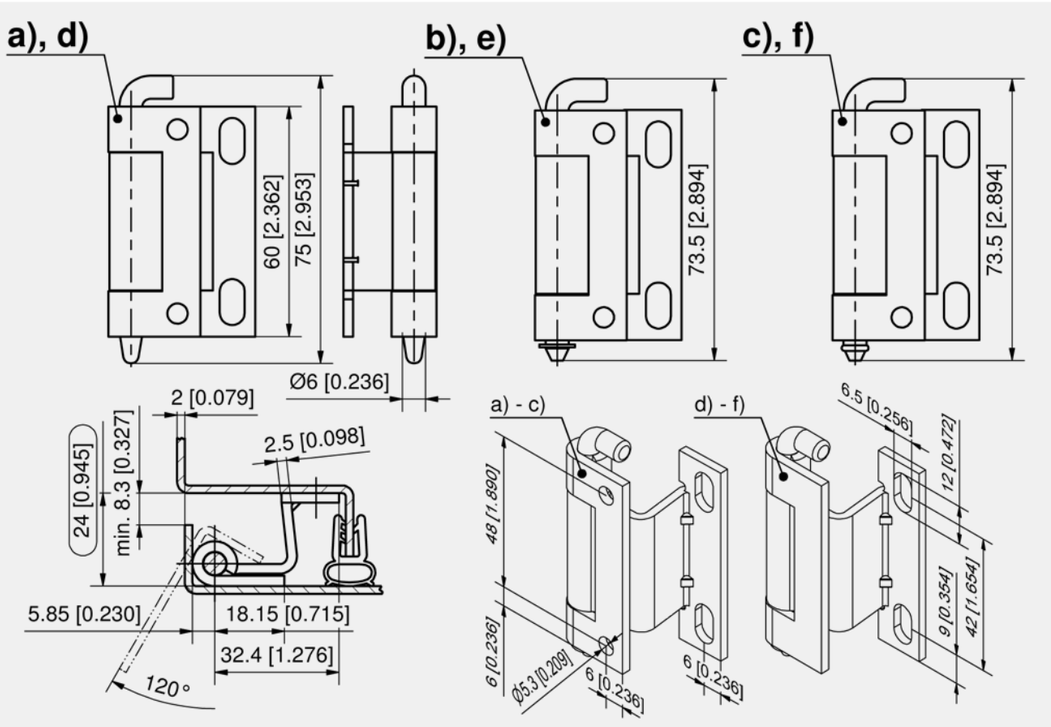

Concealed hinge

	Part Number	Pin version	Installation type door-part	Delivery Unit
a)	216-9004.00-00000	without groove	screw-on	10 pcs.
b)	216-9012.00-00000	with groove incl. locking washer DIN6799	screw-on	10 pcs.
c)	216-9012.00-00001	with groove incl. o-ring	screw-on	10 pcs.
d)	216-9029.00-00000	without groove	weld-on	10 pcs.
e)	216-9028.00-00000	with groove incl. locking washer DIN6799	weld-on	10 pcs.
f)	216-9028.00-00001	with groove incl. o-ring	weld-on	10 pcs.

4-140

◂ all product details on DIRAK.com

Concealed Hinge Pr03 120° Stainless Steel

[7-160]

Advantages

- For surface mounted doors.
- Hinge concealed.
- Door bending 24 mm.
- RH / LH application.
- 120° Opening angle.
- Frame-part: screw-on.
- Door-part: weld-on or screw-on.
- The hinge can also be supplied with a self-locking POM pin which can be mounted upside-down for very short enclosures.

Materials

- **Frame-part and door-part:** AISI 304
- **Pin:** stainless steel or POM natural

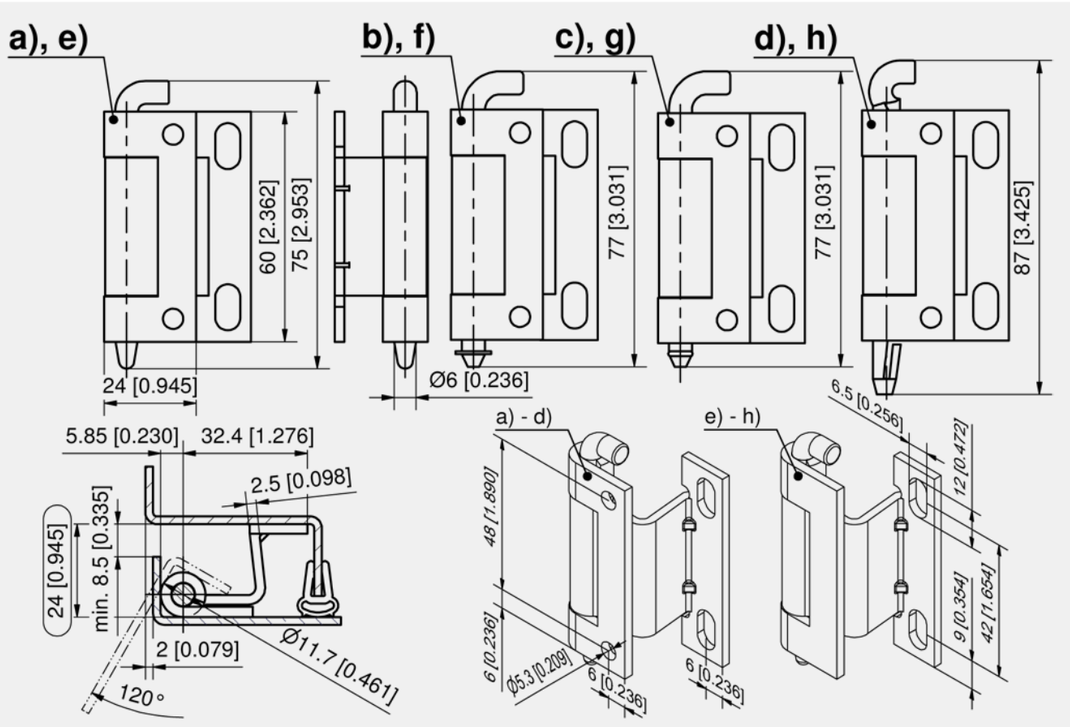

Concealed hinge

	Part Number	Material pin	Pin version	Installation type door-part	Delivery Unit
a)	216-9104.00-00000	stainless steel	without groove	screw-on	10 pcs.
b)	216-9112.00-00002	stainless steel	with groove incl. locking washer DIN6799	screw-on	10 pcs.
c)	216-9112.00-00001	stainless steel	with groove incl. o-ring	screw-on	10 pcs.
d)	216-9106.00-00000	POM	self-locking	screw-on	10 pcs.
e)	216-9122.00-00000	stainless steel	without groove	weld-on	10 pcs.
f)	216-9126.00-00000	stainless steel	with groove incl. locking washer DIN6799	weld-on	10 pcs.
g)	216-9126.00-00001	stainless steel	with groove incl. o-ring	weld-on	10 pcs.
h)	216-9124.00-00000	POM	self-locking	weld-on	10 pcs.

all product details ▸ on DIRAK.com

7-160

Concealed Hinge Pr03 120°

[4-135]

Advantages

- For surface mounted doors.
- Hinge concealed.
- Door bending 23mm.
- RH and LH application.
- 120° Opening angle.
- Two different fastenings on the door.
- Frame-part: screw-on e.g. cross recessed raised cheese head screw M6 DIN EN ISO 7045.

Materials

- **Door-part:** steel, untreated
- **Frame-part and pin:** steel, zinc plated

Remarks

a) door-part to be **weld-on** on the **door leaf**

b) door-part to be **weld-on** on the **door bending**

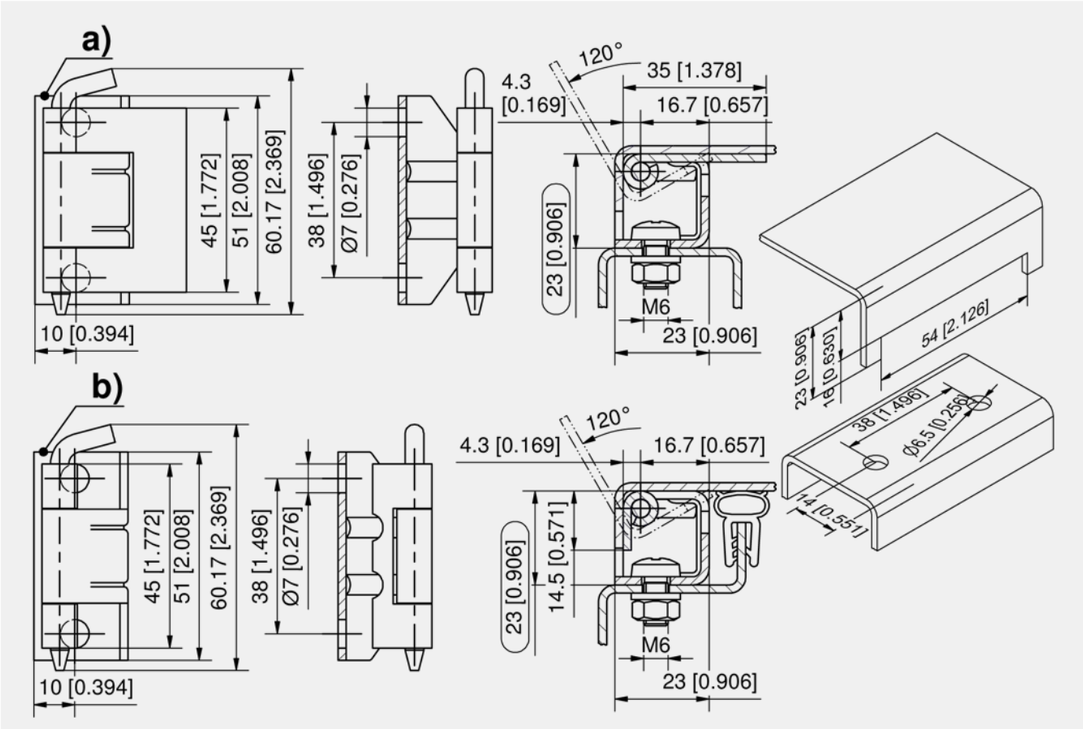

Concealed hinge

	Part Number	Pin version	Installation type	Delivery Unit
a)	216-9008.00-00000	loose	screw- / weld-on	10 pcs.
b)	216-9013.00-00000	loose	screw- / weld-on	10 pcs.

4-135
◂ all product details on DIRAK.com

Corner Hinge two-part Pr04 180°

[4-190]

Advantages

- For surface mounted doors.
- Hinge visible.
- 2 parts.
- 180° Opening angle.

Materials

- **Hinge:** steel, zinc plated, brass untreated
- **Nuts and serrated washers:** steel, zinc plated
- **Bearing washer:** brass, nickel plated
- **Pin:** steel, nickel plated

Remarks

2 nuts and serrated washers are included

Fastening with M6 or M8

1. bearing washer
2. Lift-off mounted
3. non Lift-off mounted

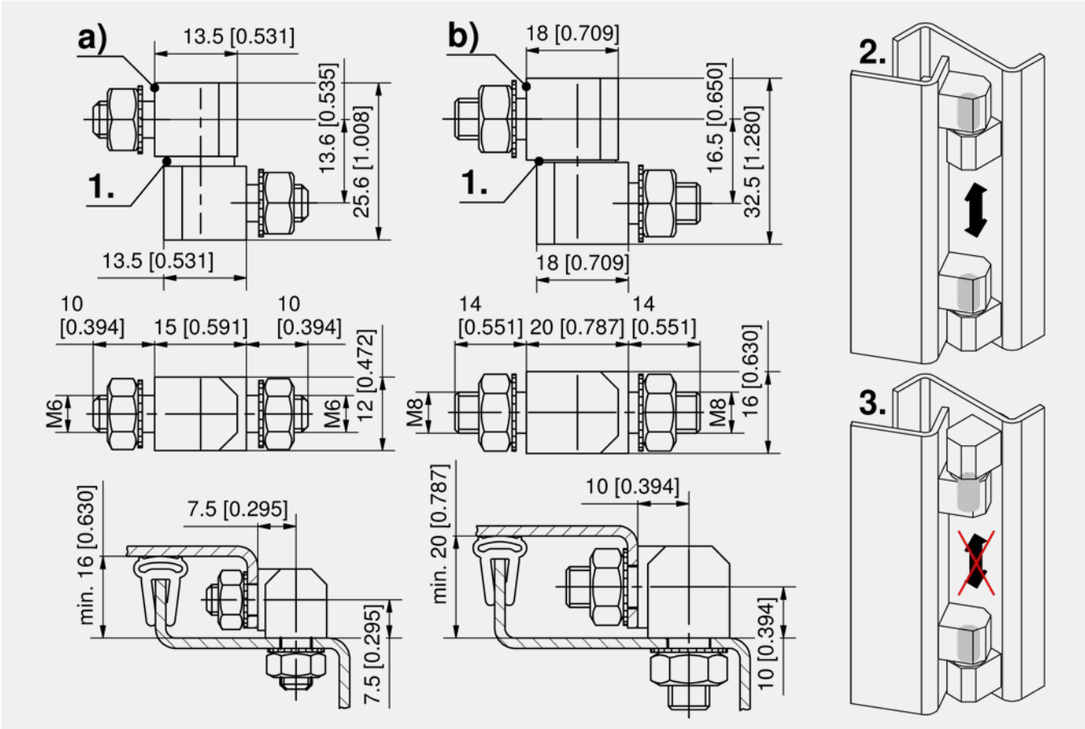

Corner hinge

	Part Number	Material	Surface	Pin version	Installation type	Delivery Unit
a)	219-9005.00-00000	steel	zinc plated	loose	screw-on M6	10 pcs.
b)	219-9111.00-00000	steel	zinc plated	loose	screw-on M8	10 pcs.
b)	219-9112.00-00000	brass	untreated	loose	screw-on M8	10 pcs.

all product details ▸ on DIRAK.com
7-110_7-120

Corner Hinge three-part Pr04 180°

[4-200]

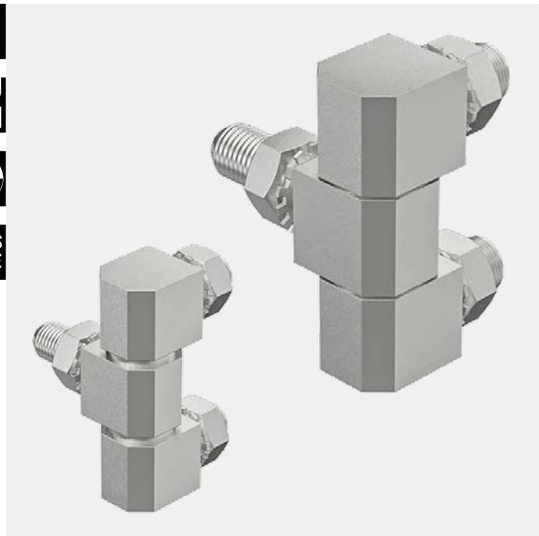

Advantages

- For surface mounted door.
- Hinge visible.
- 3-part.
- RH / LH application.
- 180° Opening angle.

Materials

- **Hinge:** steel, zinc plated, brass, untreated
- **Nut and washer:** steel, zinc plated
- **Bearing washer:** brass, nickel plated
- **Pin:** steel, nickel plated

Remarks

3 nuts and serrated washers are included.

Fastening M6 or. M8

Not lift-off

1. bearing washer

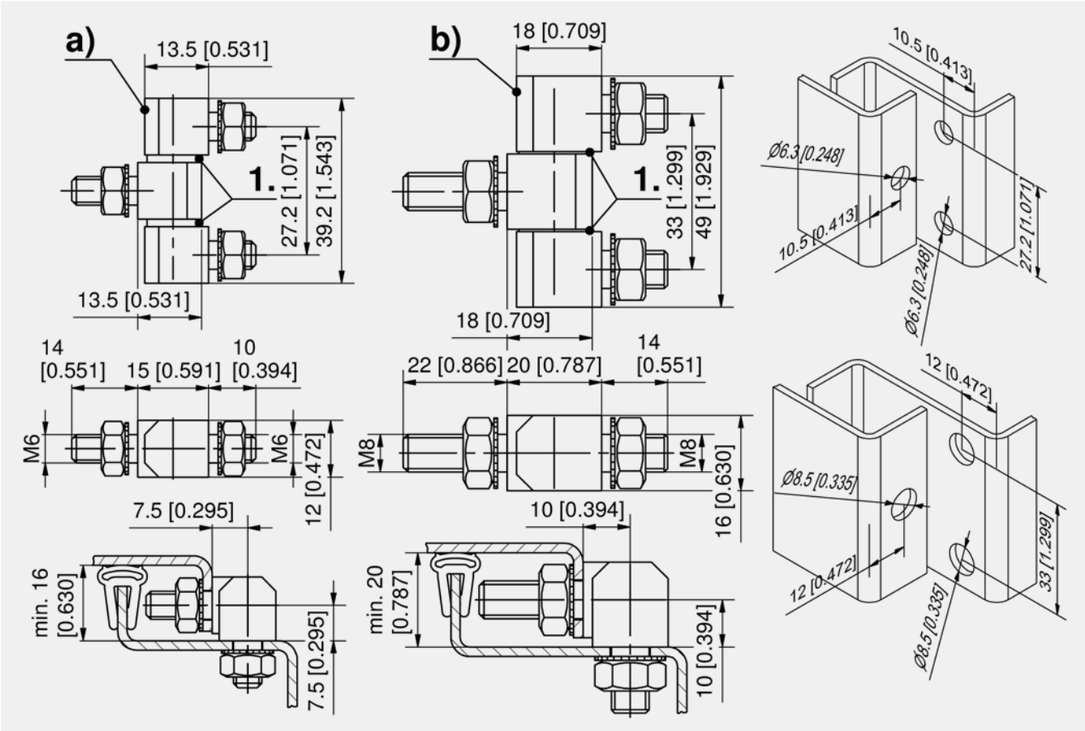

Corner hinge

	Part Number	Material	Surface	Pin version	Installation type	Delivery Unit
a)	219-9001.00-00000	steel	zinc plated	loose	screw-on M6	10 pcs.
b)	219-9101.00-00000	steel	zinc plated	loose	screw-on M8	10 pcs.
b)	219-9106.00-00000	brass	untreated	loose	screw-on M8	10 pcs.

4-190

◂ all product details on DIRAK.com

Corner Hinge Pr04 180° Stainless Steel

[7-110_7-120]

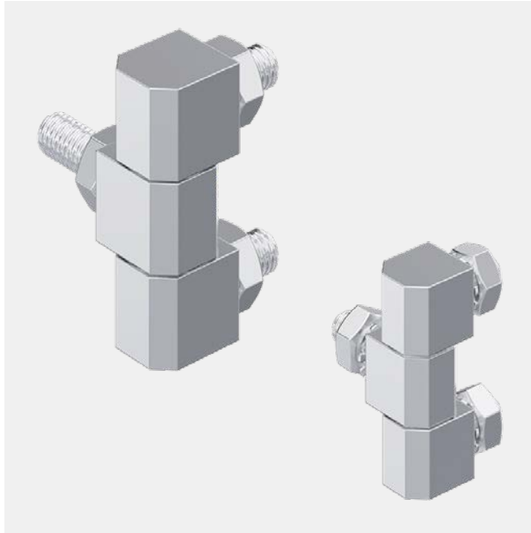

Advantages

- For surface mounted doors.
- Hinge visible.
- 180° Opening angle.

Materials

- **Hinge:** AISI 304

Remarks

3 nuts and serrated washers are included.

Fastening M6 or M8.

1. bearing washers

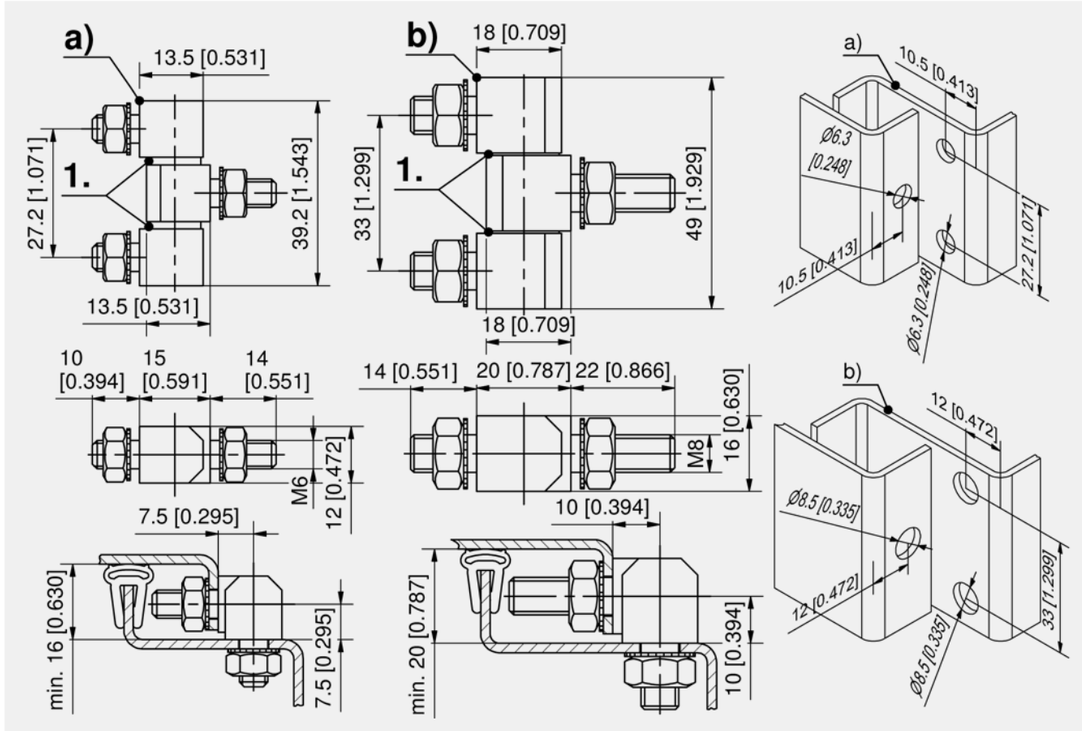

Corner hinge

	Part Number	Pin version	Installation type	Delivery Unit
a)	219-9002.00-00000	loose	screw-on M6	10 pcs.
b)	219-9105.00-00000	loose	screw-on M8	10 pcs.

all product details ▸ on DIRAK.com

4-200

Corner Hinge Pr04 180° Tempered Steel

[4-220]

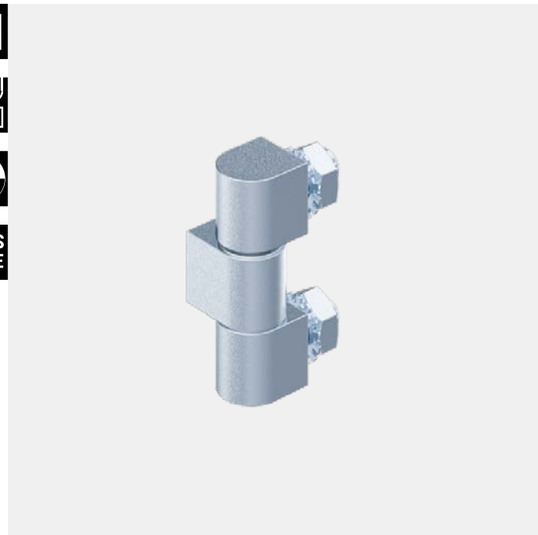

Advantages

- Screw-on hinge for explosion-tight doors.
- For surface mounted doors.
- Hinge visible.
- RH / LH application.
- 180° Opening angle.

Materials

- **Hinge:** tempered steel, zinc plated
- **Washer:** brass, nickel plated
- **Nut and serrated washer:** steel, zinc plated
- **Pin:** steel, nickel plated

Remarks

1. washer
2. nuts M8 and serrated washers are included
3. stud bolt, nut and serrated washer M10 are **not** included

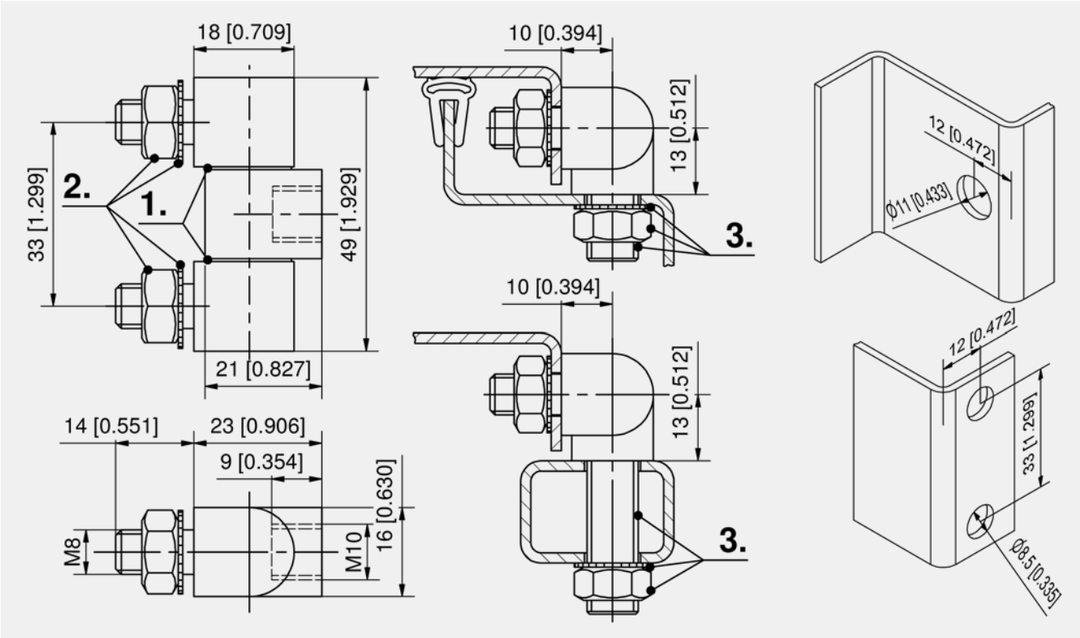

Corner hinge

Part Number	Pin version	Installation type	Delivery Unit
219-9201.00-00000	loose	screw-on	10 pcs.

4-220
◂ all product details on DIRAK.com

Corner Hinge Pr04 180°

[4-284]

Advantages

- Corner hinge, screw-on or weld-on.
- For surface mounted doors.
- Hinge visible.
- RH / LH application.
- 180° Opening angle.
- Door is lift-off.

Materials

- **Hinge-parts:** steel, zinc plated
- **Covers:** AISI 301

Remarks

The covers **1.** for version a) and b) have sharp edges.

We only show the 4 most common versions.

Other versions on request.

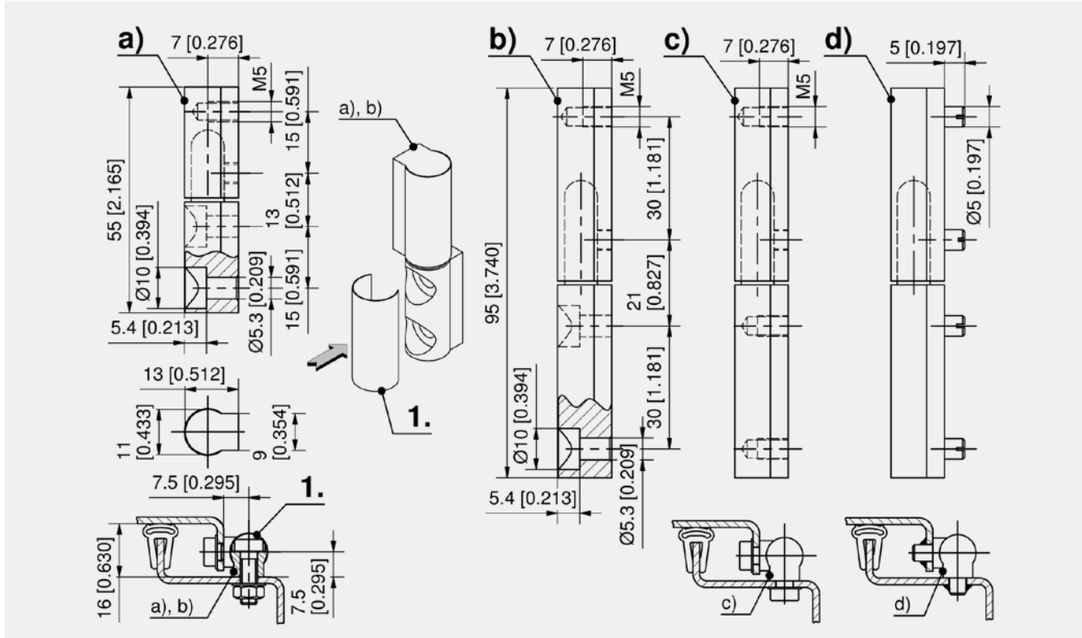

Corner hinge with threaded stubs M5 + drilled holes 5.3mm

	Part Number	Length	Version	Pin version	Installation type	Delivery Unit
a)	242-9001.00-00000	55 mm	2 caps	cast-on	screw-on	10 pcs.
b)	242-9103.00-00000	95 mm	2 caps	cast-on	screw-on	10 pcs.

Corner hinge with threaded stubs M5

	Part Number	Length	Pin version	Installation type	Delivery Unit
c)	242-9101.00-00000	95 mm	cast-on	screw-on	10 pcs.

Corner hinge with weld stud

	Part Number	Length	Pin version	Installation type	Delivery Unit
d)	242-9102.00-00000	95 mm	cast-on	weld-on	10 pcs.

all product details ▸ on DIRAK.com
4-284

Corner Hinge Pr04 180°

[4-282]

Advantages

- For surface mounted doors.
- Hinge visible.
- RH / LH application.
- 180° Opening angle.
- Lift-off.
- Screw-on.

Materials

- **Hinge-parts:** zinc die, black
- **Pin, screws and lockwasher:** steel, zinc plated

Remarks

1. 4 screws M4x6 DIN84 and 4 lockwashers A4 DIN127 are included.

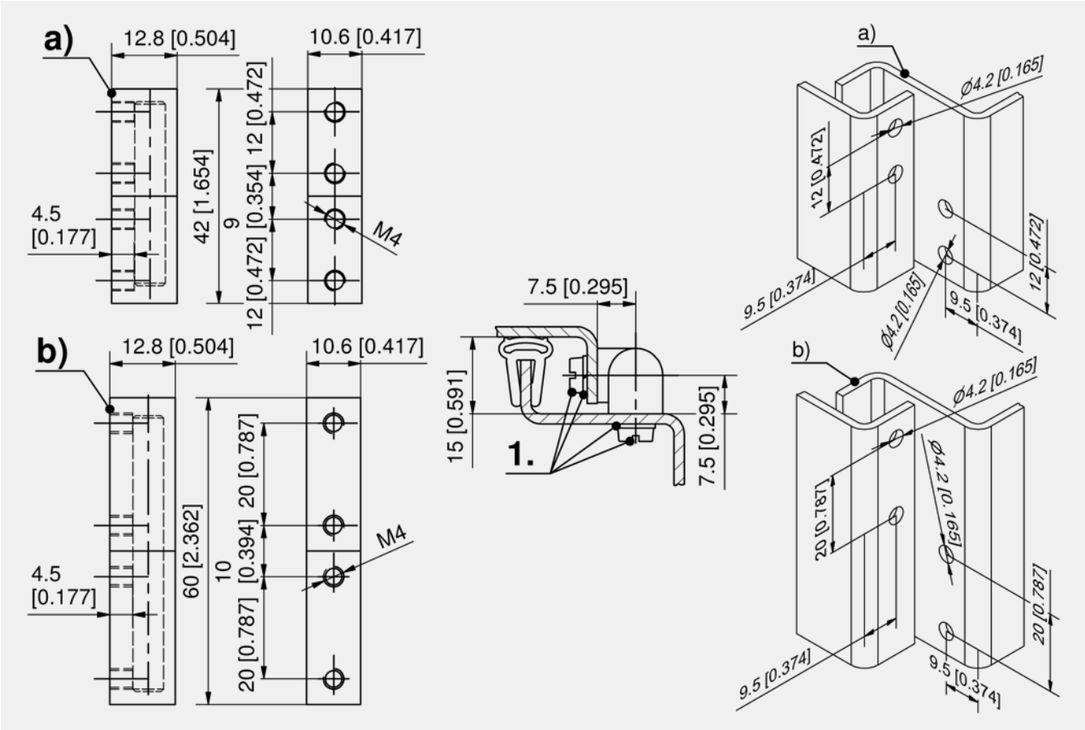

Corner hinge

	Part Number	Length L	Pin version	Installation type	Delivery Unit
a)	224-9101.00-00000	42 mm	loose	screw-on	10 pcs.
b)	224-9102.00-00000	60 mm	loose	screw-on	10 pcs.

4-282

◂ all product details on DIRAK.com

Corner Hinge Pr04 180°

[4-280]

Advantages

- For surface mounted doors.
- Hinge visible.
- RH / LH application.
- 180° Opening angle.
- Lift-off.
- A conductive connection between door and frame can be established by using screws M5x15 and serrated lock washers DIN 6798.
- Plastic coated.
- Durable threaded holes through molded in metal inserts.
- Corrosion-resistant by stainless steel pin.

Materials

- **Hinge-parts:** PA, black
- **Metal inserts:** steel, untreated
- **Pin:** stainless steel

Remarks

1. attention: screw M5 should **not** touch the pin!
2. screw M5 should touch the pin, as conductive connection
3. metal insert

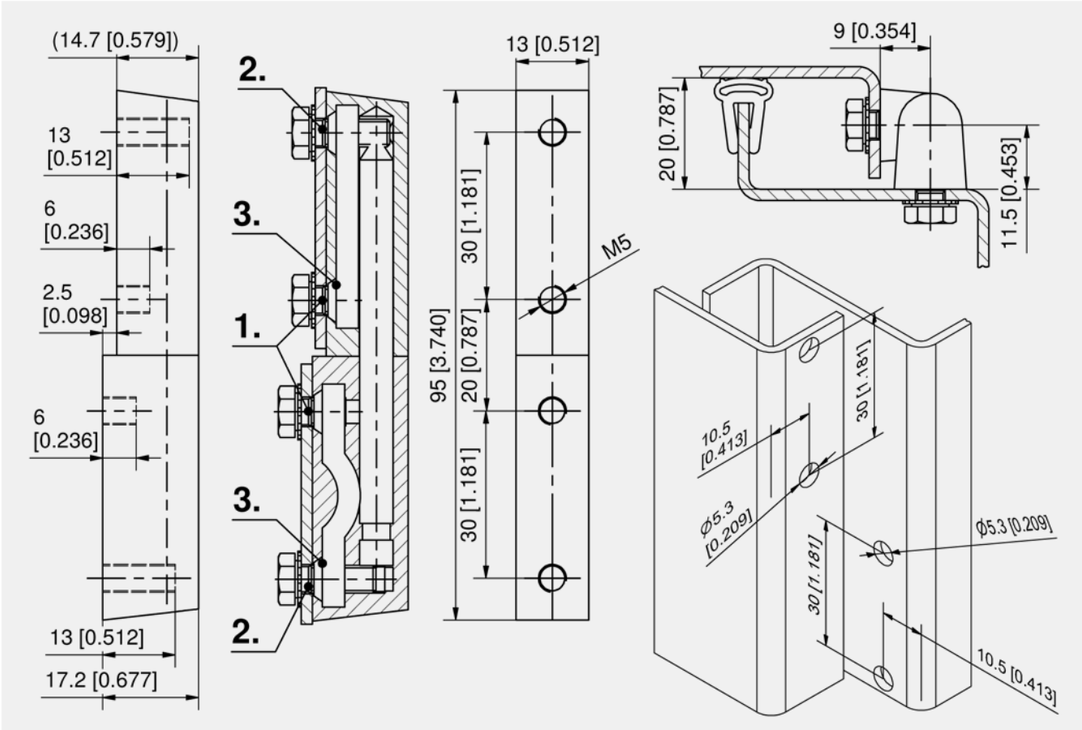

Corner hinge

Part Number	Length L	Pin version	Installation type	Delivery Unit
224-9001.00-00000	95 mm	cast-on	screw-on	10 pcs.

all product details ▸ on DIRAK.com

4-280

Corner Hinge Pr04 180°

[4-283]

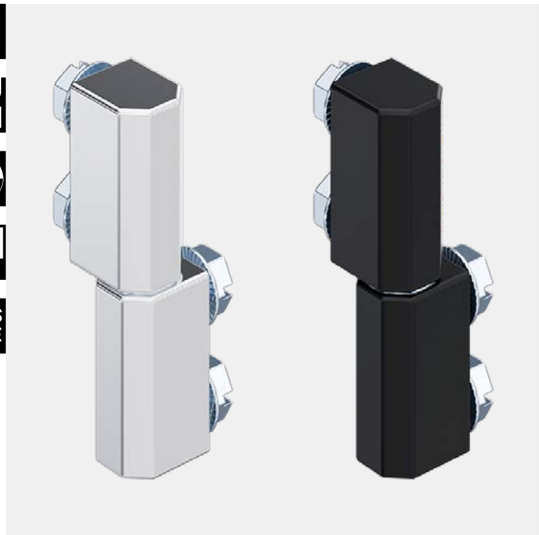

Advantages

- For surface-mounted doors.
- Hinge visible.
- RH / LH application.
- 180° Opening angle.
- Lift-off.

Materials

- **Hinge:** zinc die, glossy chrome plated or black
- **Spacer:** PTFE Teflon

Remarks

1. 4 self-locking screws M5x6 are included.
2. spacer

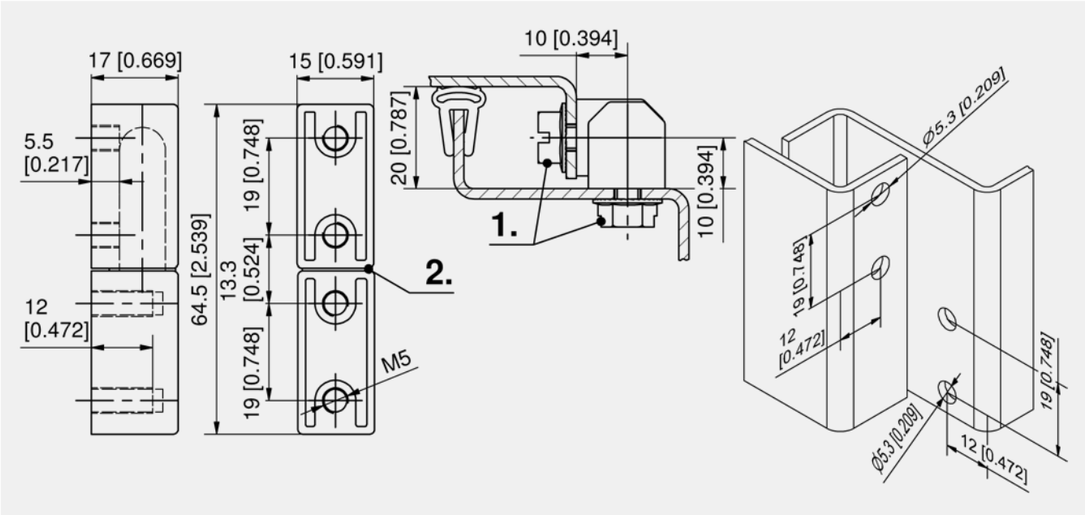

Corner hinge, zinc die

Part Number	Surface	Pin version	Installation type	Delivery Unit
224-9104.00-00000	black	cast-on	screw-on	10 pcs.
224-9105.00-00000	glossy chrome plated	cast-on	screw-on	10 pcs.

4-283
all product details on DIRAK.com

DST Corner Hinge Pr04 180°

[4-283DST]

Advantages

- Corner hinge with DIRAK-SNAP-Technology
- For surface mounted doors.
- Hinge visible.
- RH / LH application.
- 180° Opening angle.
- Tool-less installation.
- Lift-off.
- The installation of the frame-part and door-part is achieved by a simple push into the appropriate cutouts.

Materials

- **Hinge-parts:** zinc die, matt black
- **Pin cast-on:** zinc die
- **For heavy duty, solid pin, pressed in:** stainless steel
- **Spacer:** Teflon, black
- **Snap wedges:** sintered steel

Remarks

1. spacer

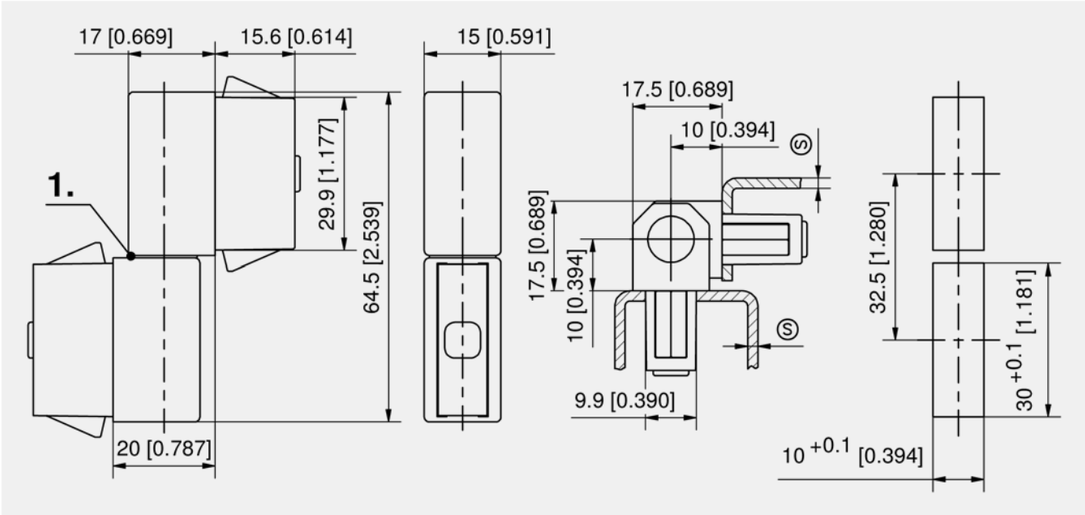

Corner hinge

Part Number	Clamping range (S)	Material pin	Pin version	Installation type	Delivery Unit
417-9004.00-00010	0.7 - 1.2 mm	zinc die	cast-on	tool-less	10 pcs.
417-9004.00-00015	1.2 - 1.7 mm	zinc die	cast-on	tool-less	10 pcs.
417-9004.00-00020	1.7 - 2.2 mm	zinc die	cast-on	tool-less	10 pcs.
417-9004.00-00030	2.7 - 3.2 mm	zinc die	cast-on	tool-less	10 pcs.
417-9009.00-00010	0.7 - 1.2 mm	stainless steel	pressed in	tool-less	10 pcs.
417-9009.00-00015	1.2 - 1.7 mm	stainless steel	pressed in	tool-less	10 pcs.
417-9009.00-00020	1.7 - 2.2 mm	stainless steel	pressed in	tool-less	10 pcs.
417-9009.00-00030	2.7 - 3.2 mm	stainless steel	pressed in	tool-less	10 pcs.

	Accessories
764	292-0306.80-02530 **Tool for uninstallation**
762	292-0401.00-03010 **Cutout-cover**
763	292-0702.15-01030 **Reinforcement plate for cutout**

all product details on DIRAK.com
4-283DST

Corner Hinge Pr04 180°

[4-285]

Advantages

- For surface mounted doors.
- Hinge visible.
- RH / LH application.
- 180° Opening angle.
- Lift-off.

Materials

- **Hinge:** zinc die, black
- **Other surfaces on request.**
- **Pin:** stainless steel

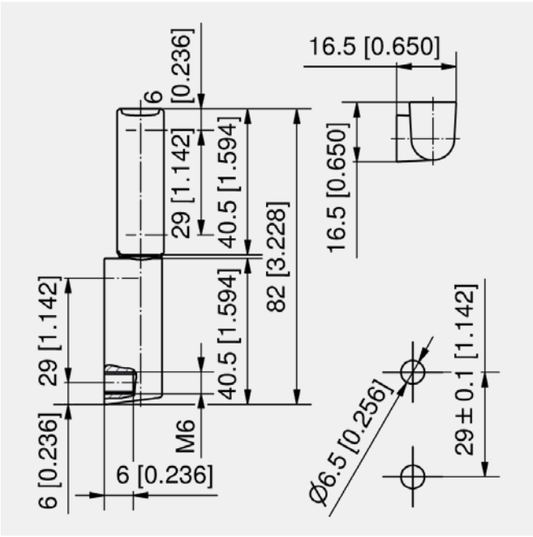

Corner hinge

Part Number	Length	Pin version	Installation type	Delivery Unit
224-9008.00-00000	82 mm	pressed in	screw-on	10 pcs.

Corner Hinge Pr04 180°

[4-285.01]

Advantages

- For surface mounted doors.
- Hinge visible.
- For heavy applications.
- RH / LH application.
- 180° Opening angle.
- Lift-off.

Materials

- **Hinge:** zinc die, black
- **Other surfaces on request!**
- **Pin:** stainless steel

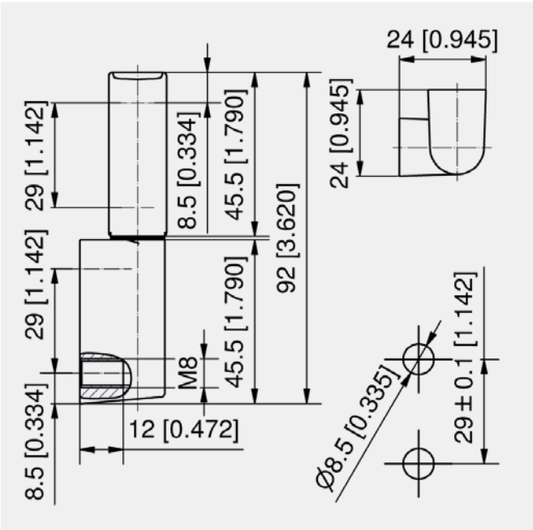

Corner hinge

Part Number	Length	Pin version	Installation type	Delivery Unit
224-9012.00-00000	92 mm	pressed in	screw-on	10 pcs.

Corner Hinge Pr04 180° Stainless Steel

[7-210]

Advantages

- For surface-mounted doors.
- Hinge visible.
- RH / LH application.
- 180° Opening angle.
- Lift-off.
- The sloping ends prevent the deposit of dust or dirt.

Materials

- **Hinge completely:** AISI 316

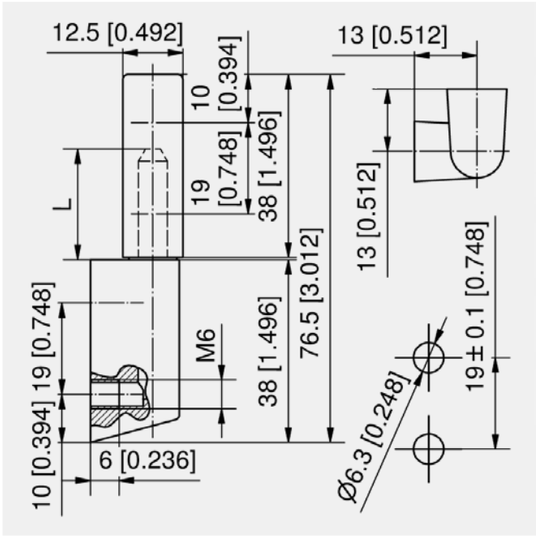

Corner hinge

Part Number	Pin length L	Pin version	Installation type	Delivery Unit
224-9003.00-00000	23 mm	pressed in	screw-on	10 pcs.
224-9005.00-00000	17.6 mm	pressed in	screw-on	10 pcs.

Corner Hinge Pr04 180° Stainless Steel

[7-211]

Advantages

- For surface mounted doors.
- Hinge visible.
- RH / LH application.
- 180° Opening angle.
- Screw-on.
- Lift-off.

Materials

- **Corner hinge:** AISI 316, satin polished
- **Pin:** stainless steel

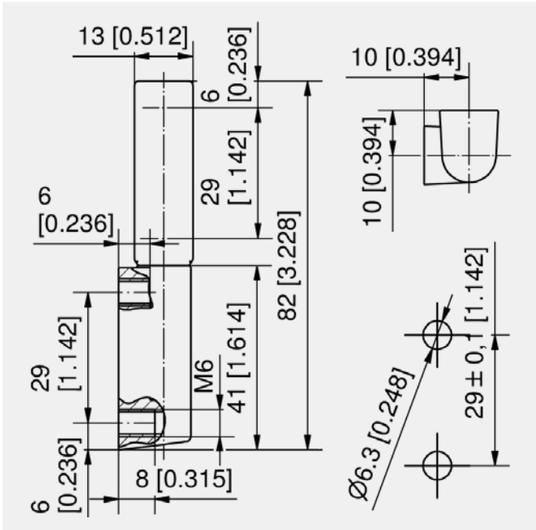

Corner hinge

Part Number	Length L	Pin version	Installation type	Delivery Unit
224-9201.00-00000	82 mm	pressed in	screw-on	10 pcs.

DST Corner Hinge Pr04 180°

[4-285DST]

Advantages

- For surface mounted doors.
- Hinge visible.
- RH / LH application.
- 180° Opening angle.
- Lift-off.
- IP65 according to DIN EN 60529.
- **Version a)** for tool-less installation via a simple clip-in into the cutout.
- **Version b)** for screw-on / clip-in installation. One hinge half is fixed by screws M6, the other hinge half will be assembled via a simple clip-in into the cutout.

Materials

- **Hinge:** zinc die, matt black
- **Nickel plated and chrome plated on request.**
- **Pin:** stainless steel
- **Snap wedges:** sintered steel

Remarks

Other versions DST/screw-on on request. Please contact DIRAK.

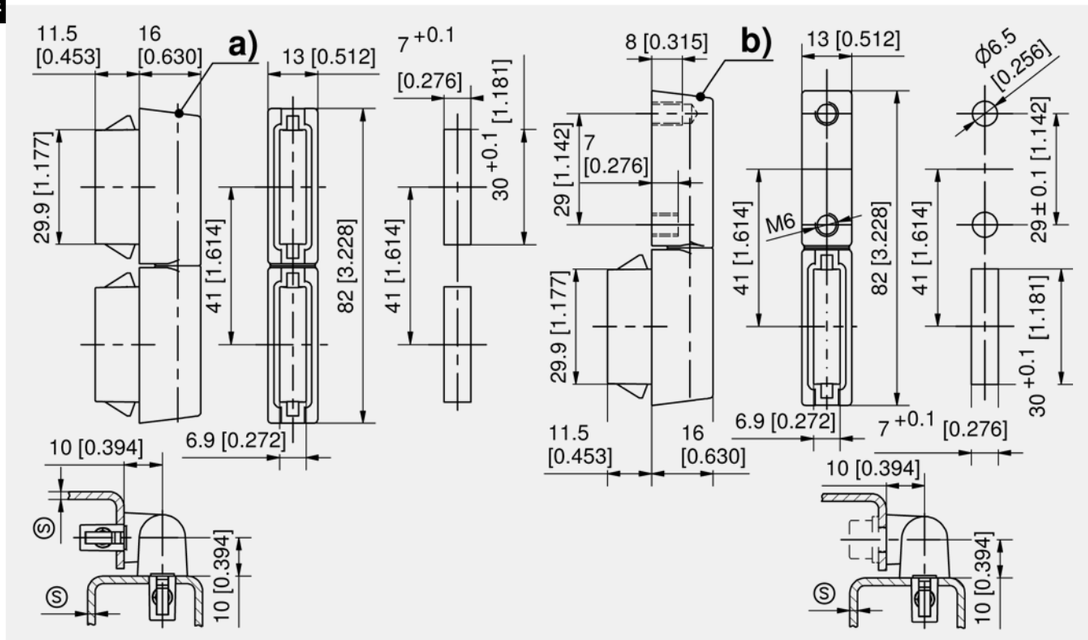

Corner hinge

	Part Number	Clamping range (S)	Pin version	Installation type	Delivery Unit
a)	417-9015.00-00012	0.8 - 1.5 mm	pressed in	tool-less	10 pcs.
a)	417-9015.00-00016	1.3 - 2.0 mm	pressed in	tool-less	10 pcs.
a)	417-9015.00-00019	1.5 - 2.2 mm	pressed in	tool-less	10 pcs.
a)	417-9015.00-00026	2.3 - 3.0 mm	pressed in	tool-less	10 pcs.
b)	417-9017.00-00012	0.8 - 1.5 mm	pressed in	tool-less / screw-on	10 pcs.
b)	417-9017.00-00016	1.3 - 2.0 mm	pressed in	tool-less / screw-on	10 pcs.
b)	417-9017.00-00019	1.5 - 2.2 mm	pressed in	tool-less / screw-on	10 pcs.
b)	417-9017.00-00026	2.3 - 3.0 mm	pressed in	tool-less / screw-on	10 pcs.

	Accessories
764	292-0306.80-02530 **Tool for uninstallation**
762	292-0401.00-03007 **Cutout-cover**
763	292-0702.15-01030 **Reinforcement plate for cutout**

4-285DST

◂ all product details on DIRAK.com

DST Corner Hinge Pr04 180° Stainless steel

[7-285DST]

Advantages

- Elegant corner hinge for surface mounted doors.
- Hinge visible.
- Lift-off.
- RH / LH application.
- 180° Opening angle.
- IP65 according to DIN EN 60529.
- **Version a)** for tool-less installation. Assembly via a simple clip-in into the cutout.
- **Version b)** for screw-on / clip-in installation. One hinge half is fixed by screws M6, the other hinge half will be assembled via a simple clip-in into the cutout.

Materials

- **Corner hinge:** AISI 316
- **Pin:** AISI 303
- **Snap wedges:** stainless steel
- **O-ring:** NBR/ black

Remarks

Other versions DST/screw-on on request. Please contact DIRAK.

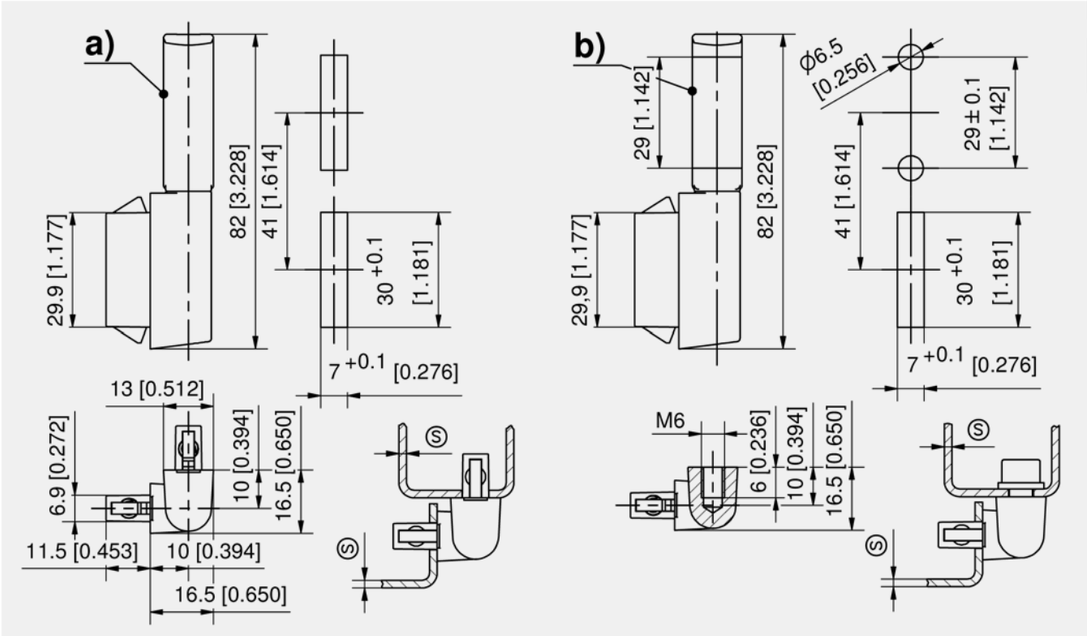

Corner hinge

	Part Number	Clamping range (S)	Pin version	Installation type	Delivery Unit
a)	417-9015.82-00012	0.8 - 1.5 mm	pressed in	tool-less	10 pcs.
a)	417-9015.82-00016	1.3 - 2.0 mm	pressed in	tool-less	10 pcs.
a)	417-9015.82-00021	1.8 - 2.5 mm	pressed in	tool-less	10 pcs.
a)	417-9015.82-00026	2.3 - 3.0 mm	pressed in	tool-less	10 pcs.
b)	417-9017.82-00012	0.8 - 1.5 mm	pressed in	tool-less / screw-on	10 pcs.
b)	417-9017.82-00016	1.3 - 2.0 mm	pressed in	tool-less / screw-on	10 pcs.
b)	417-9017.82-00021	1.8 - 2.5 mm	pressed in	tool-less / screw-on	10 pcs.
b)	417-9017.82-00026	2.3 - 3.0 mm	pressed in	tool-less / screw-on	10 pcs.

	Accessories
764	292-0306.80-02530 **Tool for uninstallation**
762	292-0401.00-03007 **Cutout-cover**
763	292-0702.15-01030 **Reinforcement plate for cutout**

all product details ▸ on DIRAK.com

7-285DST

Corner Hinge Pr04 180°

[4-290]

Advantages

- For surface mounted doors.
- Hinge visible.,
- RH / LH application.
- 180° Opening angle also for adjacent cabinets.
- Door is lift-off.

Materials

- **Hinge-parts:** zinc die, blasted chrome plated or black
- **Pin:** stainless steel

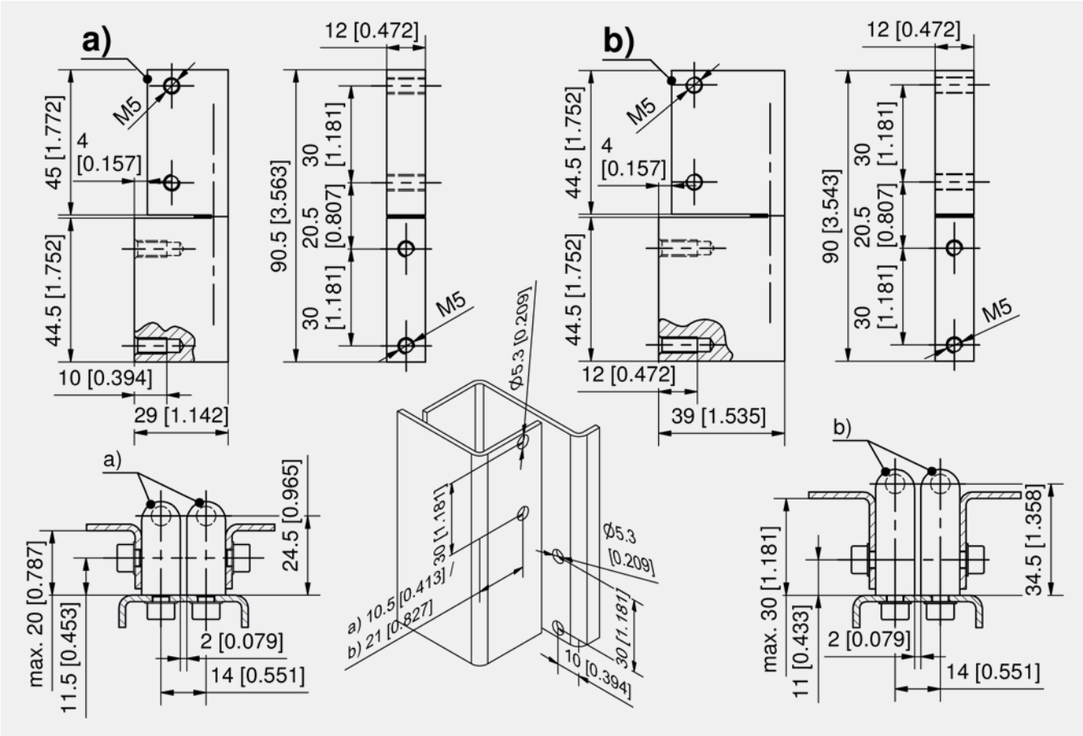

Corner hinge, zinc die

	Part Number	Surface	Height frame-part	Height door-part	for bending	Pin version	Installation type	Delivery Unit
a)	210-9001.00-00000	black	25 mm	29 mm	max. 20mm	pressed in	screw-on	10 pcs.
a)	210-9002.00-00000	blasted chrome plated	25 mm	29 mm	max. 20mm	pressed in	screw-on	10 pcs.
b)	210-9003.00-00000	black	35 mm	39 mm	max. 30mm	pressed in	screw-on	10 pcs.

4-290
all product details on DIRAK.com

Corner Hinge Pr04 180°

[4-286]

Advantages

- For surface mounted doors.
- Hinge visible.
- Lift-off.
- RH / LH application.
- 180° Opening angle.
- Pin pressed-in.
- With teflon spacer for a durable, smooth-running functional reliability.

Materials

- **Hinge:** zinc die, glossy chrome plated, black powdered or untreated
- **Pin:** steel, zinc plated
- **Spacer:** teflon

Remarks

1. spacer

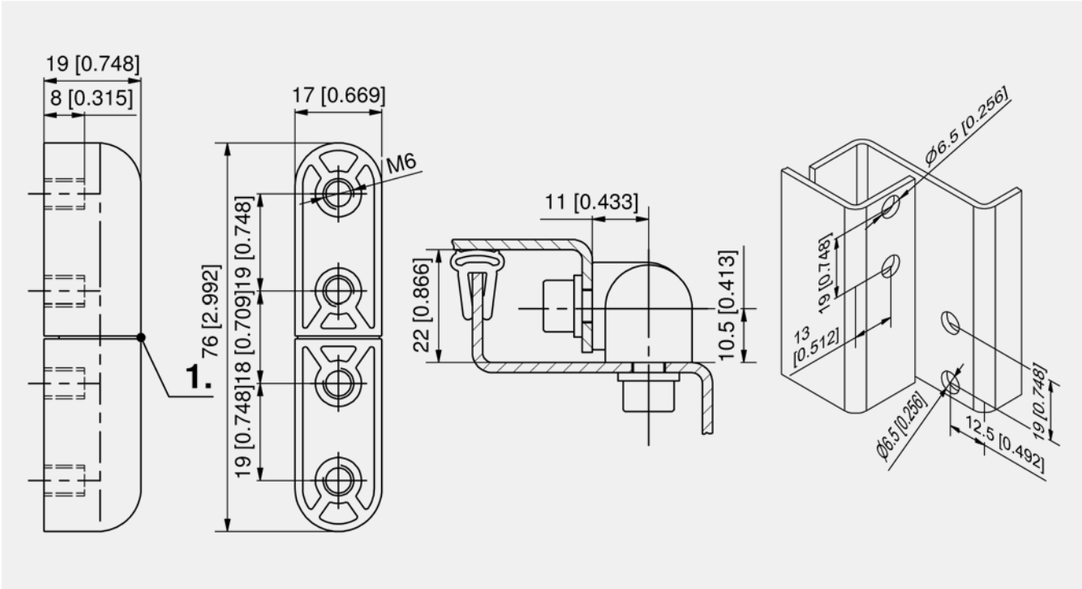

Corner hinge, zinc die

Part Number	Surface	Pin version	Installation type	Delivery Unit
224-9009.00-00000	glossy chrome plated	pressed in	screw-on	10 pcs.
224-9010.00-00000	black	pressed in	screw-on	10 pcs.
224-9011.00-00000	untreated	pressed in	screw-on	10 pcs.

all product details on DIRAK.com
4-286

Corner Hinge Pr04 180°

[4-308]

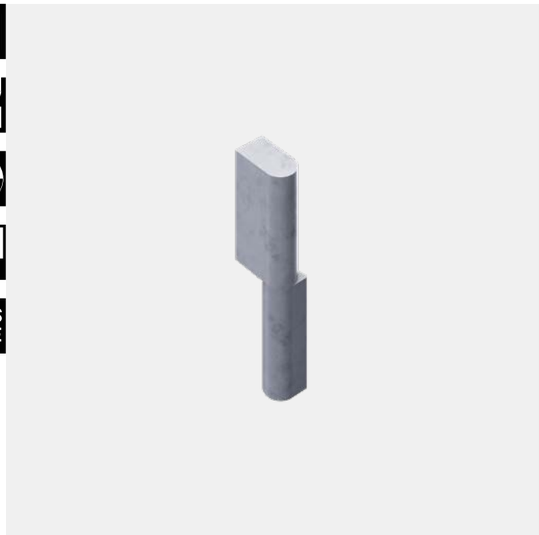

Advantages

- Welded-on corner hinge.
- For surface mounted doors.
- Hinge visible.
- RH / LH application.
- 180° Opening angle.
- Lift-off.

Materials

- **Hinge and pin:** steel, untreated

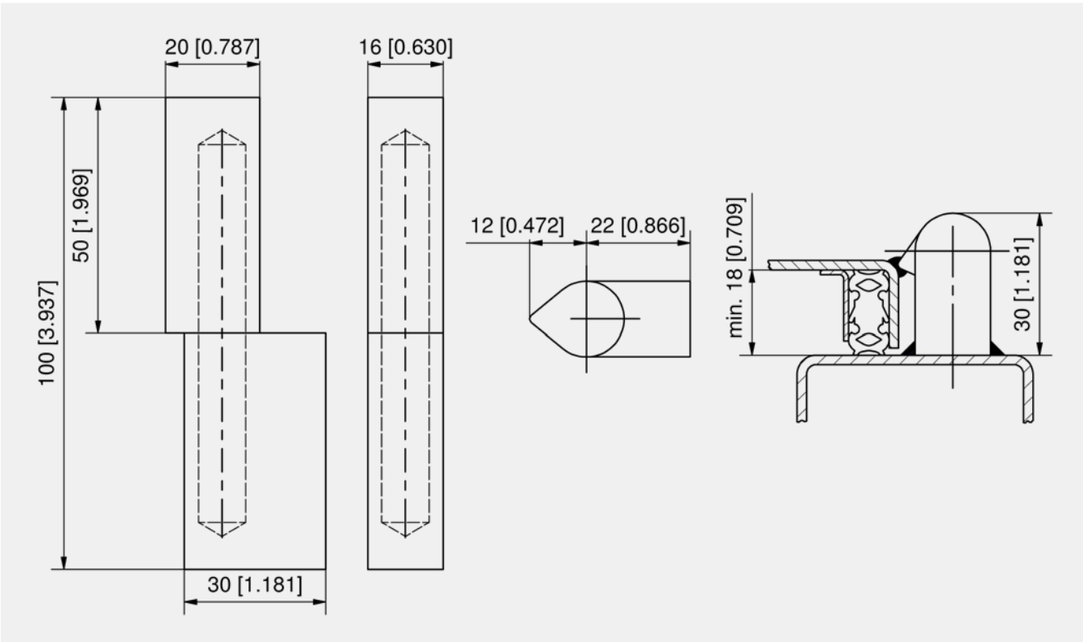

Corner hinge

Part Number	Pin version	Installation type	Delivery Unit
223-9501.00-00000	loose	weld-on	6 pcs.

◂ all product details on DIRAK.com
4-308

Corner Hinge Pr04 180° Stainless Steel

[7-130]

Advantages

- Hinge made from round, stainless steel rod or with drop-shape.
- For surface-mounted doors.
- Hinge visible.
- 180° Opening angle.
- Lift-off.

Materials

- **Hinge:** AISI 304

a) - d)

- **Pin and washer:** AISI 304

e)

- **Pin and washer:** AISI 303

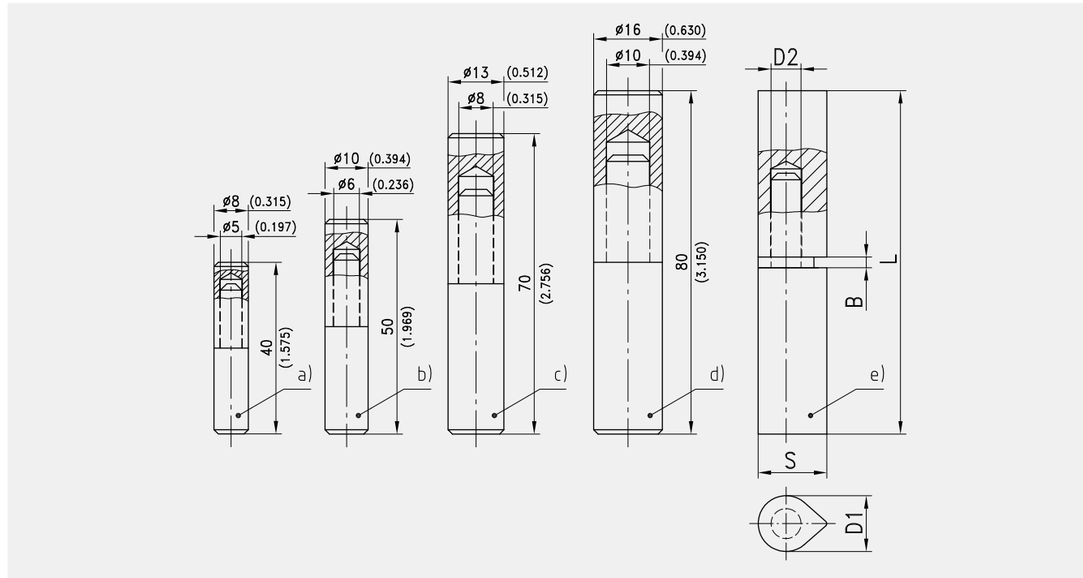

Corner hinge

	Part Number	Dimension	Pin version	Installation type	Delivery Unit
a)	223-9401.00-00000	Ø8 x 40	cast-on	weld-on	10 pcs.
b)	223-9402.00-00000	Ø10 x 50	cast-on	weld-on	10 pcs.
c)	223-9403.00-00000	Ø13 x 70	cast-on	weld-on	10 pcs.
d)	223-9404.00-00000	Ø16 x 80	cast-on	weld-on	10 pcs.

Corner hinge with weld-on drop

	Part Number	L	D1	S	B	D2	Pin version	Installation type	Delivery Unit
e)	223-9601.00-00000	60 mm	10 mm	12.4 mm	2 mm	6 mm	pressed in	weld-on	10 pcs.
e)	223-9602.00-00000	80 mm	13 mm	16 mm	2.5 mm	7 mm	pressed in	weld-on	10 pcs.
e)	223-9603.00-00000	100 mm	16 mm	20 mm	3 mm	9 mm	pressed in	weld-on	10 pcs.
e)	223-9604.00-00000	120 mm	16 mm	20 mm	3 mm	9 mm	pressed in	weld-on	10 pcs.

all product details ▸ on DIRAK.com
7-130

Corner Hinge Pr04 180°

[4-310]

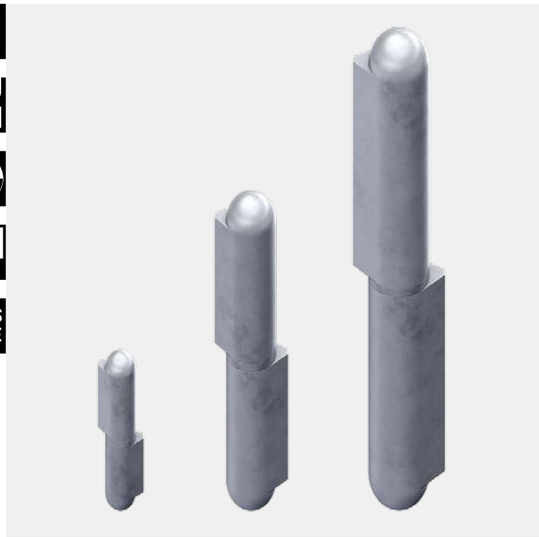

Advantages

- Corner hinge for electro-welding.
- Profile with pointed arch and weld-on nose.
- For surface mounted doors.
- Hinge visible.
- RH / LH application.
- 180° Opening angle.
- Lift-off.

Materials

- **Hinge-parts:** steel, untreated
- **Pin:** steel or brass
- **Washer:** brass

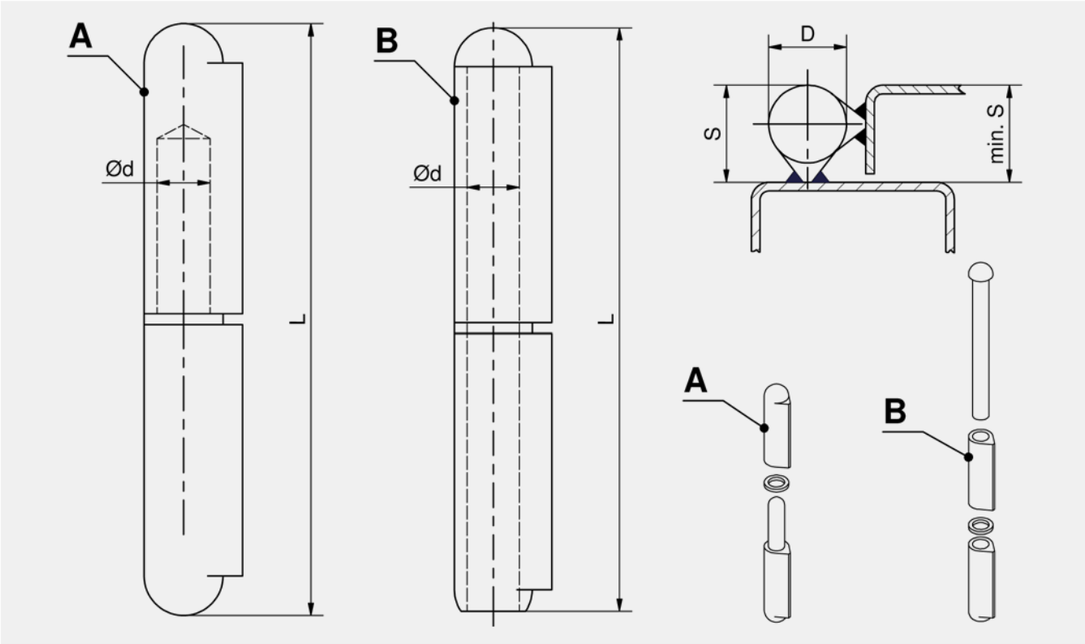

Corner hinge, version A with fixed pin

Part Number	Length	Dimension S	Ø Knurl D	Material pin	Pin version	Ø Pin d	Installation type	Delivery Unit
223-9001.00-00000	40 mm	10 mm	8 mm	steel	fixed	5 mm	weld-on	10 pcs.
223-9002.00-00000	50 mm	10 mm	8 mm	steel	fixed	5 mm	weld-on	10 pcs.
223-9003.00-00000	60 mm	12 mm	10 mm	steel	fixed	6 mm	weld-on	10 pcs.
223-9004.00-00000	70 mm	12 mm	10 mm	steel	fixed	6 mm	weld-on	10 pcs.
223-9005.00-00000	80 mm	16 mm	13 mm	steel	fixed	8 mm	weld-on	10 pcs.
223-9006.00-00000	90 mm	16 mm	13 mm	steel	fixed	8 mm	weld-on	10 pcs.
223-9007.00-00000	100 mm	20 mm	16 mm	steel	fixed	10 mm	weld-on	10 pcs.
223-9008.00-00000	120 mm	20 mm	16 mm	steel	fixed	10 mm	weld-on	10 pcs.
223-9009.00-00000	135 mm	22.5 mm	18 mm	steel	fixed	12 mm	weld-on	10 pcs.
223-9010.00-00000	150 mm	25.5 mm	20 mm	steel	fixed	13 mm	weld-on	10 pcs.
223-9011.00-00000	180 mm	25.5 mm	20 mm	steel	fixed	13 mm	weld-on	10 pcs.
223-9012.00-00000	200 mm	29 mm	23 mm	steel	fixed	16 mm	weld-on	10 pcs.
223-9101.00-00000	40 mm	10 mm	8 mm	brass	fixed	5 mm	weld-on	10 pcs.
223-9102.00-00000	50 mm	10 mm	8 mm	brass	fixed	5 mm	weld-on	10 pcs.
223-9103.00-00000	60 mm	12 mm	10 mm	brass	fixed	6 mm	weld-on	10 pcs.
223-9104.00-00000	70 mm	12 mm	10 mm	brass	fixed	6 mm	weld-on	10 pcs.
223-9105.00-00000	80 mm	16 mm	13 mm	brass	fixed	8 mm	weld-on	10 pcs.
223-9106.00-00000	90 mm	16 mm	13 mm	brass	fixed	8 mm	weld-on	10 pcs.
223-9107.00-00000	100 mm	20 mm	16 mm	brass	fixed	10 mm	weld-on	10 pcs.
223-9108.00-00000	120 mm	20 mm	16 mm	brass	fixed	10 mm	weld-on	10 pcs.
223-9109.00-00000	135 mm	22.5 mm	18 mm	brass	fixed	12 mm	weld-on	10 pcs.
223-9110.00-00000	150 mm	25.5 mm	20 mm	brass	fixed	13 mm	weld-on	10 pcs.
223-9111.00-00000	180 mm	25.5 mm	20 mm	brass	fixed	13 mm	weld-on	10 pcs.
223-9112.00-00000	200 mm	29 mm	23 mm	brass	fixed	16 mm	weld-on	10 pcs.

Corner hinge, version B with loose pin

Part Number	Length	Dimension S	Ø Knurl D	Material pin	Pin version	Ø Pin d	Installation type	Delivery Unit
223-9201.00-00000	40 mm	10 mm	8 mm	steel	loose	5 mm	weld-on	10 pcs.
223-9202.00-00000	50 mm	10 mm	8 mm	steel	loose	5 mm	weld-on	10 pcs.
223-9203.00-00000	60 mm	12 mm	10 mm	steel	loose	6 mm	weld-on	10 pcs.
223-9204.00-00000	70 mm	12 mm	10 mm	steel	loose	6 mm	weld-on	10 pcs.
223-9205.00-00000	80 mm	16 mm	13 mm	steel	loose	8 mm	weld-on	10 pcs.
223-9206.00-00000	90 mm	16 mm	13 mm	steel	loose	8 mm	weld-on	10 pcs.
223-9207.00-00000	100 mm	20 mm	16 mm	steel	loose	10 mm	weld-on	10 pcs.
223-9208.00-00000	120 mm	20 mm	16 mm	steel	loose	10 mm	weld-on	10 pcs.
223-9209.00-00000	135 mm	22.5 mm	18 mm	steel	loose	12 mm	weld-on	10 pcs.
223-9210.00-00000	150 mm	25.5 mm	20 mm	steel	loose	13 mm	weld-on	10 pcs.
223-9211.00-00000	180 mm	25.5 mm	20 mm	steel	loose	13 mm	weld-on	10 pcs.
223-9212.00-00000	200 mm	29 mm	23 mm	steel	loose	16 mm	weld-on	10 pcs.
223-9301.00-00000	40 mm	10 mm	8 mm	brass	loose	5 mm	weld-on	10 pcs.
223-9302.00-00000	50 mm	10 mm	8 mm	brass	loose	5 mm	weld-on	10 pcs.
223-9303.00-00000	60 mm	12 mm	10 mm	brass	loose	6 mm	weld-on	10 pcs.
223-9304.00-00000	70 mm	12 mm	10 mm	brass	loose	6 mm	weld-on	10 pcs.
223-9305.00-00000	80 mm	16 mm	13 mm	brass	loose	8 mm	weld-on	10 pcs.
223-9307.00-00000	100 mm	20 mm	16 mm	brass	loose	10 mm	weld-on	10 pcs.
223-9308.00-00000	120 mm	20 mm	16 mm	brass	loose	10 mm	weld-on	10 pcs.
223-9309.00-00000	135 mm	22.5 mm	18 mm	brass	loose	12 mm	weld-on	10 pcs.
223-9310.00-00000	150 mm	25.5 mm	20 mm	brass	loose	13 mm	weld-on	10 pcs.

Corner Hinge Pr04 180°

[4-320]

Advantages

- For surface mounted doors.
- Hinge visible.
- RH / LH application.
- 180° Opening angle.
- With PA bushings.

Materials

- **Frame- and middle-part:** zinc die, chrome plated or black
- **Pin:** stainless steel
- **Bushings:** PA, natural

Remarks

1. bushings

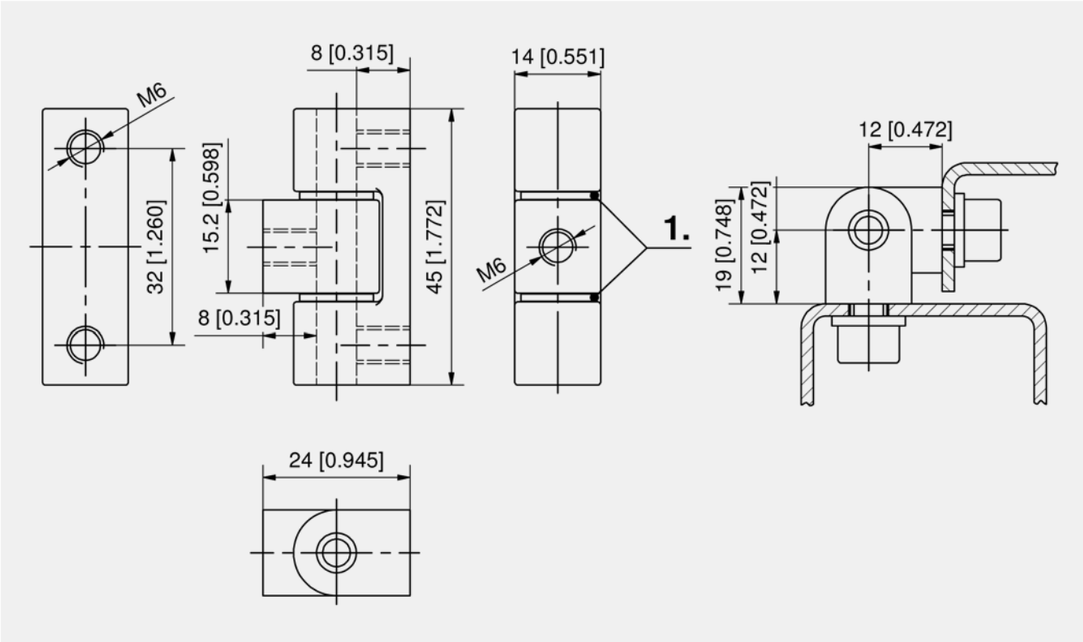

Corner hinge, zinc die

Part Number	Surface	Pin version	Installation type	Delivery Unit
217-9001.00-00000	glossy chrome plated	pressed in	screw-on	10 pcs.
217-9002.00-00000	black	pressed in	screw-on	10 pcs.

+	Accessories
754	6-040 **Serrated Screws**

4-320

◂ all product details on DIRAK.com

Corner Hinge Pr04 180°

[4-323]

Advantages

- For surface mounted doors.
- Hinge visible.
- RH / LH application.
- 180° Opening angle.
- Frame-part screw-on and middle-part weld-on.
- With PA bushings.

Materials

- **Frame-part:** zinc die, blasted chrome plated or black
- **Middle-part:** steel, untreated
- **Pin:** steel, zinc plated
- **Bushing:** PA, natural

Remarks

Delivery unassembled

1. bushing

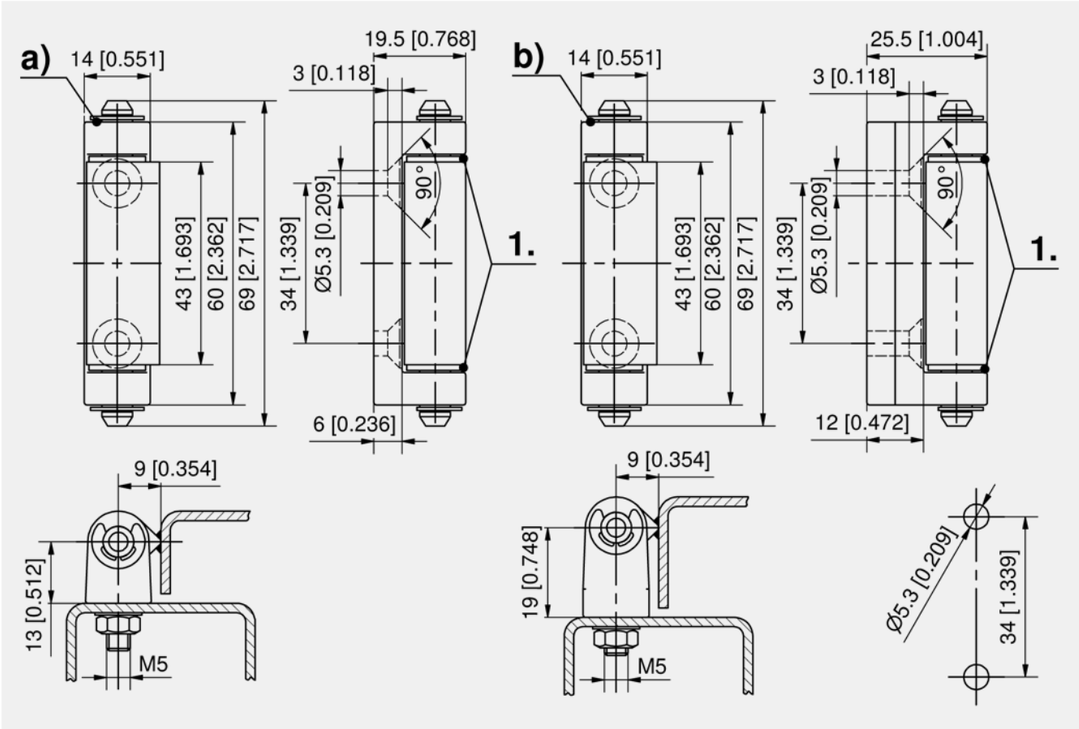

Corner hinge, zinc die

Part Number	Surface frame-part	Frame-part	Pin version	Installation type	Delivery Unit
217-9201.00-00000	blasted chrome plated	normal	with groove incl. locking washer DIN6799	screw- / weld-on	10 pcs.
217-9203.00-00000	blasted chrome plated	raised	with groove incl. locking washer DIN6799	screw- / weld-on	10 pcs.
217-9202.00-00000	black	normal	with groove incl. locking washer DIN6799	screw- / weld-on	10 pcs.
217-9204.00-00000	black	raised	with groove incl. locking washer DIN6799	screw- / weld-on	10 pcs.

all product details ▸ on DIRAK.com

4-323

Corner Hinge Pr04 180°

[4-326]

Advantages

- For surface mounted doors.
- Hinge visible.
- RH / LH application.
- 180° Opening angle.
- Screw-on.
- With PA bushings.
- The 2 upper examples of applications show the asymetric layout of the door-part (2).
- This layout allows for a wide variety of door bendings.
- The knurled pin can be replaced by a pin with 2 c-clips see product system 4-330.

Materials

- **Frame- and middle-part**: zinc die, blasted chrome plated or black
- **Pin:** stainless steel
- **Bushing:** PA, natural

Remarks

Delivery unassembled

1. bushing

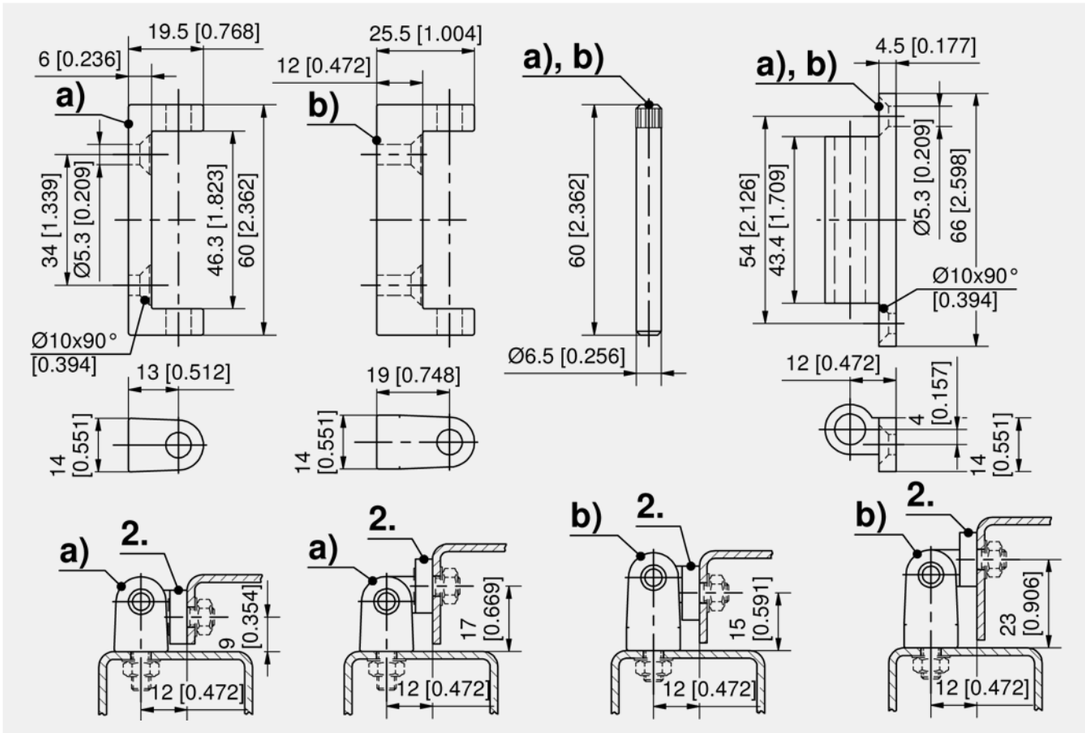

Corner hinge, zinc die

	Part Number	Surface frame-part	Frame-part	Pin version	Installation type	Delivery Unit
a)	217-9301.00-00000	blasted chrome plated	normal	pressed in	screw-on	10 pcs.
b)	217-9303.00-00000	blasted chrome plated	raised	pressed in	screw-on	10 pcs.
a)	217-9302.00-00000	black	normal	pressed in	screw-on	10 pcs.
b)	217-9304.00-00000	black	raised	pressed in	screw-on	10 pcs.

4-326
◂ all product details on DIRAK.com

Corner Hinge Pr04 180°

[4-370]

Advantages

- Hinge to be welded in door slot.
- For surface mounted doors.
- Hinge visible.
- RH / LH application.
- 180° Opening angle.
- Frame-part screw-on.
- Door-part weld-on.

Materials

- **Door-part:** steel, untreated
- **Pin and frame-parts:** steel, zinc plated

Remarks

1. version a) and b) with spot weld stubs 0.8mm high.

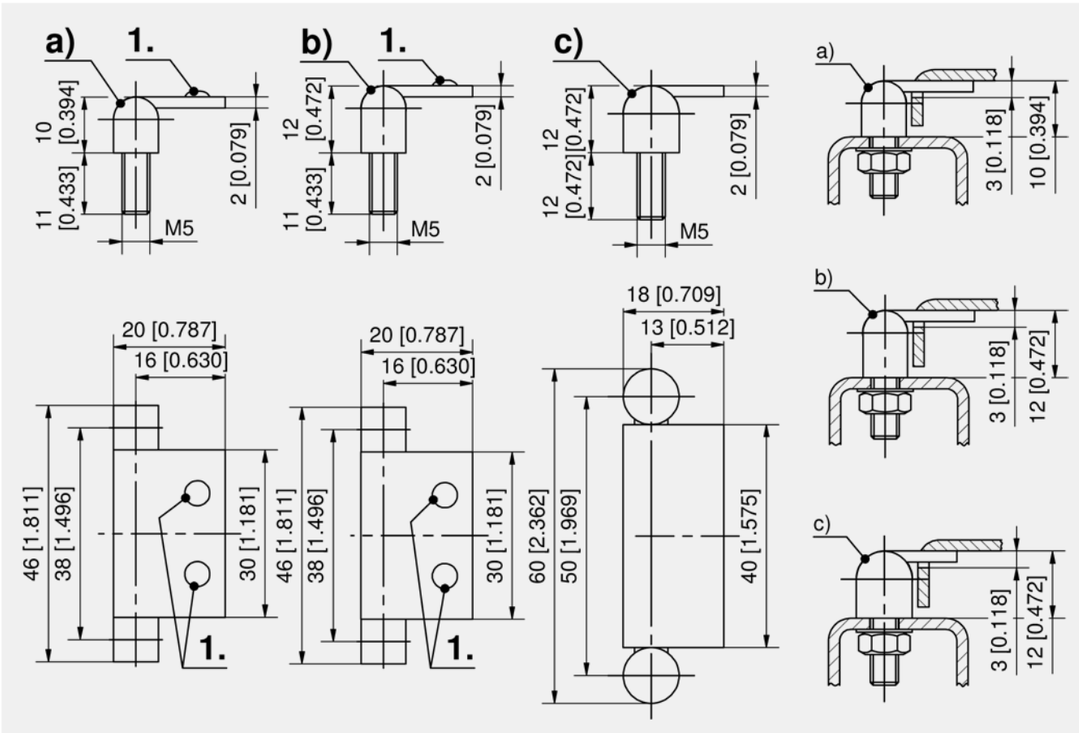

Corner hinge

	Part Number	Height H	Door-part with spot weld stubs	Pin version	Installation type frame-part	Installation type door-part	Delivery Unit
a)	240-9201.00-00000	10 mm	Yes	loose	screw-on	weld-on	10 pcs.
b)	240-9202.00-00000	12 mm	Yes	loose	screw-on	weld-on	10 pcs.
c)	240-9002.00-00000	12 mm		loose	screw-on	weld-on	10 pcs.

all product details ▸ on DIRAK.com
4-370

DST Corner Hinge Pr04 180°

[4-349DST]

Advantages

- Hinge with DIRAK-SNAP-Technology.
- For surface mounted doors.
- Hinge visible.
- 180° Opening angle.
- Lift-off.
- RH / LH application.
- The installation is tool-less by a simple push into the appropriate cutout.
- To guarantee a correct positional installation, the cutouts can have indentations.

Materials

- **Hinge-parts:** zinc die, matte chrome plated
- **Other surfaces on request**
- **Pin:** steel, zinc plated
- **Snap wedges:** sintered steel

Remarks

1. alternative cutout
2. indentation for correct positional installation

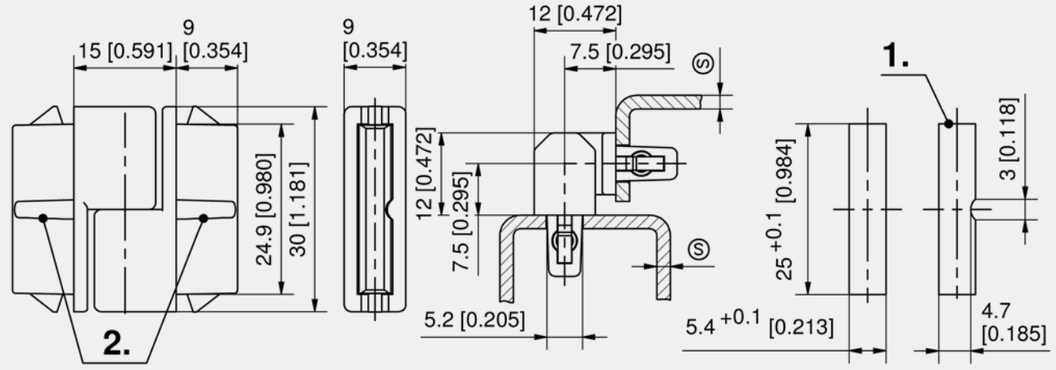

Corner hinge, snap-in

Part Number	Clamping range (S)	Pin version	Installation type	Delivery Unit
417-9201.00-00609	0.6 - 0.9 mm	pressed in	tool-less	10 pcs.
417-9201.00-00811	0.8 - 1.1 mm	pressed in	tool-less	10 pcs.
417-9201.00-01215	1.2 - 1.5 mm	pressed in	tool-less	10 pcs.
417-9201.00-01821	1.8 - 2.1 mm	pressed in	tool-less	10 pcs.
417-9201.00-02225	2.2 - 2.5 mm	pressed in	tool-less	10 pcs.

+	Accessories
764	292-0306.80-02530 **Tool for uninstallation**

4-349DST
all product details on DIRAK.com

Hinge Pr05 180°

[4-145]

Advantages

- 180° Polyamide hinge with self-locking POM pin used to control cabinet doors or machine flaps.
- For surface mounted doors for single cabinets.
- Hinge partly visible.
- Door bending 16mm.
- RH / LH application.
- 180° Opening angle.

Materials

- **Frame- and door-part**: PA, black
- **Pin:** POM natural

Remarks

1. mounting with countersunk screw M5 or blind rivet Ø5

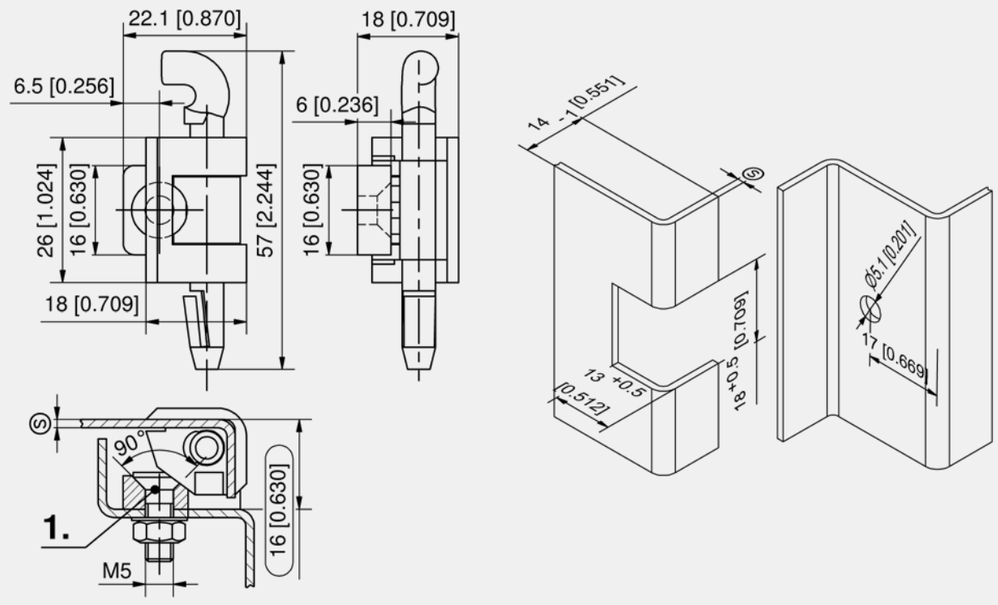

Hinge

Part Number	Door-thickness (S)	Pin version	Installation type	Delivery Unit
212-9103.00-00000	1 - 1.25 mm	self-locking	screw-on	50 pcs.
212-9101.00-00000	1.5 - 2 mm	self-locking	screw-on	50 pcs.

all product details on DIRAK.com
4-145

Hinge Pr05 180°

Advantages

- For surface mounted doors for single cabinets.
- Hinge partly visible.
- Door bending 20mm.
- RH / LH application.
- 180° Opening angle.
- The door-part has 2 stubs, keeping it in position during mounting of the pin.

Materials

- **Frame- and door-part:** zinc die, glossy chrome plated or black
- **Pins:** steel, zinc plated, stainless steel or POM natural

Remarks

This hinge is fully interchangeable with the hinge shown on product system 4-160.

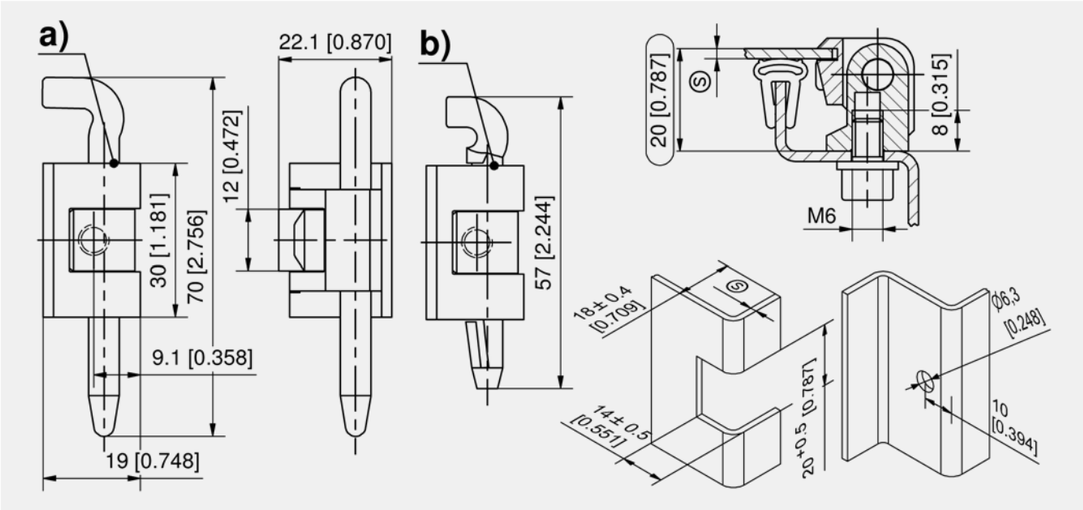

Hinge, zinc die

	Part Number	Surface	Door-thickness (S)	Material pin	Pin length L	Pin version	Installation type	Delivery Unit
a)	212-9001.00-00000	glossy chrome plated	1.5 - 2.0 mm	steel, zinc plated	70 mm	loose	screw-on	10 pcs.
a)	212-9002.00-00000	glossy chrome plated	1.5 - 2.0 mm	stainless steel	70 mm	loose	screw-on	10 pcs.
b)	212-9003.00-00000	glossy chrome plated	1.5 - 2.0 mm	POM	57 mm	self-locking	screw-on	10 pcs.
a)	212-9501.00-00000	glossy chrome plated	2.5 - 3.2 mm	steel, zinc plated	70 mm	loose	screw-on	10 pcs.
a)	212-9502.00-00000	glossy chrome plated	2.5 - 3.2 mm	stainless steel	70 mm	loose	screw-on	10 pcs.
b)	212-9503.00-00000	glossy chrome plated	2.5 - 3.2 mm	POM	57 mm	self-locking	screw-on	10 pcs.
a)	212-9004.00-00000	black	1.5 - 2.0 mm	steel, zinc plated	70 mm	loose	screw-on	10 pcs.
a)	212-9005.00-00000	black	1.5 - 2.0 mm	stainless steel	70 mm	loose	screw-on	10 pcs.
b)	212-9006.00-00000	black	1.5 - 2.0 mm	POM	57 mm	self-locking	screw-on	10 pcs.
a)	212-9504.00-00000	black	2.5 - 3.2 mm	steel, zinc plated	70 mm	loose	screw-on	10 pcs.
a)	212-9505.00-00000	black	2.5 - 3.2 mm	stainless steel	70 mm	loose	screw-on	10 pcs.
b)	212-9506.00-00000	black	2.5 - 3.2 mm	POM	57 mm	self-locking	screw-on	10 pcs.

	Accessories
754	6-040 **Serrated Screws**

4-150
all product details on DIRAK.com

Hinge Pr05 180° Stainless Steel

Advantages

- For surface mounted doors for single cabinets.
- Hinge partly visible.
- Door bending 16mm.
- RH / LH application.
- 180° Opening angle.
- The POM pin is self-locking.

Materials

- **Frame- and door-part:** AISI 316
- **Pin:** POM, natural or stainless steel

Remarks

1. fastening with countersunk screw M5 or blind rivet Ø5

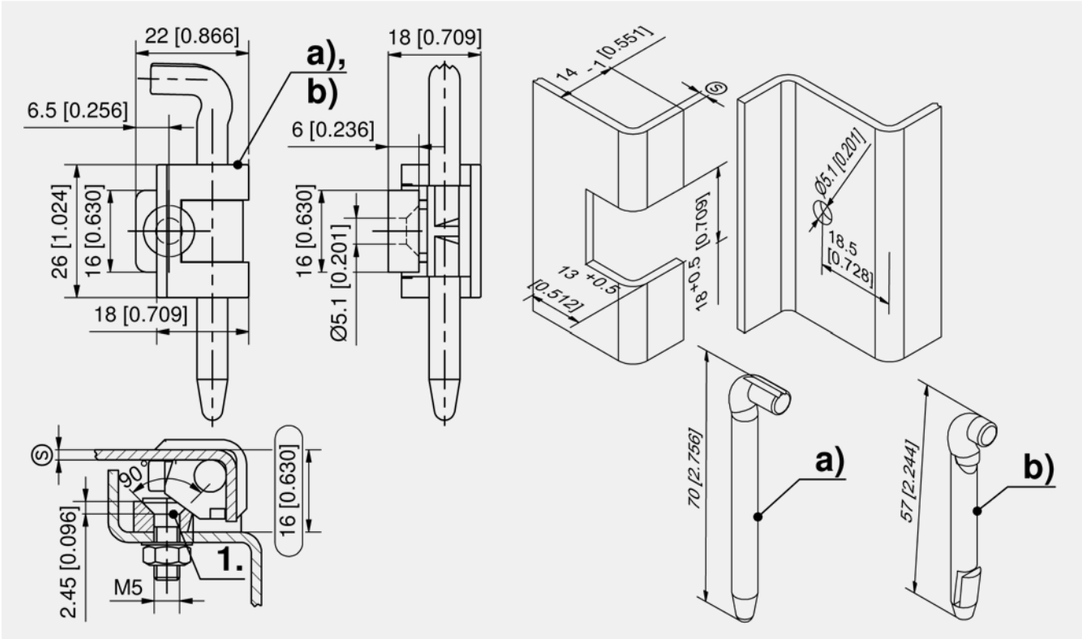

Hinge

	Part Number	Door-thickness (S)	Material pin	Pin version	Pin length L	Installation type	Delivery Unit
a)	212-9704.00-00000	1.5 mm	stainless steel	loose	70 mm	screw-on	10 pcs.
a)	212-9713.00-00000	2 mm	stainless steel	loose	70 mm	screw-on	10 pcs.
b)	212-9703.00-00000	2 mm	POM	self-locking	57 mm	screw-on	10 pcs.

all product details on DIRAK.com
7-133

Hinge Pr05 180° Stainless Steel

[7-134]

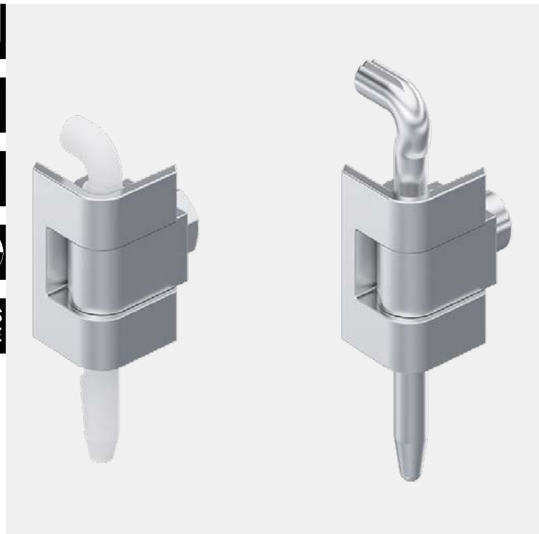

Advantages

- For surface mounted doors for single cabinets.
- Hinge partly visible.
- Door bending 20mm.
- RH / LH application.
- 180° Opening angle.
- The POM pin is self-locking.

Materials

- **Hinge-parts:** AISI 316
- **Pin:** POM, natural or stainless steel

Remarks

(S) Door-thickness 1.5 - 2mm

Installation accessories:

1. screws M6x12 and serrated washer
2. stud M6x16, Nut M6 and serrated washer

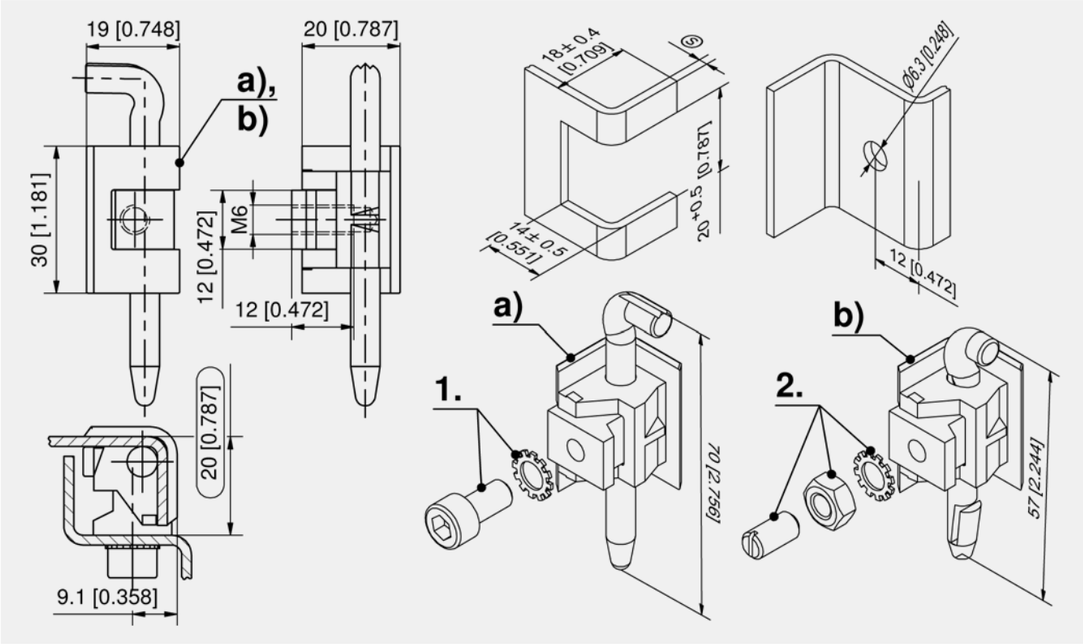

Hinge

	Part Number	Material pin	Pin length L	Pin version	Installation accessories	Installation type	Delivery Unit
a)	212-9201.00-00000	stainless steel	70 mm	loose	Yes	screw-on	10 pcs.
a)	212-9203.00-00000	stainless steel	70 mm	loose	No	screw-on	10 pcs.
b)	212-9202.00-00000	POM	57 mm	self-locking	Yes	screw-on	10 pcs.
b)	212-9204.00-00000	POM	57 mm	self-locking	No	screw-on	10 pcs.

7-134

◂ all product details on DIRAK.com

Hinge Pr05 180°

[4-152]

Advantages

- For surface mounted door for single cabinets.
- Hinge partly visible.
- Door bending 20mm.
- RH / LH application.
- 180° Opening angle.
- Frame-part in the zinc die version with M6 threaded stubs for fastening from inside.
- Frame-part made of steel for heavy applications!

Materials

- **Frame-part:** zinc die, glossy chrome plated, black or steel, black
- **Fastening washer:** steel, zinc plated
- **Door-part:** zinc die, glossy chrome plated or black
- **Pin:** steel, stainless steel or POM

Remarks

(s) Door-thickness 1.5 - 2 mm

1. installation instruction for fastening washer
2. fastening washer

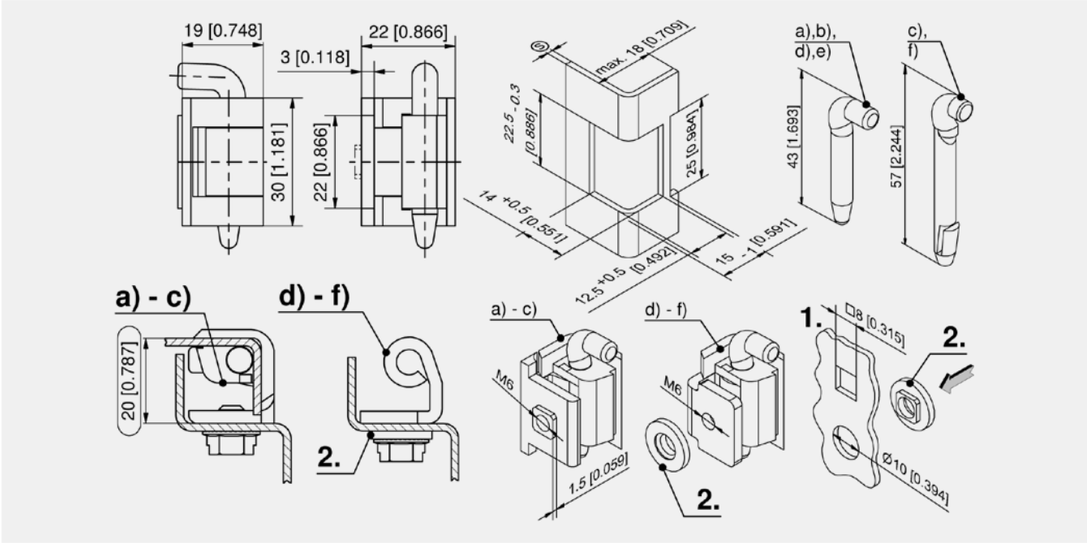

Hinge, zinc die

	Part Number	Surface	Version	Material pin	Pin length L	Pin version	Installation type	Delivery Unit
a)	212-9056.00-00000	glossy chrome plated	with M6 threaded stubs	steel, zinc plated	43 mm	loose	screw-on	10 pcs.
b)	212-9057.00-00000	glossy chrome plated	with M6 threaded stubs	stainless steel	43 mm	loose	screw-on	10 pcs.
c)	212-9058.00-00000	glossy chrome plated	with M6 threaded stubs	POM	57 mm	self-locking	screw-on	10 pcs.
a)	212-9059.00-00000	black	with M6 threaded stubs	steel, zinc plated	43 mm	loose	screw-on	10 pcs.
b)	212-9060.00-00000	black	with M6 threaded stubs	stainless steel	43 mm	loose	screw-on	10 pcs.
c)	212-9061.00-00000	black	with M6 threaded stubs	POM	57 mm	self-locking	screw-on	10 pcs.

Hinge, frame-part steel, door-part zinc die

	Part Number	Surface	Version	Material pin	Pin length L	Pin version	Installation type	Delivery Unit
d)	212-9062.00-00000	black	with fastening washer	steel, zinc plated	43 mm	loose	screw-on	10 pcs.
e)	212-9063.00-00000	black	with fastening washer	stainless steel	43 mm	loose	screw-on	10 pcs.
f)	212-9064.00-00000	black	with fastening washer	POM	57 mm	self-locking	screw-on	10 pcs.

+	Accessories
754	6-040 **Serrated Screws**

all product details ▸ on DIRAK.com

4-152

Hinge Pr05 180° Stainless Steel

[7-132]

Advantages

- For surface mounted doors for single cabinets.
- Hinge partly visible.
- Door bending 20mm (closed cutout provides a stronger bending).
- RH / LH application.
- 180° Opening angle.
- Frame-part with M6 threaded stub for installation from inside.
- The POM pin is self-locking.

Materials

- **Door- and frame-part:** AISI 316
- **Pin:** stainless steel or POM

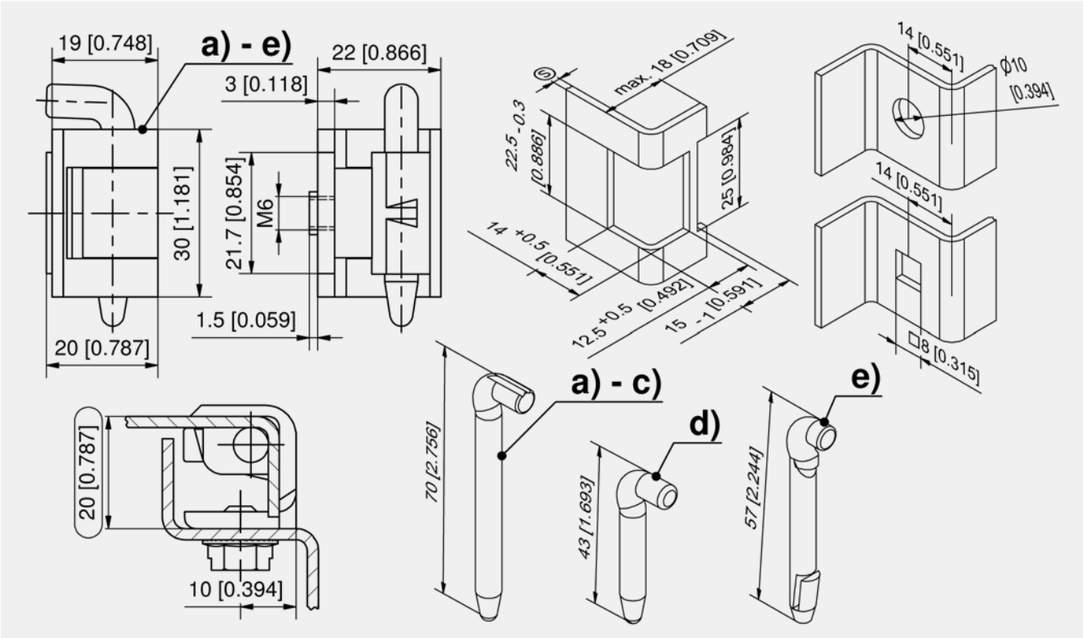

Hinge

	Part Number	Door-thickness (S)	Material pin	Pin length L	Pin version	Installation type	Delivery Unit
a)	212-9707.00-00000	1.5 mm	AISI 301	70 mm	loose	screw-on	10 pcs.
b)	212-9716.00-00000	1.5 mm	AISI 316	70 mm	loose	screw-on	10 pcs.
c)	212-9714.00-00000	2 mm	AISI 316	70 mm	loose	screw-on	10 pcs.
d)	212-9705.00-00000	2 mm	AISI 304	43 mm	loose	screw-on	10 pcs.
e)	212-9706.00-00000	2 mm	POM	57 mm	self-locking	screw-on	10 pcs.

Accessories
754 202-0606.04-00000 **Serrated screw**

7-132
all product details on DIRAK.com

DST Hinge Pr05 180°

[4-152DST]

Advantages

- For surface mounted doors for single cabinets.
- Hinge partly visible.
- Door bending 20mm.
- RH / LH application.
- 180° Opening angle.
- Lift-off.
- Installation of the frame-part by simple tool-less push into the cutout.
- IP65 according to DIN EN 60529 (optional).

Materials

- **Frame- and door-part:** zinc die, matte black
- **Pin:** steel, zinc plated, AISI 304 or POM
- **Snap wedges:** sintered steel, zinc plated

Remarks

For light applications only!

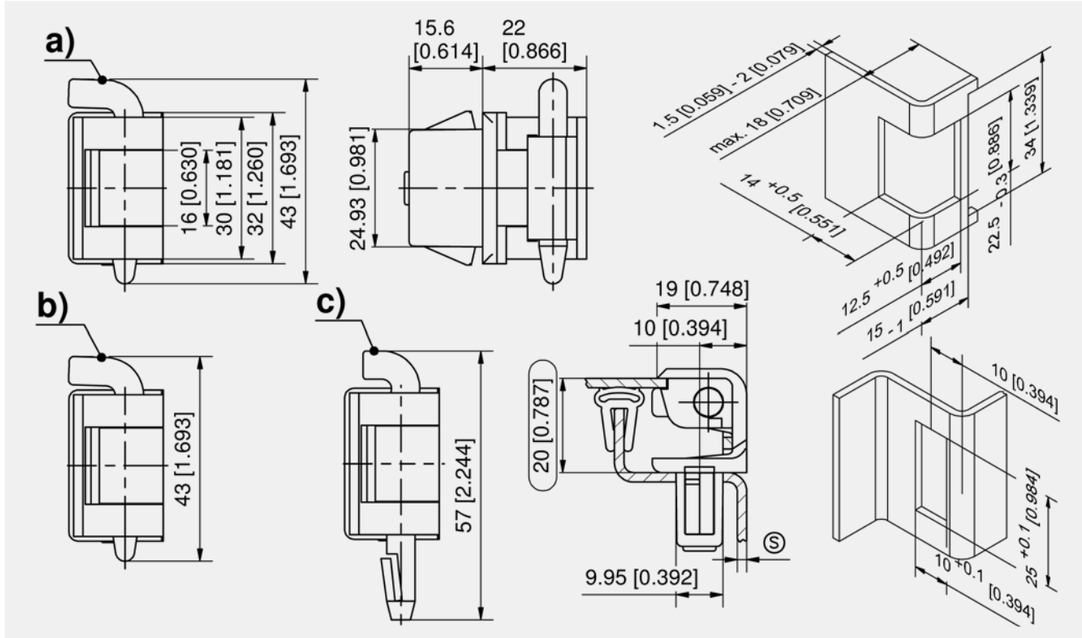

Hinge

	Part Number	Clamping range (S)	Material pin	Pin length L	Pin version	Installation type	Delivery Unit
a)	412-9059.00-01217	1.2 - 1.7 mm	steel, zinc plated	43 mm	loose	tool-less	10 pcs.
a)	412-9059.00-01722	1.7 - 2.2 mm	steel, zinc plated	43 mm	loose	tool-less	10 pcs.
b)	412-9060.00-01217	1.2 - 1.7 mm	AISI 304	43 mm	loose	tool-less	10 pcs.
b)	412-9060.00-01722	1.7 - 2.2 mm	AISI 304	43 mm	loose	tool-less	10 pcs.
c)	412-9061.00-01217	1.2 - 1.7 mm	POM	57 mm	self-locking	tool-less	10 pcs.
c)	412-9061.00-01722	1.7 - 2.2 mm	POM	57 mm	self-locking	tool-less	10 pcs.

Accessories
762 292-0403.06-07035 **Cutout-cover**
762 292-0403.06-09005 **Cutout-cover**
764 292-0306.80-02530 **Tool for uninstallation**

Function extension
839-3770.40-02120 **O-ring 21 x 2.0mm**

all product details on DIRAK.com
4-152DST

DST Hinge Pr05 180° Stainless steel

[7-152DST]

Advantages

- Hinge with DIRAK-SNAP-Technology.
- For surface mounted doors for single cabinets.
- Hinge partly visible.
- Door bending 20mm.
- RH / LH application.
- 180° Opening angle.
- Installation of the frame-part by simple tool-less push into the cutout.
- IP65 according to DIN EN 60529 (optional).

Materials

- **Frame- and door-part:** AISI 316
- **Pin:** AISI 316 or POM
- **Snap wedges:** stainless steel

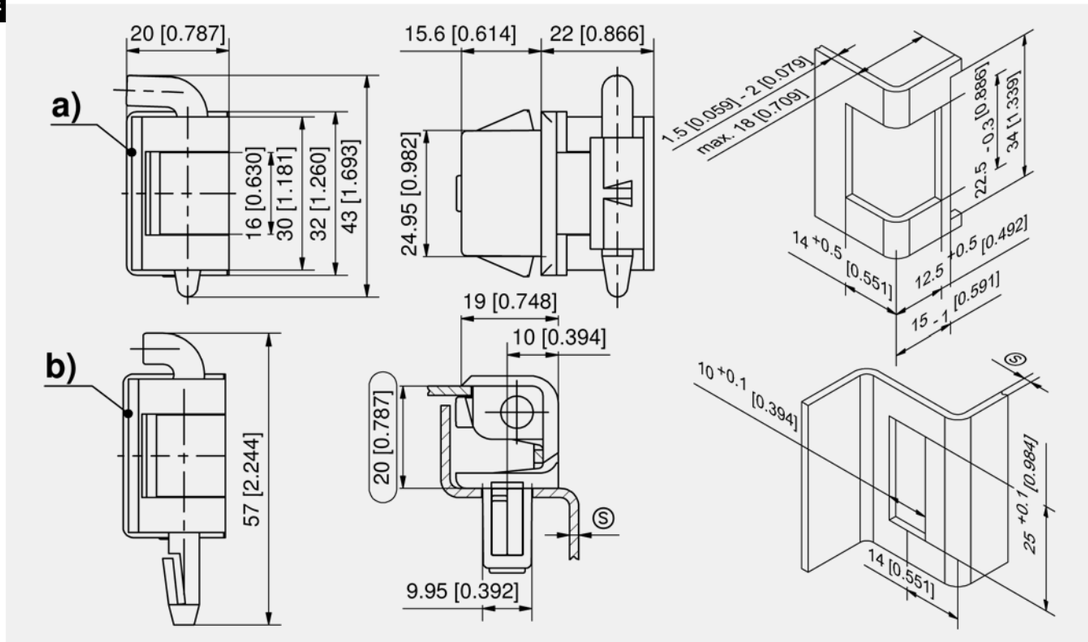

Hinge

	Part Number	Clamping range (S)	Material pin	Pin length L	Pin version	Installation type	Delivery Unit
a)	412-9063.00-01217	1.2 - 1.7 mm	AISI 316	43 mm	loose	tool-less	10 pcs.
b)	412-9064.00-01217	1.2 - 1.7 mm	POM	57 mm	self-locking	tool-less	10 pcs.
a)	412-9063.00-01722	1.7 - 2.2 mm	AISI 316	43 mm	loose	tool-less	10 pcs.
b)	412-9064.00-01722	1.7 - 2.2 mm	POM	57 mm	self-locking	tool-less	10 pcs.

	Accessories
764	292-0306.80-02530 **Tool for uninstallation**
762	292-0403.06-07035 **Cutout-cover**
762	292-0403.06-09005 **Cutout-cover**

	Function extension
	839-3770.40-02120 **O-ring 21 x 2.0mm**

7-152DST

◂ all product details on DIRAK.com

Hinge Pr05 180°

[4-161]

Advantages

- For surface mounted doors for adjacent cabinets.
- RH / LH application.
- Door-bending 20mm.
- 180° opening angle.

Materials

- **Frame- and door-part:** zinc die, glossy chrome plated or black
- **Washer:** brass, nickel plated
- **Pin:** steel, zinc plated or POM, natural

Remarks

1. pin steel, zinc plated
2. pin POM

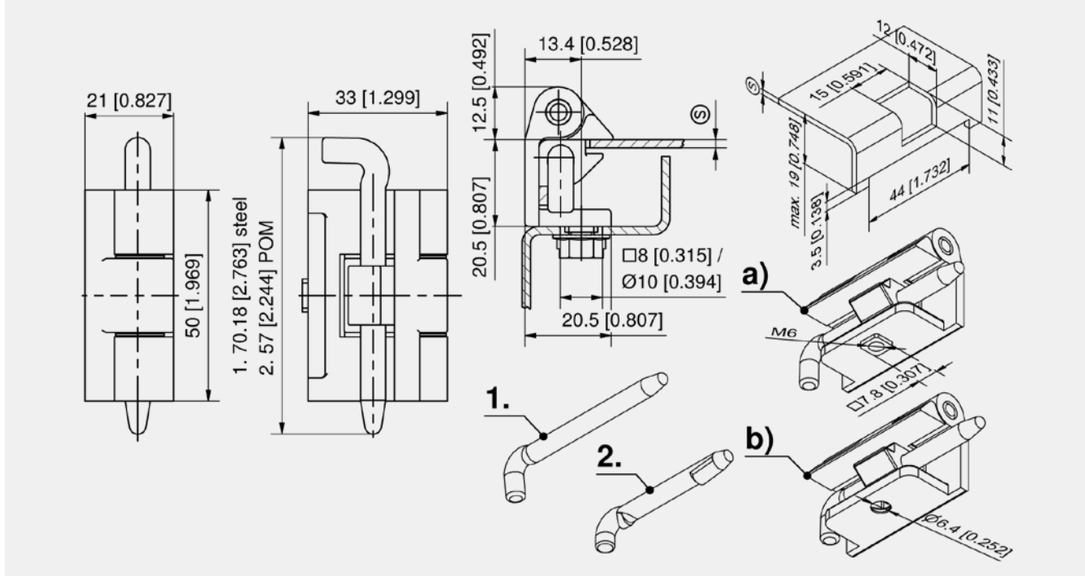

Hinge, zinc die

	Part Number	Door-thickness (S)	Surface	Version	Material pin	Pin version	Installation type	Delivery Unit
a)	212-9025.00-00000	1.5 - 2.0 mm	glossy chrome plated	with M6 threaded stubs	steel	loose	screw-on	10 pcs.
b)	212-9026.00-00000	1.5 - 2.0 mm	glossy chrome plated	with countersunk holes for 6mm	steel	loose	screw-on	10 pcs.
a)	212-9033.00-00000	1.5 - 2.0 mm	glossy chrome plated	with M6 threaded stubs	POM	self-locking	screw-on	10 pcs.
b)	212-9034.00-00000	1.5 - 2.0 mm	glossy chrome plated	with countersunk holes for 6mm	POM	self-locking	screw-on	10 pcs.
a)	212-9027.00-00000	1.5 - 2.0 mm	black	with M6 threaded stubs	steel	loose	screw-on	10 pcs.
b)	212-9028.00-00000	1.5 - 2.0 mm	black	with countersunk holes for 6mm	steel	loose	screw-on	10 pcs.
a)	212-9035.00-00000	1.5 - 2.0 mm	black	with M6 threaded stubs	POM	self-locking	screw-on	10 pcs.
b)	212-9036.00-00000	1.5 - 2.0 mm	black	with countersunk holes for 6mm	POM	self-locking	screw-on	10 pcs.
a)	212-9527.00-00000	2.5 - 3.2 mm	black	with M6 threaded stubs	steel	loose	screw-on	10 pcs.
b)	212-9528.00-00000	2.5 - 3.2 mm	black	with countersunk holes for 6mm	steel	loose	screw-on	10 pcs.
a)	212-9535.00-00000	2.5 - 3.2 mm	black	with M6 threaded stubs	POM	self-locking	screw-on	10 pcs.
b)	212-9536.00-00000	2.5 - 3.2 mm	black	with countersunk holes for 6mm	POM	self-locking	screw-on	10 pcs.

	Accessories
754	6-040 **Serrated Screws**

all product details ▸ on DIRAK.com

4-161

DST Hinge Pr05 180°

[4-150DST]

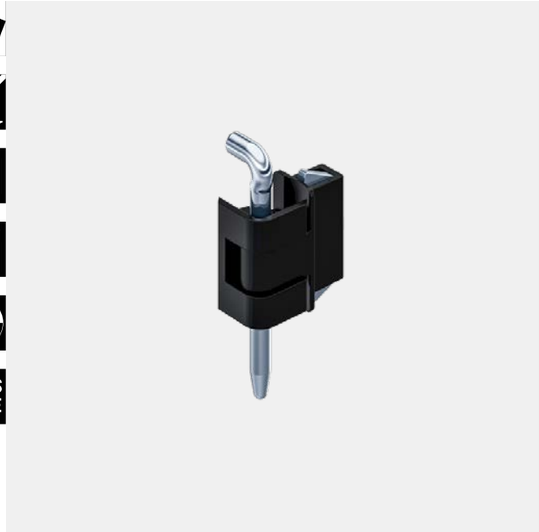

Advantages

- For surface mounted doors for single cabinets.
- Hinge partly visible.
- Door bending 20mm.
- RH / LH application.
- 180° Opening angle.
- The door-part has 2 stubs, keeping it in position during mounting of the pin.
- Installation tool-less by simple push into the cutout.

Materials

- **Frame- and door-part**: zinc die, matte black
- **Snap wedges:** sintered steel
- **Pin:** steel, zinc plated

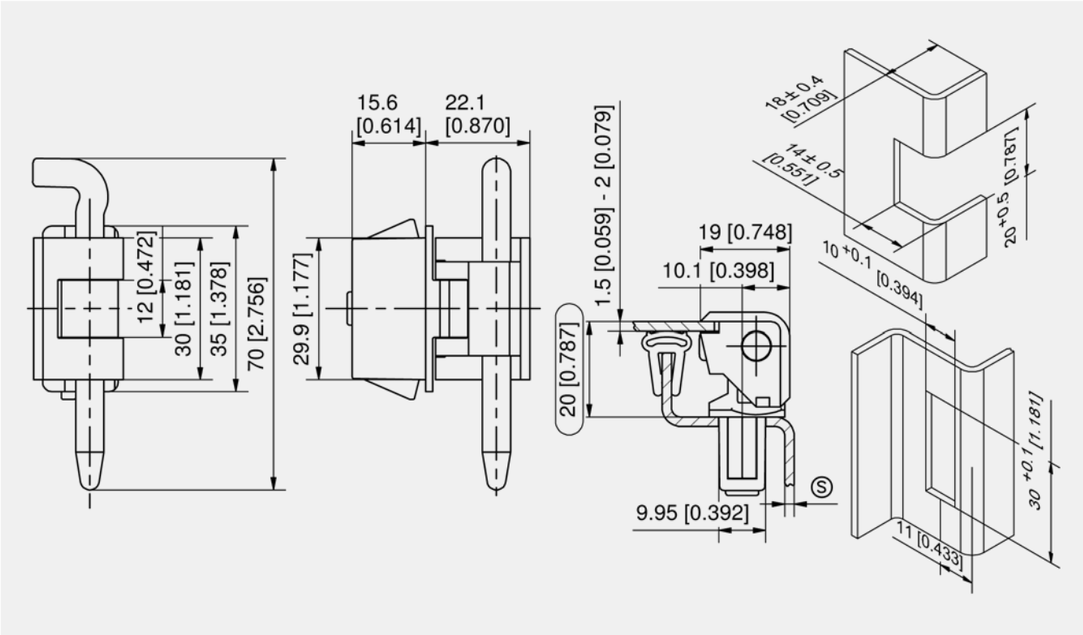

Hinge, clip-in

Part Number	Clamping range (S)	Pin version	Installation type	Delivery Unit
412-9101.00-00015	1.2 - 1.7 mm	loose	tool-less	10 pcs.
412-9101.00-00020	1.7 - 2.2 mm	loose	tool-less	10 pcs.
412-9101.00-00025	2.2 - 2.7 mm	loose	tool-less	10 pcs.
412-9101.00-00030	2.7 - 3.2 mm	loose	tool-less	10 pcs.

	Accessories
764	292-0306.80-02530 **Tool for uninstallation**
762	292-0401.00-03010 **Cutout-cover**
763	292-0702.15-01030 **Reinforcement plate for cutout**

4-150DST

all product details on DIRAK.com

Hinge Pr05 180°

[4-160]

Advantages

- For surface mounted doors for adjacent cabinets.
- Hinge partly visible.
- Door bending 20mm.
- RH / LH application.
- 180° Opening angle.
- The POM pin is self-locking.

Materials

- **Frame- and door-part:** zinc die, glossy chrome plated or black
- **Pivot pin:** stainless steel
- **Pin:** steel, zinc plated, stainless steel or POM, natural

Remarks

The shifted pivot point gives a larger radius.

This hinge is completely interchangeable with the hinge on product system 4-150.

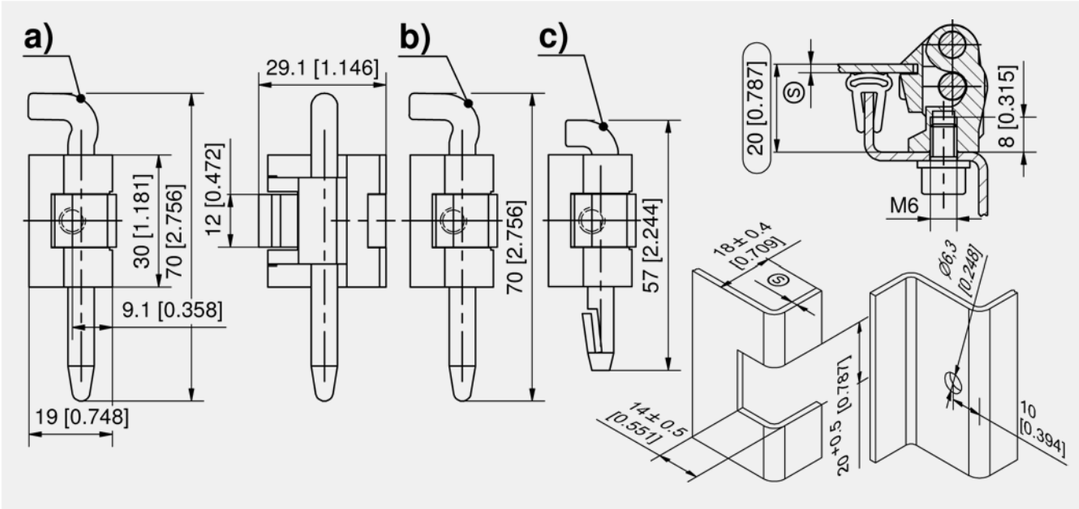

Hinge, zinc die

	Part Number	Door-thickness (S)	Surface	Material pin	Pin version	Installation type	Delivery Unit
a)	212-9007.00-00000	1.5 - 2.0 mm	glossy chrome plated	steel, zinc plated	loose	screw-on	10 pcs.
b)	212-9008.00-00000	1.5 - 2.0 mm	glossy chrome plated	stainless steel	loose	screw-on	10 pcs.
c)	212-9009.00-00000	1.5 - 2.0 mm	glossy chrome plated	POM	self-locking	screw-on	10 pcs.
a)	212-9507.00-00000	2.5 - 3.2 mm	glossy chrome plated	steel, zinc plated	loose	screw-on	10 pcs.
b)	212-9508.00-00000	2.5 - 3.2 mm	glossy chrome plated	stainless steel	loose	screw-on	10 pcs.
c)	212-9509.00-00000	2.5 - 3.2 mm	glossy chrome plated	POM	self-locking	screw-on	10 pcs.
a)	212-9010.00-00000	1.5 - 2.0 mm	black	steel, zinc plated	loose	screw-on	10 pcs.
b)	212-9011.00-00000	1.5 - 2.0 mm	black	stainless steel	loose	screw-on	10 pcs.
c)	212-9012.00-00000	1.5 - 2.0 mm	black	POM	self-locking	screw-on	10 pcs.
a)	212-9510.00-00000	2.5 - 3.2 mm	black	steel, zinc plated	loose	screw-on	10 pcs.
b)	212-9511.00-00000	2.5 - 3.2 mm	black	stainless steel	loose	screw-on	10 pcs.
c)	212-9512.00-00000	2.5 - 3.2 mm	black	POM	self-locking	screw-on	10 pcs.

	Accessories
754	6-040 **Serrated Screws**

all product details on DIRAK.com

4-160

Hinge Pr05 180° Stainless Steel

[7-135]

Advantages

- For surface mounted doors for adjacent cabinets.
- Hinge partly visible.
- Door bending 20mm.
- RH / LH application.
- 180° Opening angle.
- The POM pin is self-locking.

Materials

- **Hinge-parts:** AISI 316
- **Pin:** POM, natural or stainless steel

Remarks

(S) Door-thickness 1.5-2mm

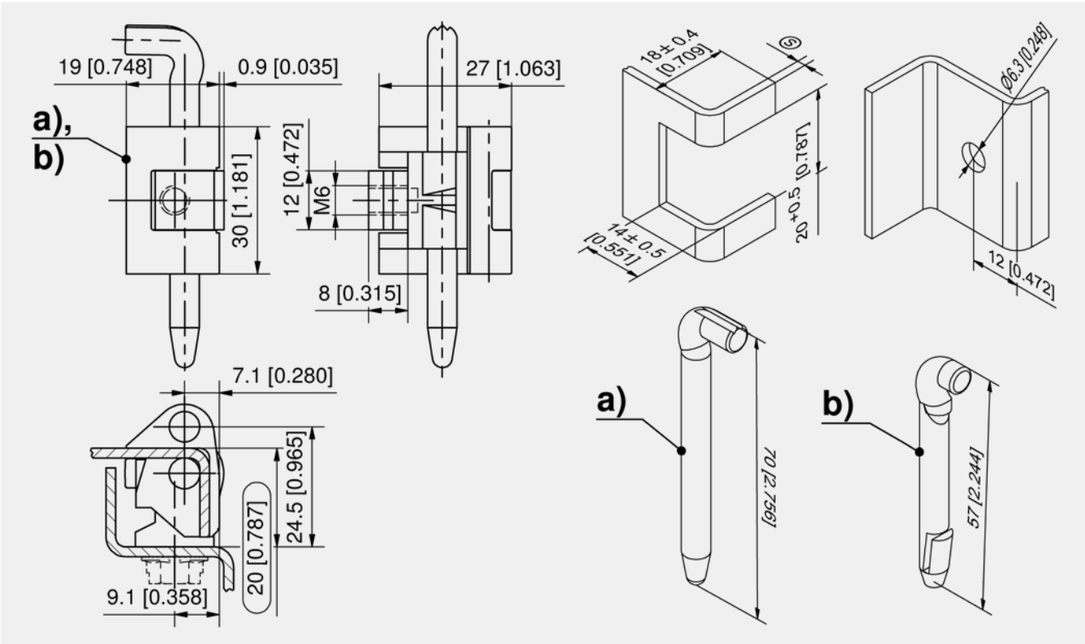

Hinge

	Part Number	Material pin	Pin length L	Pin version	Installation type	Delivery Unit
a)	212-9701.00-00000	stainless steel	70 mm	loose	screw-on	10 pcs.
b)	212-9702.00-00000	POM	57 mm	self-locking	screw-on	10 pcs.

	Accessories
754	6-040 **Serrated Screws**

7-135
◂ all product details on DIRAK.com

Hinge Pr05 180° Stainless Steel

[7-131]

Advantages

- For surface mounted doors.
- Hinge partly visible.
- Lift-off.
- Door bending 20mm.
- RH and LH version.
- 180° Opening angle for adjacent cabinets.
- 270° Opening angle for single cabinets.

Materials

- **Frame- and door-part:** AISI 304
- **Pin:** AISI 303
- **Spacer:** POM

Remarks

Fastening with screws M5

1. door notch
2. spacer

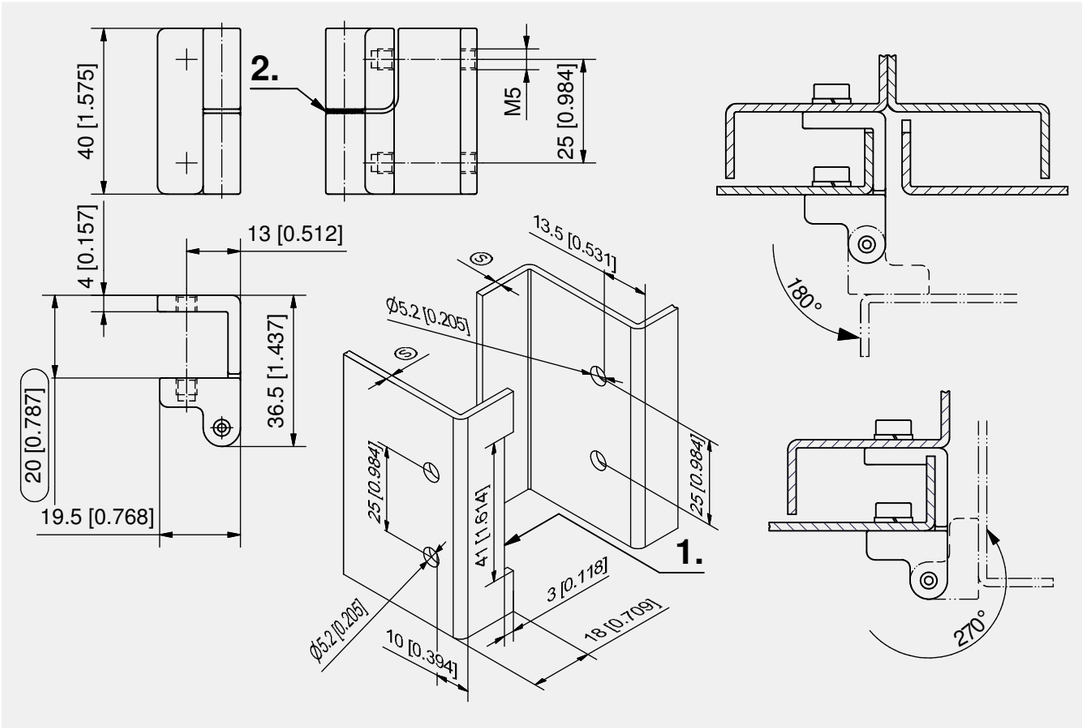

Hinge

Part Number	Version	Pin version	Installation type	Delivery Unit
212-9093.00-00000	RH version	pressed in	screw-on	10 pcs.
212-9094.00-00000	LH version	pressed in	screw-on	10 pcs.

all product details ▸ on DIRAK.com
7-131

Hinge Pr05 180°

[4-170]

Advantages

- For surface mounted doors for single cabinets.
- Hinge partly visible.
- Door-bending 25 or 26mm.
- RH / LH application.
- 180° Opening angle.
- With M6 threaded stubs for fastening from inside or Ø6.4mm countersunk holes for fastening from outside.

Materials

- **Frame- and door-part:** zinc die, glossy chrome plated or black
- **Pin:** steel, zinc plated or stainless steel

Remarks

Version with pin made of stainless steel or POM on request.

This hinge is fully interchangeable with the hinge shown on product system 4-180.

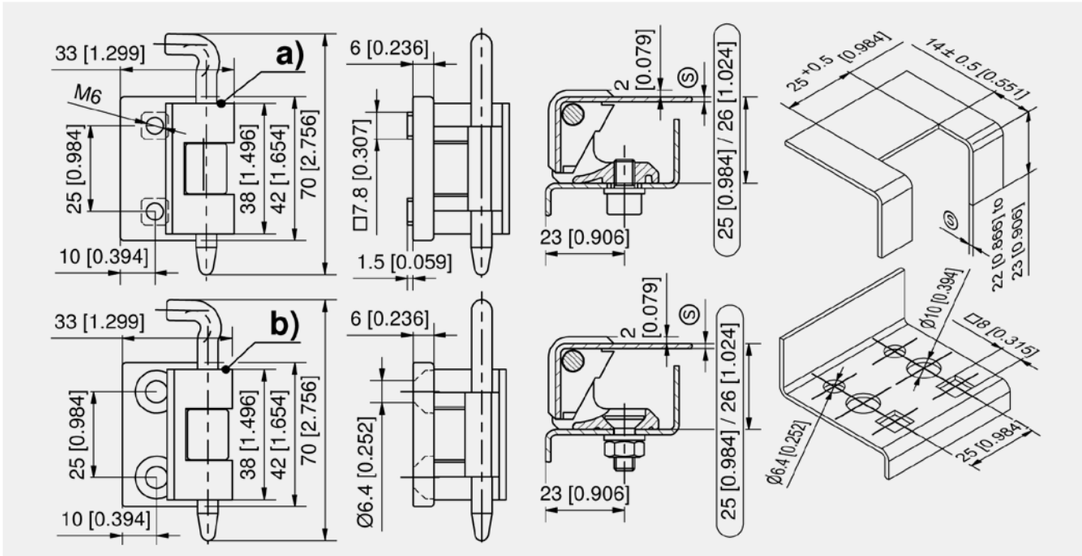

Hinge

	Part Number	Door-thickness (S)	Surface	Bending	Material pin	Frame-part	Pin version	Installation type	Delivery Unit
a)	212-9013.00-00000	1.5 - 2.0 mm	black	25 mm	steel	with M6 threaded stubs	loose	screw-on	10 pcs.
b)	212-9014.00-00000	1.5 - 2.0 mm	black	25 mm	steel	with countersunk holes Ø6.4mm for M6	loose	screw-on	10 pcs.
b)	212-9065.00-00000	1.5 - 2.0 mm	black	25 mm	stainless steel	with countersunk holes Ø6.4mm for M6	loose	screw-on	10 pcs.
a)	212-9019.00-00000	1.5 - 2.0 mm	glossy chrome plated	25 mm	steel	with M6 threaded stubs	loose	screw-on	10 pcs.
b)	212-9020.00-00000	1.5 - 2.0 mm	glossy chrome plated	25 mm	steel	with countersunk holes Ø6.4mm for M6	loose	screw-on	10 pcs.
a)	212-9513.00-00000	2.5 - 3.2 mm	black	26 mm	steel	with M6 threaded stubs	loose	screw-on	10 pcs.
b)	212-9514.00-00000	2.5 - 3.2 mm	black	26 mm	steel	with countersunk holes Ø6.4mm for M6	loose	screw-on	10 pcs.
a)	212-9519.00-00000	2.5 - 3.2 mm	glossy chrome plated	26 mm	steel	with M6 threaded stubs	loose	screw-on	10 pcs.
b)	212-9520.00-00000	2.5 - 3.2 mm	glossy chrome plated	26 mm	steel	with countersunk holes Ø6.4mm for M6	loose	screw-on	10 pcs.

	Accessories
754	6-040 **Serrated Screws**

4-170

◂ all product details on DIRAK.com

Hinge Pr05 180°

[4-180]

Advantages

- For surface mounted doors for adjacent cabinets.
- Hinge partly visible.
- With 90° lift-off.
- Door-bending 25mm.
- RH and LH version.
- 180° Opening angle.
- With M6 threaded stubs for fastening from inside or Ø6.4mm countersunk holes for fastening from outside.
- The hinge is designed for an easy fastening to the door.

Materials

- **Frame- and door-part:** zinc die, glossy chrome plated or black
- **Pivot pin:** stainless steel
- **Pin:** steel, zinc plated

Remarks

(S) Door-thickness 1.5 - 2.5mm

1. alternative cutouts

Hinges for door-thickness > 2mm see product system 4-183.

This hinge is fully interchangeable with the hinge shown on product system 4-170.

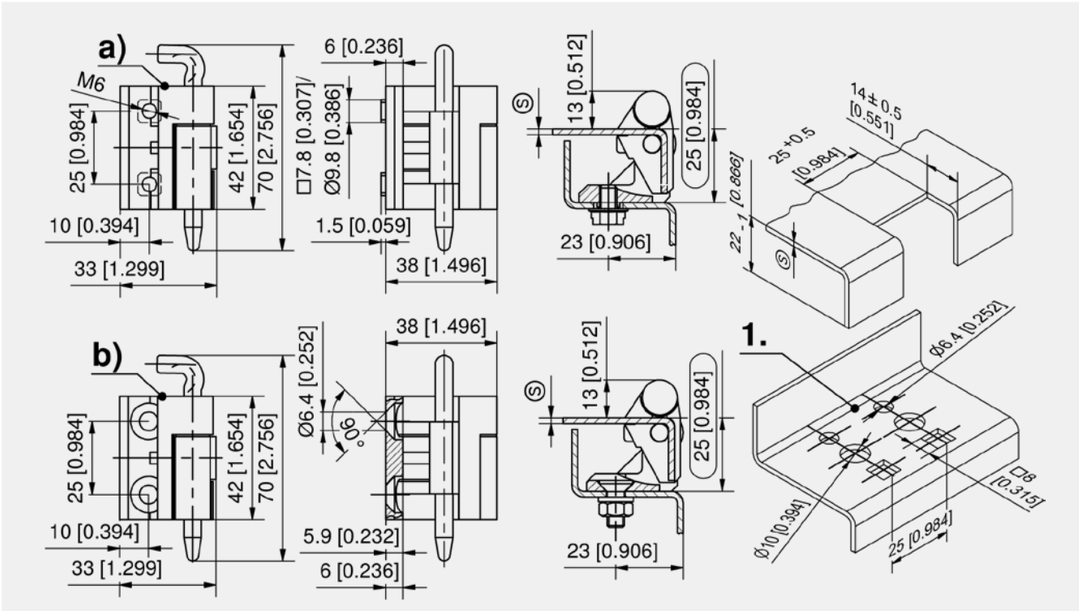

Hinge, zinc die

	Part Number	Surface	Version	Frame-part	cutout in frame	Pin version	Installation type	Delivery Unit
a)	212-9015.00-00000	black	RH version	with M6 threaded stubs	□8 or Ø10	loose	screw-on	10 pcs.
b)	212-9016.00-00000	black	RH version	with countersunk holes Ø6.4mm for M6	Ø6.4	loose	screw-on	10 pcs.
a)	212-9021.00-00000	glossy chrome plated	RH version	with M6 threaded stubs	□8 or Ø10	loose	screw-on	10 pcs.
b)	212-9022.00-00000	glossy chrome plated	RH version	with countersunk holes Ø6.4mm for M6	Ø6.4	loose	screw-on	10 pcs.
a)	212-9017.00-00000	black	LH version	with M6 threaded stubs	□8 or Ø10	loose	screw-on	10 pcs.
b)	212-9018.00-00000	black	LH version	with countersunk holes Ø6.4mm for M6	Ø6.4	loose	screw-on	10 pcs.
a)	212-9023.00-00000	glossy chrome plated	LH version	with M6 threaded stubs	□8 or Ø10	loose	screw-on	10 pcs.
b)	212-9024.00-00000	glossy chrome plated	LH version	with countersunk holes Ø6.4mm for M6	Ø6.4	loose	screw-on	10 pcs.

	Accessories
754	6-040 **Serrated Screws**

all product details ▸ on DIRAK.com

4-180

Hinge Pr05 180°

[4-185]

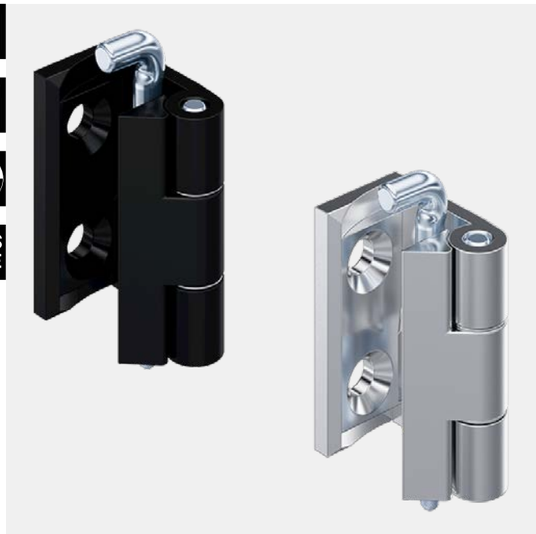

Advantages

- For surface mounted doors for adjacent cabinets.
- Hinge partly visible.
- Door bending 25mm.
- RH / LH application.
- 180° Opening angle.

Materials

- **Frame- and door-part:** zinc die, glossy chrome plated or black
- **Washer:** brass, nickel plated
- **Pin:** steel, zinc plated
- **Fastening washer:** steel, zinc plated

Remarks

(S) Door-thickness min 1.5 - max. 2mm

for door thickness (S) 1.5mm x= 12mm

for door thickness (S) 2 mm x= 15mm

1. washer

2. fastening washer

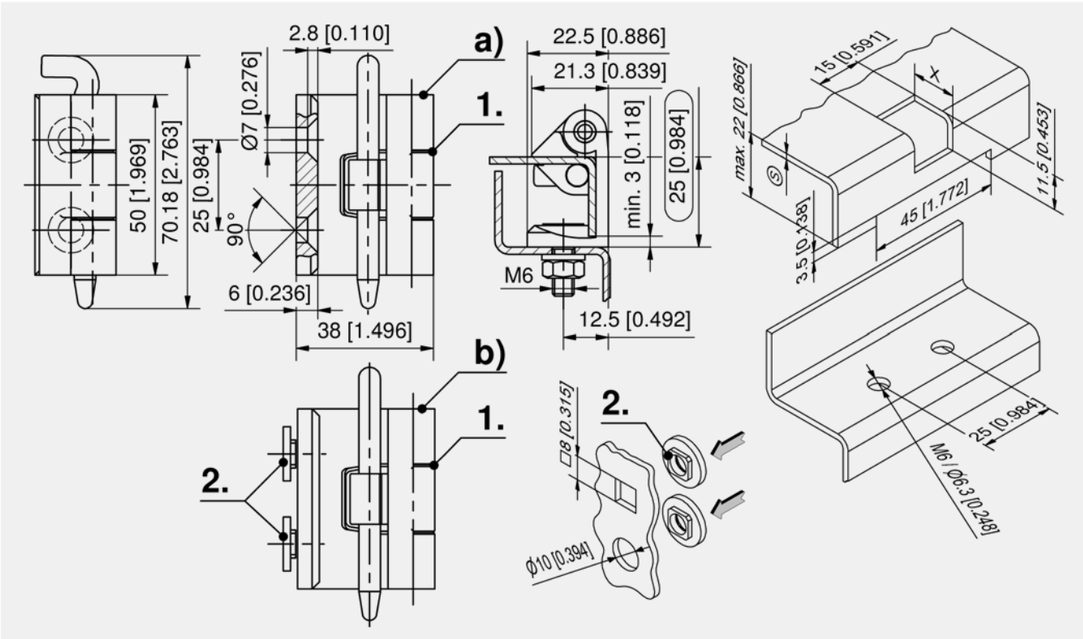

Hinge, zinc die, black

	Part Number	cutout in frame	Frame-part	Pin version	Installation type	Delivery Unit
a)	212-9038.00-00000	Ø6	with countersunk holes for M6	loose	screw-on	10 pcs.
b)	212-9037.00-00000	□8 or Ø10	with countersunk holes for M6 + fastening washer	loose	screw-on	10 pcs.

Hinge, zinc die, glossy chrome plated

	Part Number	cutout in frame	Frame-part	Pin version	Installation type	Delivery Unit
a)	212-9088.00-00000	Ø6	with countersunk holes for M6	loose	screw-on	10 pcs.
b)	212-9050.00-00000	□8 or Ø10	with countersunk holes for M6 + fastening washer	loose	screw-on	10 pcs.

Assembly options

755 6-041 **Countersunk Screws and Hexagon Nuts**

all product details on DIRAK.com
4-185

DST Hinge Pr05 180°

[4-161DST]

Advantages

- Hinge with DIRAK-SNAP-Technology.
- For surface mounted doors for adjacent cabinets.
- Hinge partly visible.
- Door bending 20mm.
- RH / LH application.
- 180° Opening angle.
- Closed cutout.
- Installation of the frame-part by simple tool-less push into the cutout.
- IP65 according DIN EN 60529 (optional).

Materials

- **Frame- and door-part:** zinc die, black
- **Pin and pivot pin:** steel, zinc plated
- **Washers:** brass, nickel plated
- **Snap wedges:** sintered metal, coated

Remarks

Door-thickness (S1) 1.5 - 2mm

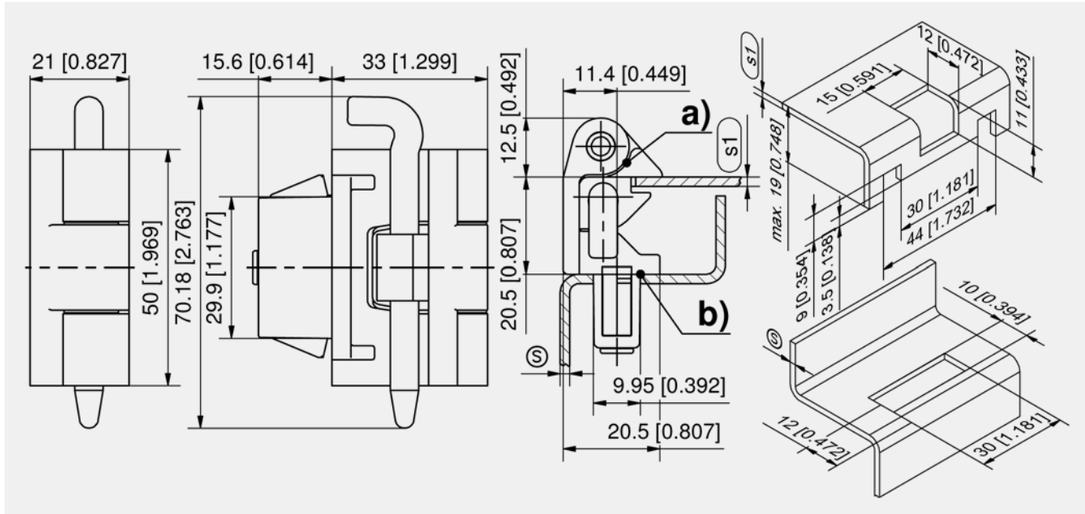

Hinge

	Part Number	Clamping range (S)	Pin version	Installation type	Delivery Unit
a)	412-9003.00-00015	1.2 - 1.7 mm	loose	tool-less	10 pcs.
a)	412-9003.00-00020	1.7 - 2.2 mm	loose	tool-less	10 pcs.
a)	412-9003.00-00025	2.2 - 2.7 mm	loose	tool-less	10 pcs.
a)	412-9003.00-00030	2.7 - 3.2 mm	loose	tool-less	10 pcs.

Accessories

764 292-0306.80-02530 **Tool for uninstallation**
762 292-0401.00-03010 **Cutout-cover**
763 292-0702.15-01030 **Reinforcement plate for cutout**

Function extension

b) 839-3770.00-02022 **O-ring 20 x 2.2mm**

all product details on DIRAK.com
4-161DST

Hinge for Single Cabinet Pr05 180°

[4-155]

Advantages

- For surface mounted doors.
- Hinge partly visible.
- Door bending 25mm.
- RH / LH application.
- 180° Opening angle.
- Lift-off of the door by swiping the door-part to the middle of the door.
- Door-part clicks into the end position audible and visible.

Materials

- **Door-part:** zinc die, black
- **Frame-part:** steel, black
- **Bridge, screws, pin:** steel, zinc plated

Remarks

Fastening screws for the door-part **included**

1. notch
2. disengage
3. hinge must be opened 30°
4. hinge disengage

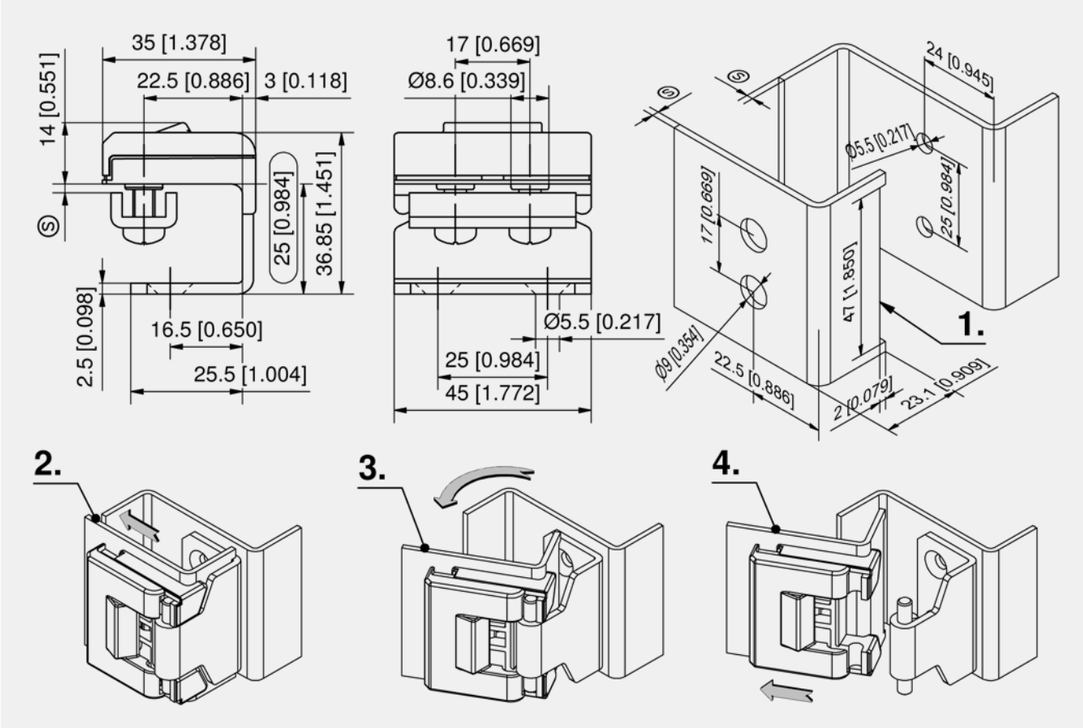

Hinge

Part Number	Pin version	Installation type	Delivery Unit
212-9092.00-00000	pressed in	screw-on	10 pcs.

4-155

◂ all product details on DIRAK.com

Hinge Pr05 180° Stainless Steel

[7-136]

Advantages

- For surface mounted doors for single cabinets.
- Hinge partly visible.
- Door bending 25mm.
- RH / LH application.
- 180° Opening angle.
- Frame-part with M6 threaded stub for installation from inside.
- The frame-part has a reinforcement rib.
- IP65 according to DIN EN 60529 by flat external seal (optinal for version b).

Materials

- **Frame- and door-part:** AISI 316
- **Pin:** AISI 316 or AISI 304

Remarks

(S) Door-thickness min. 1.5mm

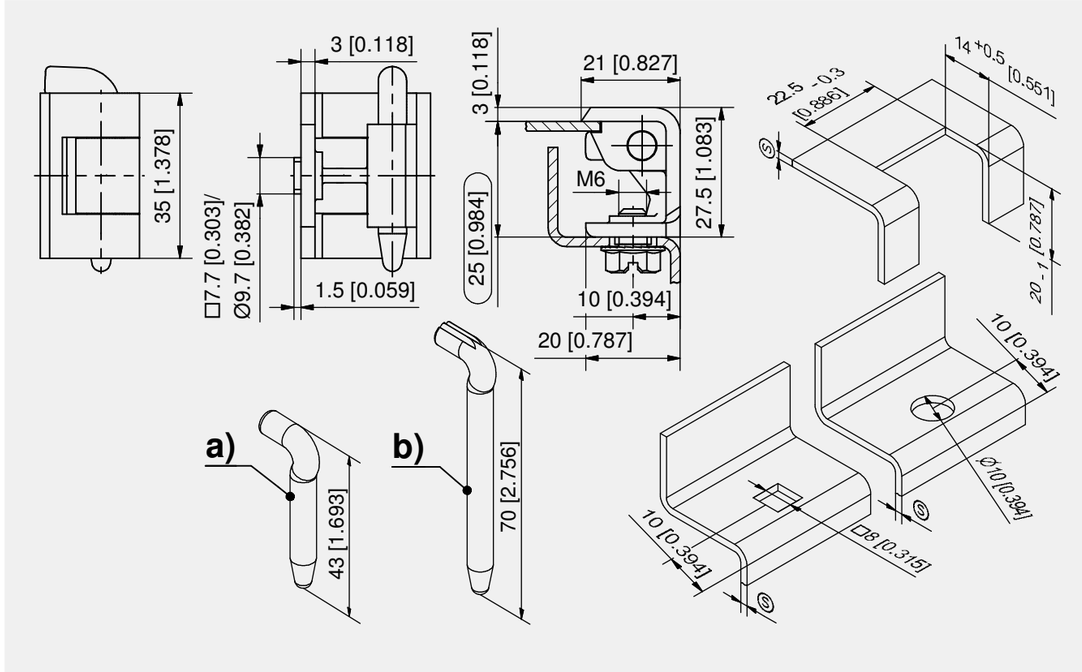

Hinge

	Part Number	Material pin	Pin length L	Frame-part	Pin version	Installation type	Delivery Unit
a)	212-9712.00-00000	AISI 304	43 mm	with M6 threaded stubs	loose	screw-on	10 pcs.
b)	212-9715.00-00000	AISI 316	70 mm	with M6 threaded stubs	loose	screw-on	10 pcs.

+	Accessories
	754 6-040 **Serrated Screws**

*	Function extension
	212-0425.00-00000 **Flat external seal for PS 7-136**

all product details ▸ on DIRAK.com

7-136

Hinge Pr05 180°

[4-181]

Advantages

- For surface mounted doors for adjacent cabinets.
- Hinge partly visible.
- Door-bending 25mm.
- RH / LH application.
- 180° Opening angle.
- For heavy duty applications.
- The door can be lifted-off by loosening the screw of the lower (bottom) part which can then be slid down.
- Horizontal adjusting feature by sliding adjusting bushings.

Materials

- **Frame- and door-part:** zinc die, black
- **Pivot:** steel, zinc plated
- **Washer:** brass, nickel plated

Remarks

1. only notch in case you prefer a narrow gap 1-2mm between door and frame.
2. washer
3. adjusting bushing
4. 180° if hinges are installed on the left **or** on the right
5. 146° if hinges are installed on the left **and** on the right

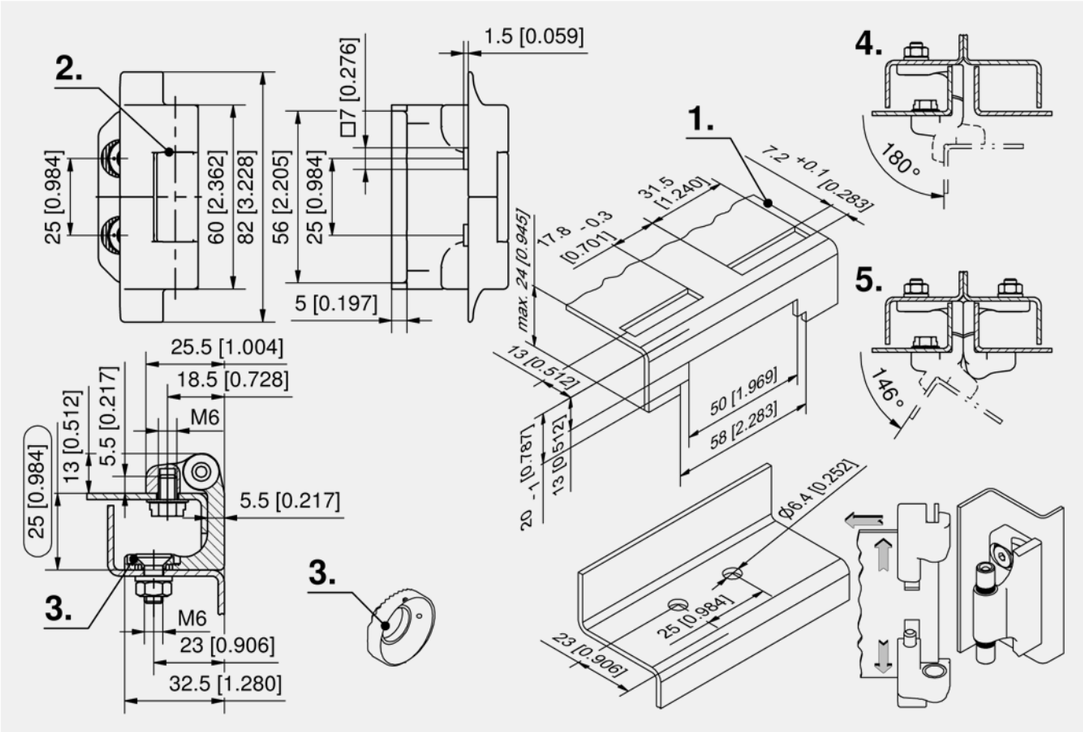

Hinge

	Part Number	Pin version	Installation type	Delivery Unit
a)	212-9308.00-00000	pressed in	screw-on	10 pcs.

all product details on DIRAK.com
4-181

Hinge Pr05 180°

[4-182]

Advantages

- For suface mounted doors for adjacent cabinets.
- Hinge partly visible.
- Door-bending 25mm.
- For RH / LH application.
- 180° Opening angle.
- Easy lift-off through oblong holes (2.).
- Hinge fitting from inside and outside.
- Hinges are supplied including fastening material (5.).
- Frame holes layout is also suitable for mounting dual hooks as on product system 3-170 and 3-910 shown allowing reversibility of door.

Materials

- **Frame- and door-part:** zinc die, black
- **Pin:** steel, zinc plated
- **Washer:** brass
- **Fastening washer:** steel, zinc plated

Remarks

1. possible notching in the door for a gap of approx. 1-2mm between door and frame.

Option b) with fastening washer for holes □8 or Ø10.

3. 180° opening angle attached to LH **or** RH hinges.
4. 146° opening angle attached to LH **and** RH hinges.

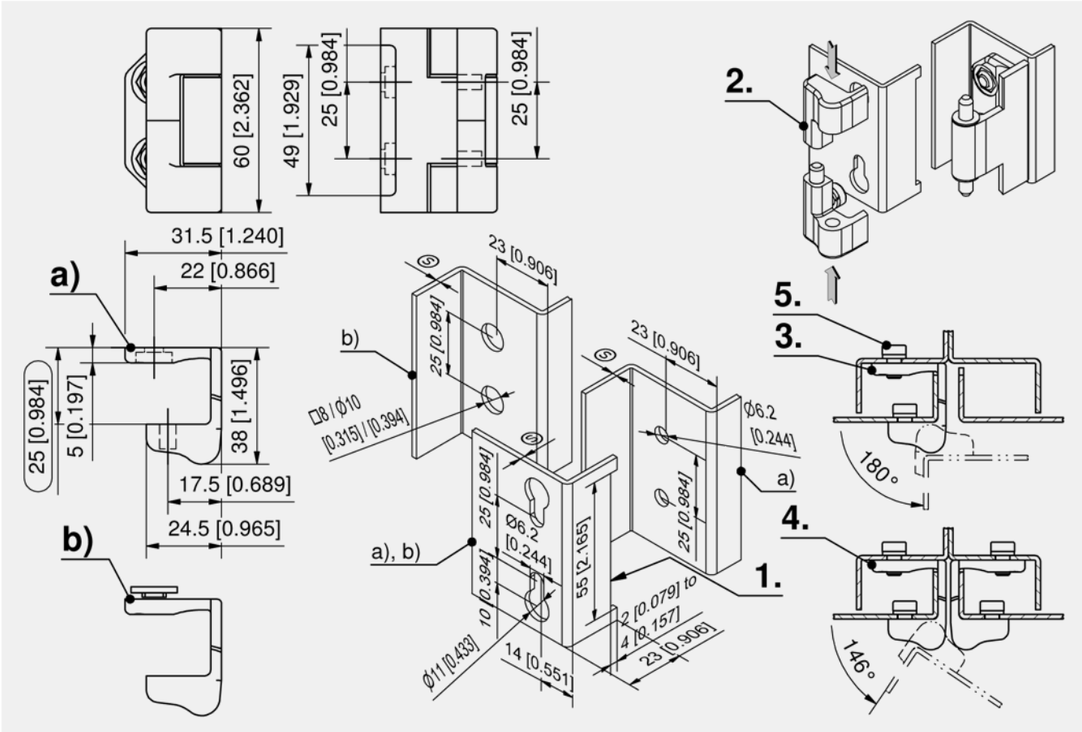

Hinge

	Part Number	Version	Pin version	Installation type	Delivery Unit
a)	212-9302.00-00000	without fastening washer	pressed in	screw-on	12 pcs.
b)	212-9303.00-00000	with fastening washer	pressed in	screw-on	12 pcs.

all product details on DIRAK.com
4-182

DST Hinge Pr05 180°

[4-182.01DST]

Advantages

- Hinge with DIRAK-SNAP-Technology for adjacent cabinets.
- Tool-less installation of door-part and frame-part.
- For surface mounted doors.
- Hinge partly visible.
- Door bending 25mm.
- RH / LH application.
- 180° Opening angle.
- IP65 according to DIN EN 60529 (optional).

Materials

- **Door- and frame-part:** zinc die, black
- **Snap wedges:** sintered metal, coated
- **Pin:** stainless steel
- **Washer:** brass

Remarks

1. at a gap dimension of 1mm the notch heigth is 7mm. Depending on the gap size the height of the notch differs.

Dual hook with DIRAK-SNAP-Technology see product system 3-910DST.

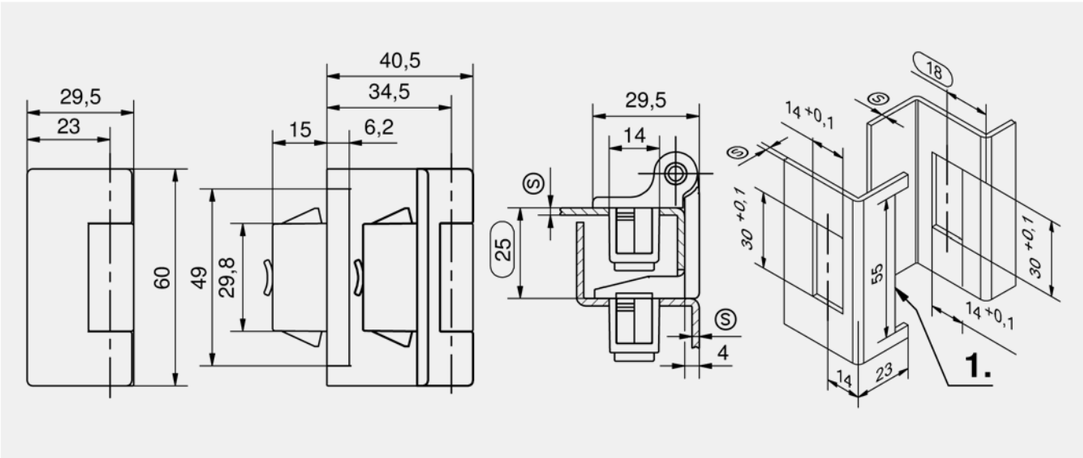

Hinge, material-thickness door/frame different e.g.

Part Number	Clamping range door-part (S)	Clamping range frame-part (S)	Pin version	Installation type	Delivery Unit
412-8001.00-01525	1.2 - 1.7 mm	2.2 - 2.7 mm	pressed in	tool-less	10 pcs.

Hinge, material-thickness door/frame identical e.g.

Part Number	Clamping range (S)	Pin version	Installation type	Delivery Unit
412-9001.00-00015	1.2 - 1.7 mm	pressed in	tool-less	10 pcs.
412-9001.00-00020	1.7 - 2.2 mm	pressed in	tool-less	10 pcs.
412-9001.00-00025	2.2 - 2.7 mm	pressed in	tool-less	10 pcs.
412-9001.00-00030	2.7 - 3.2 mm	pressed in	tool-less	10 pcs.
412-9001.00-00035	3.2 - 3.7 mm	pressed in	tool-less	10 pcs.

	Accessories
764	292-0301.15-00000 **Tool for uninstallation**
764	292-0306.80-02530 **Tool for uninstallation**
762	292-0402.00-03014 **Cutout-cover**
763	292-0701.15-01530 **Reinforcement plate for cutout**

	Function extension
	200-1005.00-02420 **O-ring 24 x 2.0mm**

4-182.01DST

◂ all product details on DIRAK.com

DST Hinge Pr05 180°

[4-182.02DST]

Advantages

- For surface mounted doors.
- Hinge partly visible.
- Door bending 25mm.
- Frame-part snap-in, tool-less.
- Door-part screw-on.
- Due to an enlarged oblong hole, the doors are easy to lift-off.
- IP65 according to DIN EN 60529 (optional).
- 180° opening angle if hinges are installed on the right **or** on the left.
- 140° opening angle if hinges are installed on the right **and** on the left.

Materials

- **Frame- and door-part:** zinc die, black
- **Snap wedges:** sintered metal, coated
- **Pin Ø6x15:** stainless steel
- **Pin Ø6x50:** steel, zinc plated
- **Washers:** brass, nickel plated
- **Spring washers and socket cylinder screws:** steel, zinc plated

Remarks

1. at a gap dimension of 1mm the notch heigth is 7mm. Depending on the gap size the height of the notch differs.

2. two socket cylinder screws M6x10 DIN 7984 and 2 spring washers DIN 7980 are included.

By an identical hole pattern in the frame the hinges can be replaced by dual hooks of product system 3-910DST.

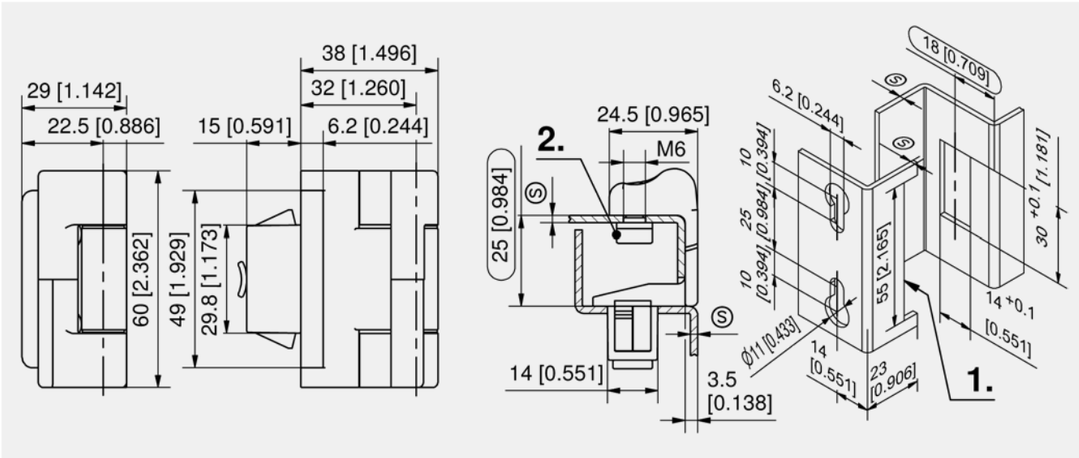

Hinge

Part Number	Clamping range (S)	Pin version	Installation type	Delivery Unit
412-9002.00-00015	1.2 - 1.7 mm	pressed in	tool-less / screw-on	10 pcs.
412-9002.00-00020	1.7 - 2.2 mm	pressed in	tool-less / screw-on	10 pcs.
412-9002.00-00025	2.2 - 2.7 mm	pressed in	tool-less / screw-on	10 pcs.
412-9002.00-00030	2.7 - 3.2 mm	pressed in	tool-less / screw-on	10 pcs.
412-9002.00-00035	3.2 - 3.7 mm	pressed in	tool-less / screw-on	10 pcs.

	Accessories
764	292-0301.15-00000 **Tool for uninstallation**
764	292-0306.80-02530 **Tool for uninstallation**
762	292-0402.00-03014 **Cutout-cover**
763	292-0701.15-01530 **Reinforcement plate for cutout**

	Function extension
	200-1005.00-02420 **O-ring 24 x 2.0mm**

all product details ▸ on DIRAK.com

4-182.02DST

DST Hinge Pr05 180°

[4-182.03DST]

Advantages

- For surface mounted doors.
- Hinge partly visible.
- Door bending 25mm.
- RH / LH application.
- 180° Opening angle.
- Door-part tool-less.
- Frame-part screw-on.

Materials

- **Frame- and door-part**: zinc die, black
- **Snap wedges:** sintered metal, coated
- **Pin Ø6x60:** stainless steel
- **Washers:** brass, nickel plated
- **Screws, nuts and spring washers:** steel, zinc plated

Remarks

1. at a gap dimension of 1mm the notch heigth is 7mm. Depending on the gap size the height of the notch differs.

2. two socket cylinder screws M6x10 DIN 7984 and 2 spring washers DIN 7980 are included.

Dual hook see product system 3-910 and 3-170.

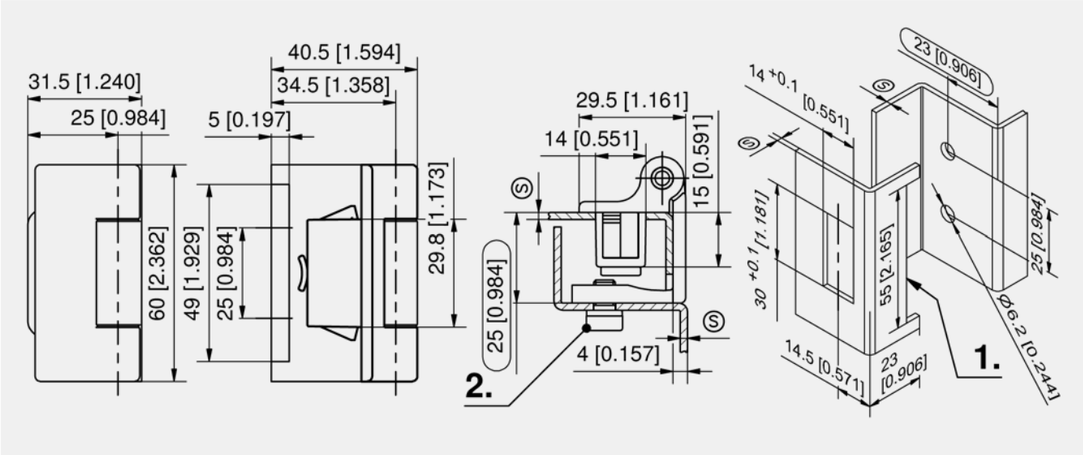

Hinge

Part Number	Clamping range (S)	Pin version	Installation type	Delivery Unit
412-9004.00-00015	1.2 - 1.7 mm	pressed in	tool-less / screw-on	10 pcs.
412-9004.00-00020	1.7 - 2.2 mm	pressed in	tool-less / screw-on	10 pcs.
412-9004.00-00025	2.2 - 2.7 mm	pressed in	tool-less / screw-on	10 pcs.
412-9004.00-00030	2.7 - 3.2 mm	pressed in	tool-less / screw-on	10 pcs.
412-9004.00-00035	3.2 - 3.7 mm	pressed in	tool-less / screw-on	10 pcs.

+	Accessories
764	292-0301.15-00000 **Tool for uninstallation**
764	292-0306.80-02530 **Tool for uninstallation**
762	292-0402.00-03014 **Cutout-cover**
763	292-0701.15-01530 **Reinforcement plate for cutout**

4-182.03DST
all product details on DIRAK.com

Hinge Pr05 180°

[4-182.05]

Advantages

- For surface mounted doors for adjacent cabinets.
- Hinge partly visible.
- Door bending 25mm.
- RH / LH application.
- 180° Opening angle.
- Door-part with pre-fitted and captive pin-halves.
- At about 30° door opening the door can be pulled out, after retracting the pin-halves.
- For door installation, the door is inserted into the frame at approx. 30 ° and the hinge pins are pressed in. (2.)
- Frame holes layout is also suitable for mounting dual hooks as on product system 3-170 or 3-910 shown allowing reversibility of door.

Materials

- **Frame- and door-part and pin:** zinc die, black
- **Detent spring:** spring steel

Remarks

1. possible notching in the door for a gap of approx. 1-2mm between door and frame.

3. 180° opening angle if hinges are installed on the right **or** on the left.

4. 146° opening angle if hinges are installed on the right **and** on the left.

5. four socket cylinder screws M6x10 DIN 7984, 4 spring washers 6 DIN 7980 and 2 nuts M6 DIN 439 are included.

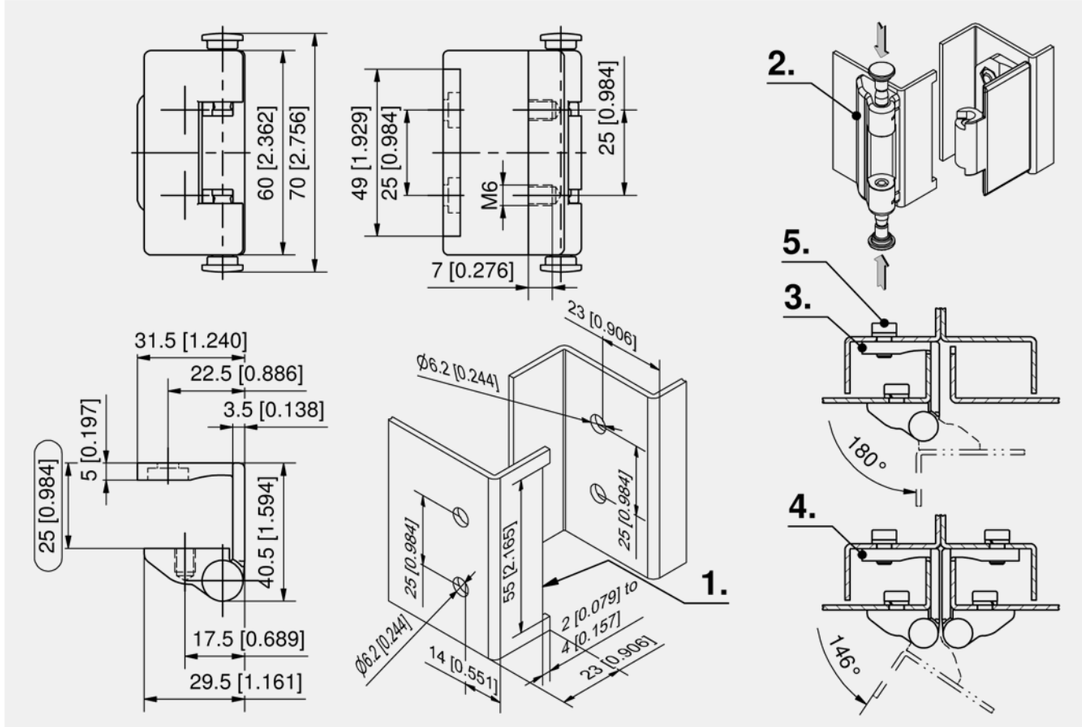

Hinge

Part Number	Version	Pin version	Delivery Unit
212-9085.00-00000	Pin two parts	self-locking, 2-parts	10 pcs.

all product details on DIRAK.com
4-182.05

DST Hinge Pr05 180°

[4-182.05DST]

Advantages

- For surface mounted doors for adjacent cabinets.
- Hinge partly visible.
- Door bending 25mm.
- RH / LH application.
- Opening angle 180°.
- Tool-less installation of frame- and door-part.
- Door-part with pre-fitted and captive pin-halves.
- At about 30° door opening the door can be pulled out, after retracting the pin-halves.
- For door installation, the door is inserted into the frame at approx. 30 ° and the hinge pins are pressed in. **(2.)**
- IP65 according to DIN EN 60529 (optional).

Materials

- **Frame- and door-part and pins:** zinc die, black
- **Snap wedges:** sintered metal, coated
- **Detent spring:** spring steel

Remarks

1. possible notching in the door for a gap of 2mm between door and frame.

3. opening angle 180° if hinges are installed on the left and on the right

Frame holes layout is also suitable for mounting dual hooks as on product system 3-910DST shown allowing reversibility of door.

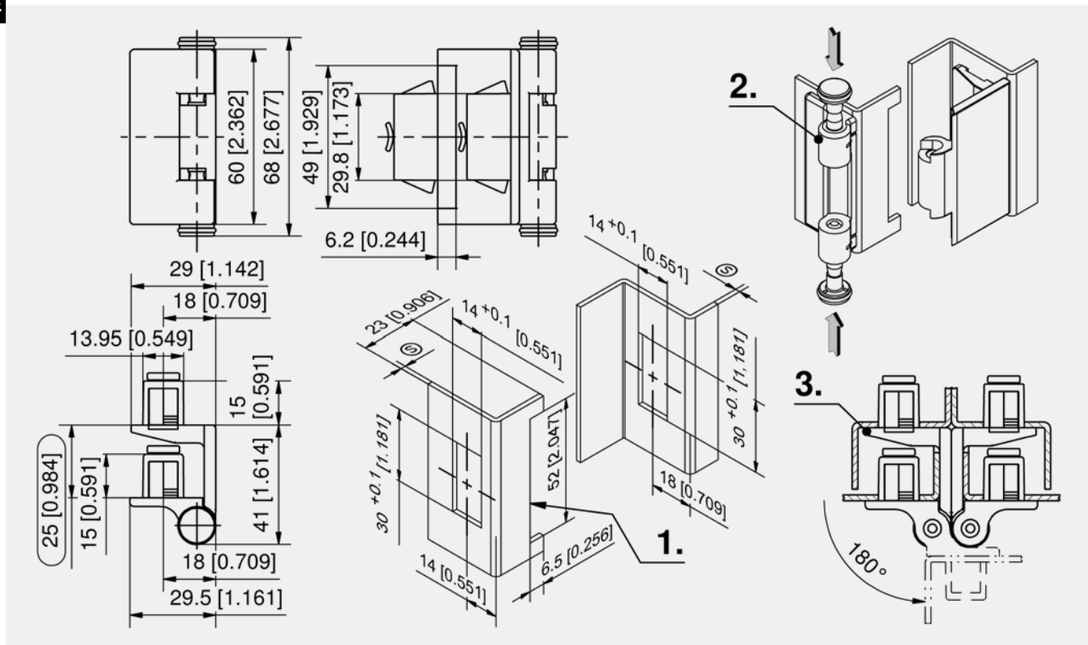

Hinge

Part Number	Clamping range (S)	Pin version	Installation type	Delivery Unit
412-9020.00-00015	1.2 - 1.7 mm	self-locking, 2-parts	tool-less	10 pcs.
412-9020.00-00020	1.7 - 2.2 mm	self-locking, 2-parts	tool-less	10 pcs.
412-9020.00-00025	2.2 - 2.7 mm	self-locking, 2-parts	tool-less	10 pcs.
412-9020.00-00030	2.7 - 3.2 mm	self-locking, 2-parts	tool-less	10 pcs.
412-9020.00-00035	3.2 - 3.7 mm	self-locking, 2-parts	tool-less	10 pcs.

+	Accessories
764	292-0301.15-00000 **Tool for uninstallation**
764	292-0306.80-02530 **Tool for uninstallation**
762	292-0402.00-03014 **Cutout-cover**
763	292-0701.15-01530 **Reinforcement plate for cutout**

*	Function extension
	200-1005.00-02420 **O-ring 24 x 2.0mm**

all product details on DIRAK.com
4-182.05DST

DST Hinge Pr05 180°

[4-182.06DST]

Advantages

- For surface mounted doors for adjacent cabinets.
- Hinge partly visible.
- Door bending 25mm.
- RH / LH application.
- 180° Opening angle.
- Tool-less installation of frame-part.
- Door-part with pre-fitted and captive pin-halves.
- At about 30° door opening the door can be pulled out, after retracting the pin-halves.
- For door installation, the door is inserted into the frame at approx. 30° and the hinge pins are pressed in. **(2.)**
- IP65 according to DIN EN 60529 (optional).

Materials

- **Frame- and door-part and pin:** zinc die, black
- **Snap wedges:** sintered metal, coated
- **Detent spring:** spring steel

Remarks

1. Possible notching in the door for a gap of 2mm between door and frame.

3. 180° Opening angle if hinges are installed on the right **or** on the left.

4. 146° Opening angle if hinges are installed on thr right **and** on the left.

Frame holes layout is also suitable for mounting dual hooks as on product system 3-910DST shown allowing reversibility of door.

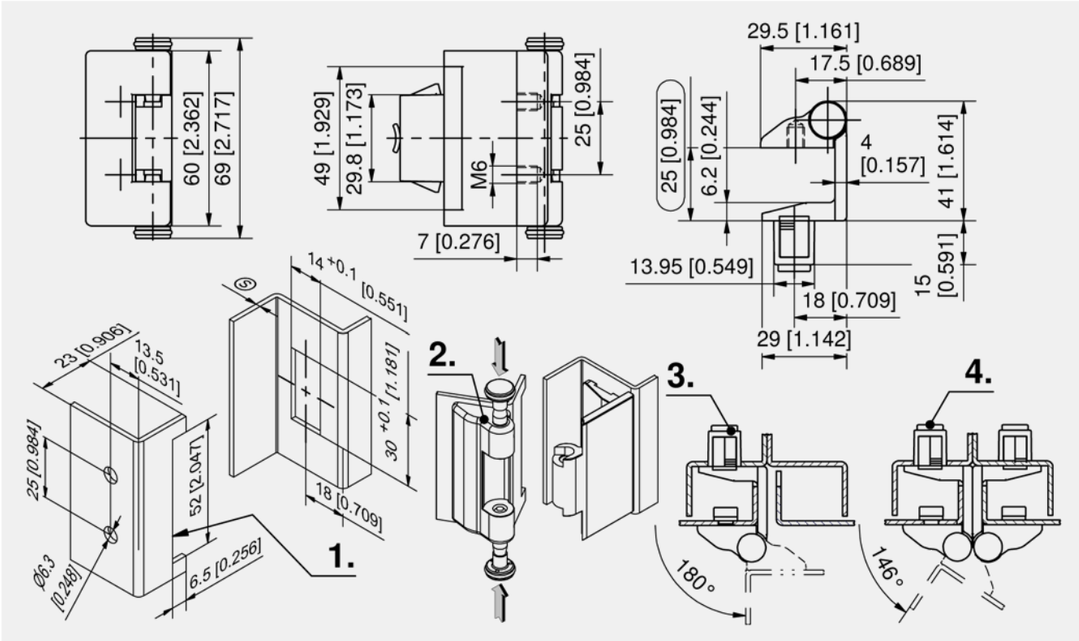

Hinge

Part Number	Clamping range (S)	Pin version	Installation type	Delivery Unit
412-9062.00-00015	1.2 - 1.7 mm	self-locking, 2-parts	tool-less / screw-on	10 pcs.
412-9062.00-00020	1.7 - 2.2 mm	self-locking, 2-parts	tool-less / screw-on	10 pcs.
412-9062.00-00025	2.2 - 2.7 mm	self-locking, 2-parts	tool-less / screw-on	10 pcs.
412-9062.00-00030	2.7 - 3.2 mm	self-locking, 2-parts	tool-less / screw-on	10 pcs.
412-9062.00-00035	3.2 - 3.7 mm	self-locking, 2-parts	tool-less / screw-on	10 pcs.

+	Accessories
764	292-0301.15-00000 **Tool for uninstallation**
764	292-0306.80-02530 **Tool for uninstallation**
762	292-0402.00-03014 **Cutout-cover**
763	292-0701.15-01530 **Reinforcement plate for cutout**

*	Function extension
	200-1005.00-02420 **O-ring 24 x 2.0mm**

all product details on DIRAK.com
4-182.06DST

DST Hinge Pr05 180°

[4-182.07DST]

Advantages

- For surface mounted doors for adjacent cabinets.
- Hinge partly visible.
- Door bending 25mm.
- RH / LH application.
- Opening angle 180°. (**3.**)
- Tool-less installation of door-part.
- Door-part with pre-fitted and captive pin-halves.
- At about 30° door opening the door can be pulled out, after retracting the pin-halves.
- For door installation, the door is inserted into the frame at approx. 30 ° and the hinge pins are pressed in. (**2.**)

Materials

- **Frame- and door-part and pin:** zinc die, black
- **Snap wedges:** sintered metal, coated
- **Detent spring:** spring steel

Remarks

1. Possible notching in the door for a gap of 2mm between door and frame.

Frame holes layout is also suitable for mounting dual hooks as on product system 3-170 or 3-910 shown allowing reversibility of door.

Fastening can be done with low hexagon nuts M6 DIN EN ISO 4035.

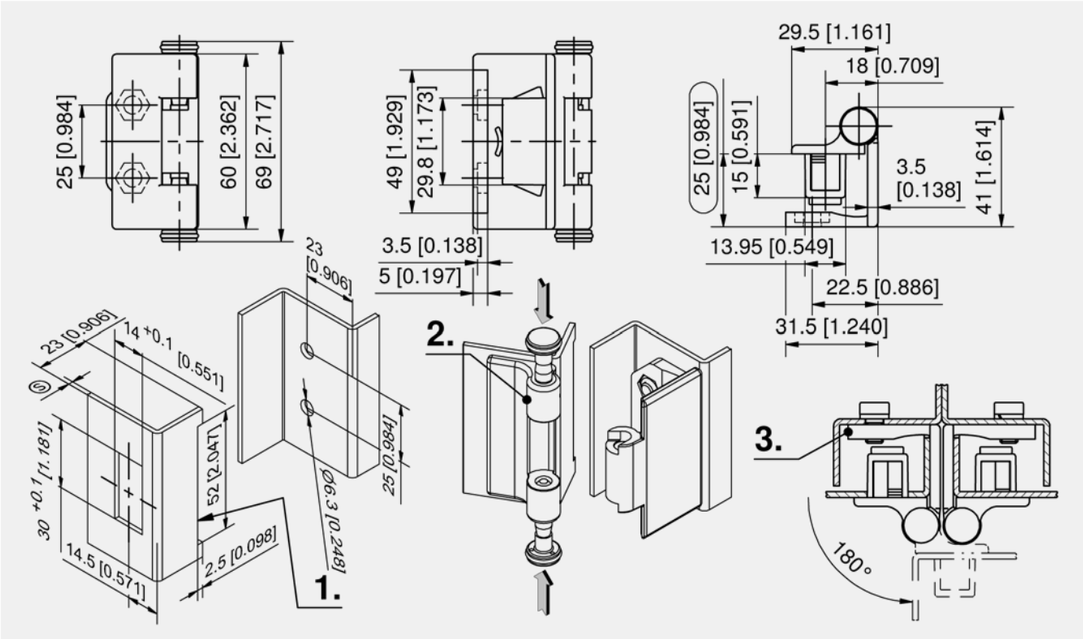

Hinge

Part Number	Clamping range (S)	Pin version	Installation type	Delivery Unit
412-9006.00-00015	1.2 - 1.7 mm	self-locking, 2-parts	tool-less / screw-on	10 pcs.
412-9006.00-00020	1.7 - 2.2 mm	self-locking, 2-parts	tool-less / screw-on	10 pcs.
412-9006.00-00025	2.2 - 2.7 mm	self-locking, 2-parts	tool-less / screw-on	10 pcs.
412-9006.00-00030	2.7 - 3.2 mm	self-locking, 2-parts	tool-less / screw-on	10 pcs.
412-9006.00-00035	3.2 - 3.7 mm	self-locking, 2-parts	tool-less / screw-on	10 pcs.

	Accessories
764	292-0301.15-00000 **Tool for uninstallation**
764	292-0306.80-02530 **Tool for uninstallation**
762	292-0402.00-03014 **Cutout-cover**
763	292-0701.15-01530 **Reinforcement plate for cutout**

4-182.07DST

◂ all product details on DIRAK.com

Hinge Pr05 180°

[4-183]

Advantages

- For surface mounted doors for adjacent cabinets.
- Lift-off.
- Door-bending 25mm.
- RH and LH version.
- 180° Opening angle.
- With M6 threaded stubs for fastening from inside, or Ø6.4mm countersunk holes for fastening from outside.
- The optional notch in the bending (dimension 55) is being concealed by the 60mm wide frame-part.

Materials

a) and b)

- **Door- and frame-part:** zinc die, black or chrome plated
- **Pin:** stainless steel
- **Washer:** brass

b1)

- **Door-part:** zinc die, black
- **Frame-part:** steel, black
- **Pin:** stainless steel
- **Washer:** stainless steel

Remarks

(S) Door-thickness up to 4mm

1. washer fixed

2. possible notching in the door for a gap of approx. 1-2mm between door and frame.

3. 180° opening angle if hinges are installed on the right **and** on the left.

4. the max. torque for the door-part screws is 6Nm.

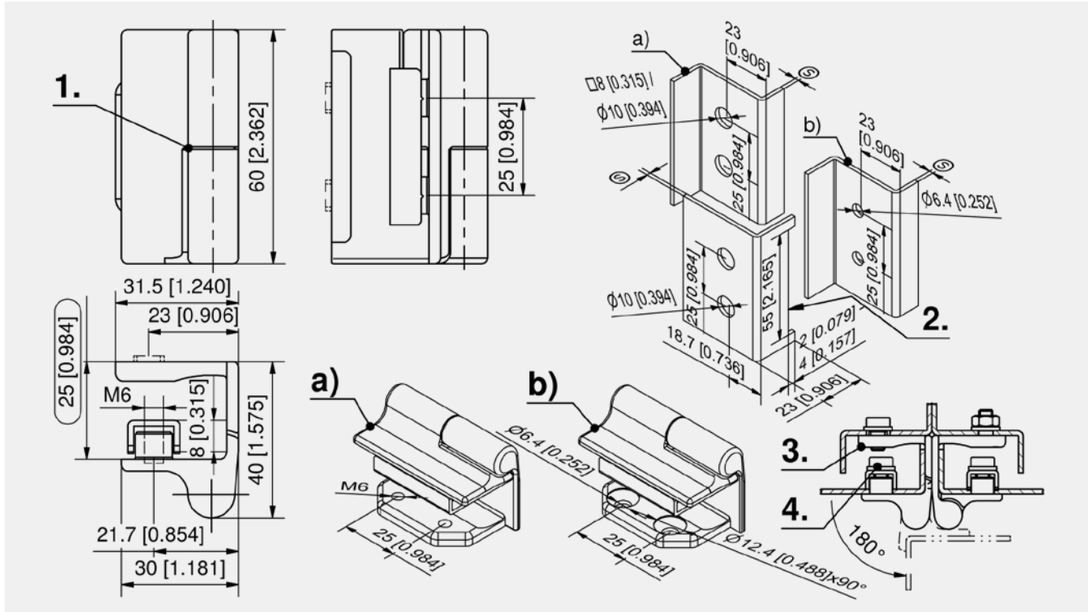

Hinge, frame- and door-part zinc die

	Part Number	Version	Surface	Frame-part	Pin version	Installation type	Delivery Unit
a)	212-9042.00-00000	RH version	glossy chrome plated	with M6 threaded stubs	pressed in	screw-on	10 pcs.
b)	212-9043.00-00000	RH version	glossy chrome plated	with countersunk holes Ø6.4mm for M6	pressed in	screw-on	10 pcs.
a)	212-9044.00-00000	LH version	glossy chrome plated	with M6 threaded stubs	pressed in	screw-on	10 pcs.
b)	212-9045.00-00000	LH version	glossy chrome plated	with countersunk holes Ø6.4mm for M6	pressed in	screw-on	10 pcs.
a)	212-9046.00-00000	RH version	black	with M6 threaded stubs	pressed in	screw-on	10 pcs.
b)	212-9047.00-00000	RH version	black	with countersunk holes Ø6.4mm for M6	pressed in	screw-on	10 pcs.
a)	212-9048.00-00000	LH version	black	with M6 threaded stubs	pressed in	screw-on	10 pcs.
b)	212-9049.00-00000	LH version	black	with countersunk holes Ø6.4mm for M6	pressed in	screw-on	10 pcs.

Hinge, frame-part steel, door-part zinc die

	Part Number	Version	Surface	Frame-part	Pin version	Installation type	Delivery Unit
b1)	212-9082.00-00000	RH version	black	with countersunk holes Ø6.4mm for M6	pressed in	screw-on	10 pcs.
b1)	212-9083.00-00000	LH version	black	with countersunk holes Ø6.4mm for M6	pressed in	screw-on	10 pcs.

all product details ▸ on DIRAK.com

4-183

DST Hinge Pr05 180°

[4-184.01DST]

Advantages

- For surface mounted doors for adjacent cabinets.
- Hinge partly-concealed.
- Door bending 20mm.
- RH and LH version.
- 180° opening angle.
- Tool-less installation of frame- and door-part.
- Door can be lifted-off at 30° opening angle.
- Lift-off safety, the door can't be lifted-off in closed position.
- IP65 according to DIN EN 60529 by flat external seal (optional).

Materials

- **Frame- and door-part:** zinc die, black
- **Snap wedges:** sintered steel
- **Pin and spring:** stainless steel
- **Washer:** brass, nickel plated
- **Plug:** NBR, black

Remarks

For uninstallation (1.) of the frame-part remove plug (2.). Frame-part can be disengaged from outside with a screw driver.

Possible notching in the door for a gap of approx. 1-2mm between door and frame.

Attention: If you use the external seal (only neccessary for the frame part), please order a larger clamping range.

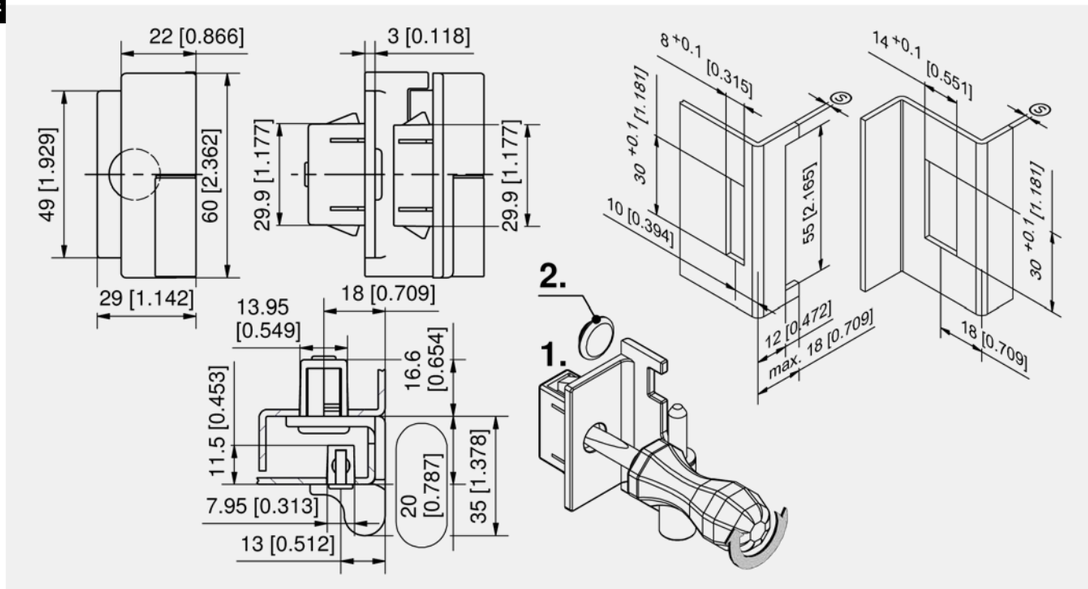

Hinge

Part Number	Version	Clamping range frame-part (S)	Clamping range door-part (S)	Pin version	Installation type	Delivery Unit
412-9008.00-01515	RH version	1.4 - 1.7 mm	1.3 - 2.0 mm	pressed in	tool-less	10 pcs.
412-9008.00-02020	RH version	1.8 - 2.1 mm	1.8 - 2.5 mm	pressed in	tool-less	10 pcs.
412-9008.00-02523	RH version	2.2 - 2.5 mm	2.3 - 3.0 mm	pressed in	tool-less	10 pcs.
412-9008.00-03030	RH version	2.8 - 3.1 mm	2.8 - 3.5 mm	pressed in	tool-less	10 pcs.
412-9009.00-01515	LH version	1.4 - 1.7 mm	1.3 - 2.0 mm	pressed in	tool-less	10 pcs.
412-9009.00-02020	LH version	1.8 - 2.1 mm	1.8 - 2.5 mm	pressed in	tool-less	10 pcs.
412-9009.00-02523	LH version	2.2 - 2.5 mm	2.3 - 3.0 mm	pressed in	tool-less	10 pcs.
412-9009.00-03030	LH version	2.8 - 3.1 mm	2.8 - 3.5 mm	pressed in	tool-less	10 pcs.

	Accessories
763	292-0701.15-01530 **Reinforcement plate for cutout**
763	292-0702.15-01030 **Reinforcement plate for cutout**
762	292-0402.00-03014 **Cutout-cover**
764	292-0306.80-02530 **Tool for uninstallation**

	Function extension
	209-3301.00-00000 **Flat external seal**

4-184.01DST
◂ all product details on DIRAK.com

DST Hinge Pr05 180°

[4-184.05DST]

Advantages

- For surface mounted doors for adjacent cabinets.
- Hinge partly-concealed.
- Door bending 25mm.
- RH and LH version.
- 180° opening angle.
- Tool-less installation of door-part.
- Door can be lifted-off at 30° opening angle.
- Lift-off safety, the door can't be lifted-off in closed position.

Materials

- **Door-part:** zinc die, black
- **Frame-part:** steel, black
- **Snap wedges:** sintered steel
- **Pin and spring:** stainless steel
- **Washer:** brass, nickel plated

Remarks

Possible notching in the door for a gap of approx. 1-2mm between door and frame.

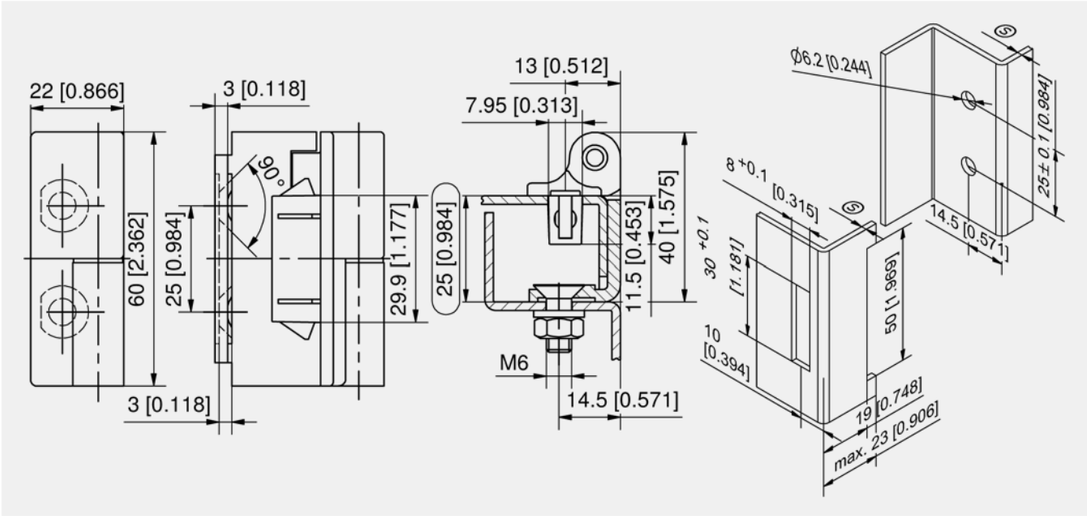

Hinge

Part Number	Version	Clamping range door-part (S)	Pin version	Installation type	Delivery Unit
412-9016.00-00015	RH version	1.3 - 2.0 mm	pressed in	tool-less / screw-on	10 pcs.
412-9016.00-00020	RH version	1.8 - 2.5 mm	pressed in	tool-less / screw-on	10 pcs.
412-9016.00-00025	RH version	2.3 - 3.0 mm	pressed in	tool-less / screw-on	10 pcs.
412-9016.00-00030	RH version	2.8 - 3.5 mm	pressed in	tool-less / screw-on	10 pcs.
412-9017.00-00015	LH version	1.3 - 2.0 mm	pressed in	tool-less / screw-on	10 pcs.
412-9017.00-00020	LH version	1.8 - 2.5 mm	pressed in	tool-less / screw-on	10 pcs.
412-9017.00-00025	LH version	2.3 - 3.0 mm	pressed in	tool-less / screw-on	10 pcs.
412-9017.00-00030	LH version	2.8 - 3.5 mm	pressed in	tool-less / screw-on	10 pcs.

	Accessories
763	292-0702.15-01030 **Reinforcement plate for cutout**
764	292-0306.80-02530 **Tool for uninstallation**

all product details ▸ on DIRAK.com
4-184.05DST

Detent Hinge 60x60 Pr01 175°

[4-243]

Advantages

- Latching positions at -5°, 85° and 175°.
- The negative latching position can keep the door firmly shut even against a rubber seal.
- Beginning of compression at a position of approx. 5°.
- For nested doors.
- Hinge visible.
- RH / LH application.

Materials

- **Hinge halves:** zinc die, black

Remarks

1. beginning of compression

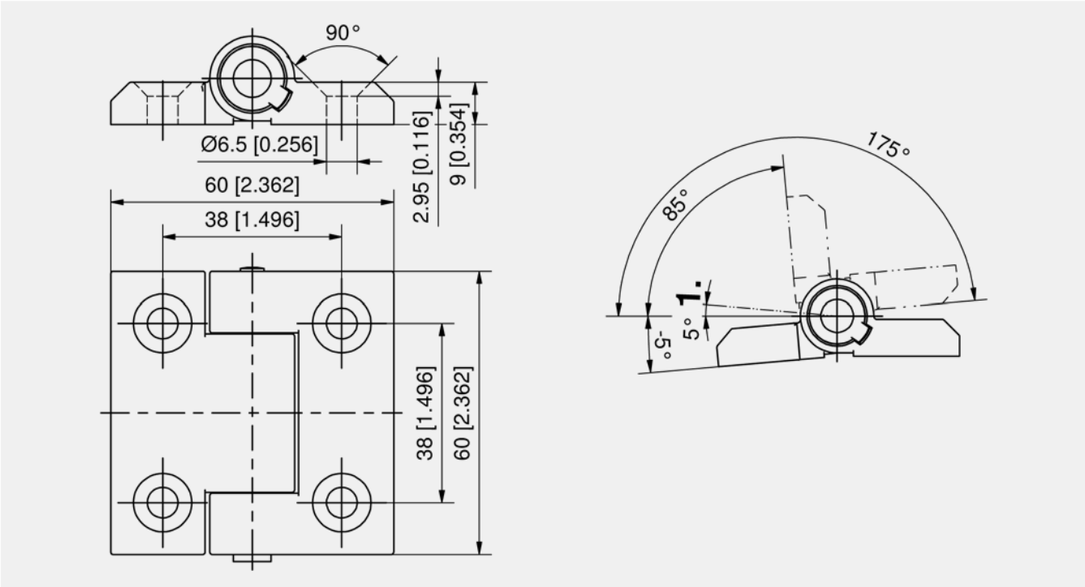

Detent hinge

Part Number	Pin version	Installation type	Delivery Unit
218-9213.00-00000	pressed in	screw-on	6 pcs.

4-243
all product details on DIRAK.com

Detent Hinge Pr01 120° / 180° Stainless Steel

[7-222]

Advantages

- For nested doors.
- Hinge visible.
- RH / LH application.
- Variant a) with a detend position at 120° and 0°.
- Variant b) 180° Opening angle.

Materials

- **Frame-part:** AISI 440B, untreated, hardened
- **Door-part variant a):** AISI 440B, black coated, hardened
- **Door-part variant b):** zinc die, black coated
- **Pins:** steel, zinc plated

Remarks

1. set screw for adjusting the latching force
2. closed flap

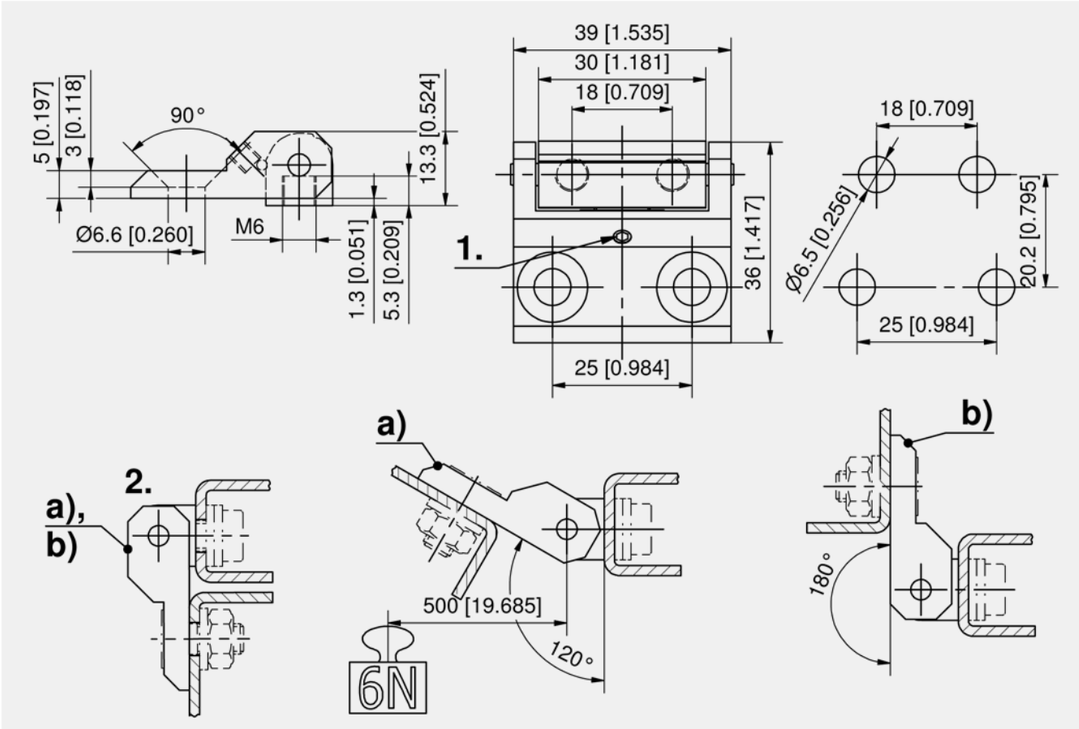

Detent hinge

Part Number	Version	Opening angle	Pin version	Installation type	Delivery Unit
250-9103.00-00000	with detend function	120°	pressed in	screw-on	1 pc.
250-9104.00-00000	without detent function	180°	pressed in	screw-on	1 pc.

all product details on DIRAK.com
7-222

Hinges

Torque Hinge Pr01 270°

[4-708]

Advantages

- Hinge with constant torque throughout its full range of motion.
- For nested doors.
- Hinge visible.
- RH / LH application.
- 270° Opening angle.
- Continuously adjustable torque 0-5Nm. The adjustment of the torque is made with a hexagon socket key size 4 in the hinge shaft.
- The doors may be moved into any position and remain at exactly that position.
- Free from any detent.
- Also usable as coverstay for light duty application.

Materials

- **Hinge and covers:** PA, black
- **Pin:** stainless steel

Remarks

Installation with hexagon screws or hexagon nuts M6.

1. cover

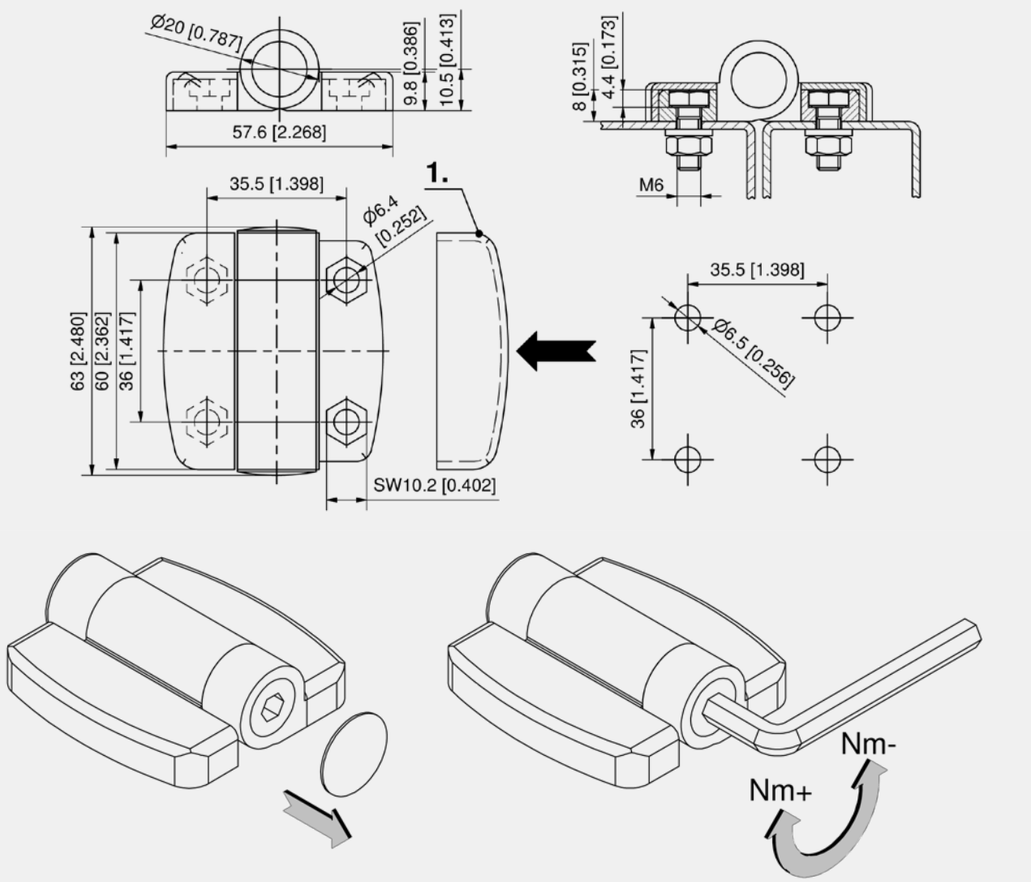

Torque hinge

Part Number	NM (both directions)	Pin version	Installation type	Delivery Unit
703-9011.00-00000	0-5	screwed	screw-on	10 pcs.

4-708

◂ all product details on DIRAK.com

Torque Hinge Pr01 270°

[4-709]

Advantages

- Hinge with constant torque throughout its full range of motion.
- For nested doors.
- Hinge visible.
- RH / LH application.
- 270° Opening angle.
- Continuously adjustable torque 0-5Nm. The adjustment of the torque is made with a hexagon socket key size 4 in the hinge shaft.
- The doors may be moved into any position and remain at exactly that position.
- Free from any detent.
- Also usable as coverstays for light duty application.

Materials

- **Hinge and covers:** PA, black
- **Pin:** stainless steel

Remarks

Installation with hexagon screws or hexagon nuts M6.

1. cover

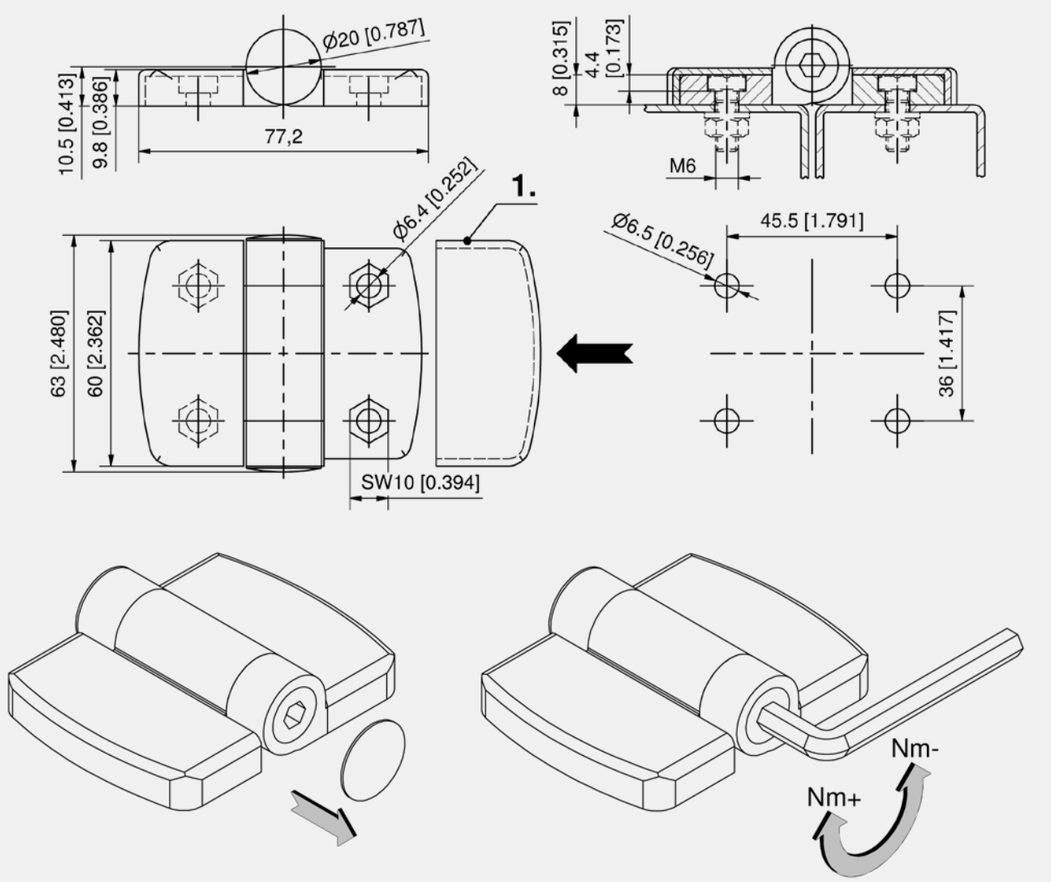

Torque hinge

Part Number	NM (both directions)	Pin version	Installation type	Delivery Unit
703-9012.00-00000	0-5	screwed	screw-on	10 pcs.

all product details ▸ on DIRAK.com

4-709

Torque Hinge Pr01 270°

[4-701]

Advantages

- Hinge with constant torque throughout its full range of motion.
- For nested doors.
- Hinge visible.
- RH / LH application.
- 270° Opening angle.
- Free from any detent.
- Springback typically <1°.
- Life of > 20,000 cycles.

Materials

- **Housing:** zinc die, black coated
- **Shaft and torque clips:** hardened steel

Remarks

Fastening: for example with M4 screws DIN EN ISO 4762.

Price and delivery time on request!

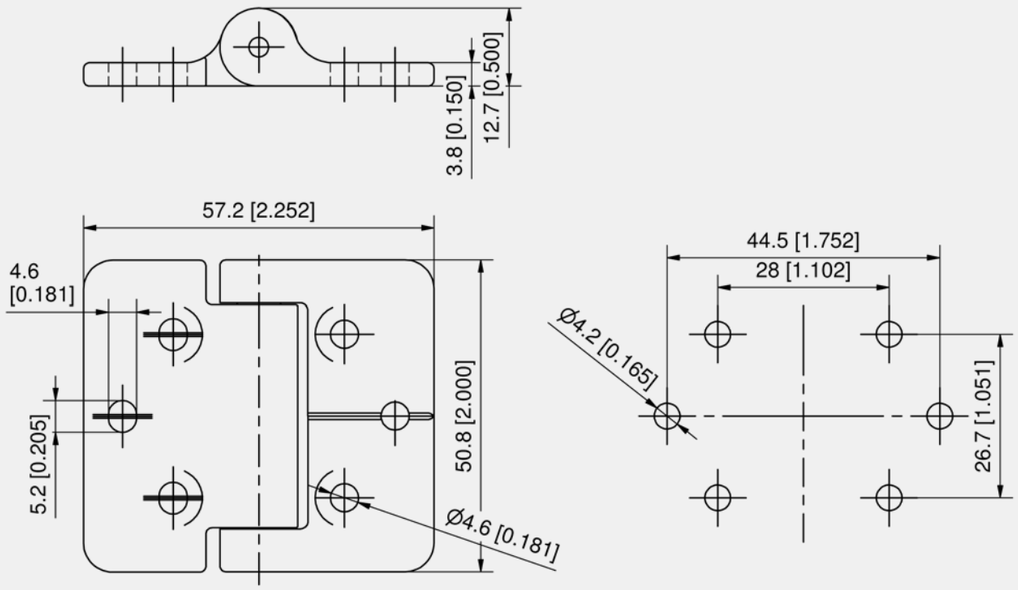

Torque hinge

Part Number	NM (both directions)	Pin version	Installation type	Delivery Unit
703-9001.00-00120	1,36	pressed in	screw-on	10 pcs.
703-9001.00-00200	2,26	pressed in	screw-on	10 pcs.

4-701
◂ all product details on DIRAK.com

Torque Hinge Pr01 270°

[4-702]

Advantages

- Hinge with constant torque throughout its full range of motion.
- For nested doors.
- Hinge visible.
- RH / LH application.
- 270° Opening angle.
- Free from any detent.
- Springback typically < 1°.
- Life of > 20,000 cycles.

Materials

- **Housing:** zinc die, black coated
- **Shaft and torque clips:** hardened steel

Remarks

Fastening: for example with M4 screws DIN EN ISO 4762.

Price and delivery time on request!

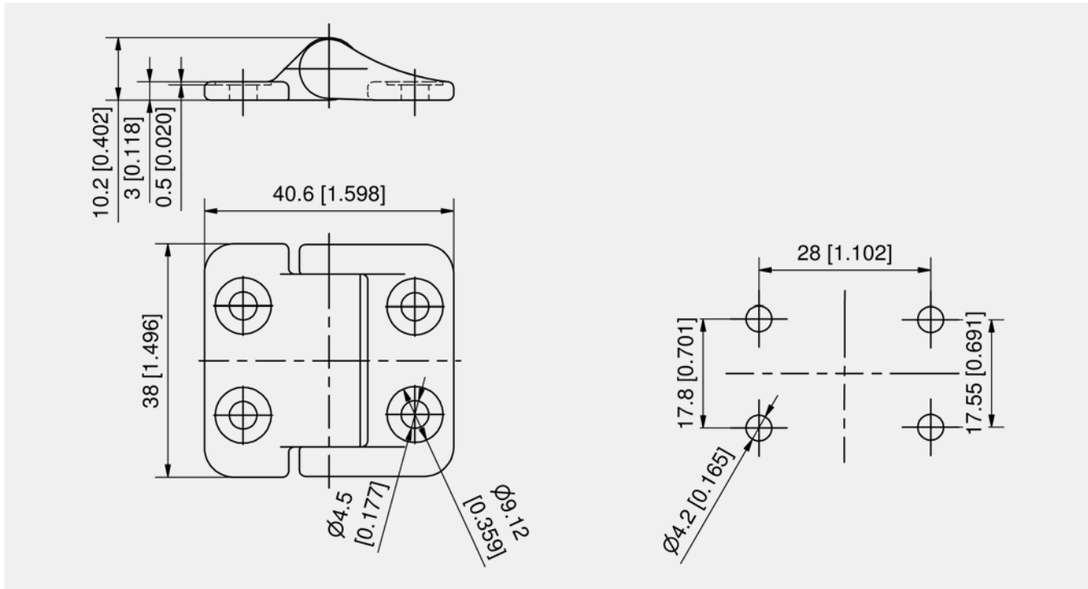

Torque hinge

Part Number	NM (both directions)	Pin version	Installation type	Delivery Unit
703-9002.00-00120	1,22	pressed in	screw-on	10 pcs.
703-9002.00-00200	2,01	pressed in	screw-on	10 pcs.

all product details ▸ on DIRAK.com
4-702

Torque Hinge Pr01 270°

[4-703]

Advantages

- Hinge with constant torque throughout its full range of motion.
- For nested doors.
- Hinge visible.
- RH / LH application.
- 270° Opening angle.
- Free from any detent.
- Springback typically < 1°.
- Life of > 10,000 cycles.

Materials

- **Housing:** PA
- **Shaft and torque clips:** hardened steel

Remarks

Fastening: for example with M4 screws DIN EN ISO 4762.

Price and delivery time on request!

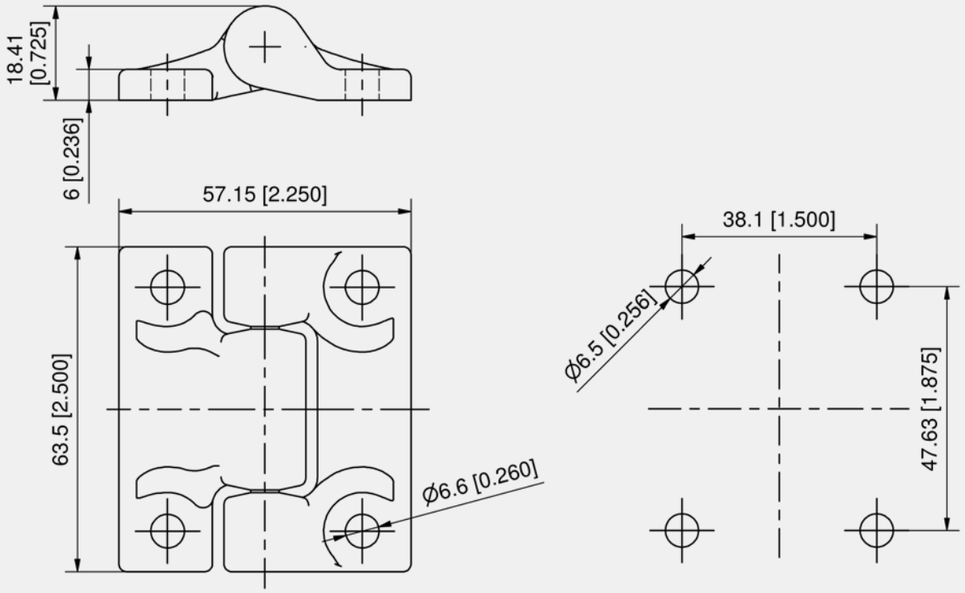

Torque hinge

Part Number	NM (both directions)	Pin version	Installation type	Delivery Unit
703-9003.00-00140	1,38	pressed in	screw-on	10 pcs.
703-9003.00-00220	2,16	pressed in	screw-on	10 pcs.

4-703

all product details on DIRAK.com

Hinge Pr05 180° Stainless Steel

See page 631

Gaskets

Rounding corners.

With the corner radius you can lay gaskets precisely and in corners so they are always in the optimum radius.

Page 685

Well shielded.

DIRAK EMC gaskets support electromagnetic shielding of housings and help to reduce interference.

Page 673

Page 664

Certified quality.

Products and materials with this icon are UL-certified and meet the relevant standards. Do you need more information? Just contact us.

ELIMINATES INCORRECT ASSEMBLY!

Due to the symmetrical structure of the DIRAK four-lip profile, it cannot be installed incorrectly and firm seating is guaranteed.

Gaskets by Mounting Type

Self-clamping

Page: **664–665, 670–683**

Self-adhesive

Page: **665–667**

Round Profiles

Page: **668–669**

Explanations and instructions

Elastomer designation in accordance with ASTM D 1418-76

CR Polychlorinated butadiene e.g. Neoprene
EPDM Ethylene-propylene terpolymers e.g. Keltan
NBR Acrylonitrile butadiene copolymers e.g. Perbunan
NR Natural rubber (polyisoprene)

Elastomers and their properties

Chemical designation	Natural rubber	Nitrile rubber	Chloroprene rubber	Ethylene-Propylene-diene-rubber
Acronym according to ASTM D 1418	NR	NBR	CR	EPDM
Hardness range (Shore A) +/-5	40-90	45-90	40-90	40-85
Tear resistance N/mm²	4-15	4-14	5-15	6-13
Rebound resilience at 20°C	++	0	+	+
Abrasion resistance	++	+	+	+
Elastic properties	++	+	+	+
Chemical resistance [A]	+	0	+	++
Resistance to oil [A]	-	++	+	-
Resistance to fuels [A]	none	+	-	-
Solvent resistance [A]	-	+	+	0
Temperature resistance °C [B]	-40 to +80	-30 to +100	-25 to +100	-40 to +100
Ozone resistance	0	0	++	++
Gen. weathering resistance	+	+	++	++
Gas impermeability	0	+	+	0
Resistance to permanent deformation [C]	++	+	+	+
Bonding to metal	++	0	+	0
Dielectric properties	++	-	0	++

Explanation of symbols

A = Because of the numerous possible chemicals, solvents, application-temperatures and duration, the values stated may vary in individual cases. In particular, a type of elastomer that generally displays a low resistance may be very resistant to certain media.

B = These are limits that may fluctuate according to the composition of the mixture. Continuous use at limit levels brings about a change in the physical values. Special elastomer mixtures are necessary for extreme loads.

C = In general, the resistance declines at relatively low or high temperatures.

++ = excellent to very good
+ = good
o = satisfactory to moderate
- = low to poor

Overview

664 Four Lips Channel Sealing Profile EPDM [5-100]

665 Self-Clamping Profiles EPDM [5-110.01]

665 Castellated Profile EPDM [5-127.01]

666 Rectangular Seals EPDM / CR [5-120]

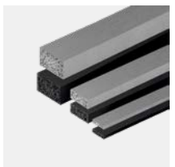

667 Rectangular Seals EPDM / CR [5-125]

668 Round Profiles EPDM / CR [5-127]

670 Window Seals EPDM [5-130]

671 Window Seal EPDM [5-131]

672 Window Seals EPDM / NBR[5-140]

673 Clip-on EMC/RFI Sealing Profiles [5-149]

674 Clip-on Sealing Profiles EPDM / NBR [5-150]

675 Clip-on Sealing Profiles EPDM / NBR [5-151]

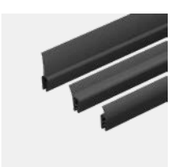

676 Clip-on Sealing Profiles EPDM [5-152]

677 Clip-on Sealing Profiles PVC / EPDM [5-153]

678 Clip-on Sealing Profiles PVC / EPDM [5-154]

679 Special Profiles EPDM [5-155]

680 Channel Sealing Profiles PVC [5-110.02]

681 Profile for Double Doors EPDM[5-156]

682 Edge Protections PVC [5-160]

683 Edge Protection EPDM [5-161]

684 Accessories for Profiles [5-170]

685 Radius Adapter [5-171]

686 Rubber Bumpers EPDM / NR [5-950.01]

686 Mushroom Type Bumpers EPDM / NR [5-950.02]

Four Lips Channel Sealing Profile EPDM

[5-100]

Advantages

- High tolerance sealing at minimal compression.
- Balanced sealing properties between gasket/frame and gasket/door.
- Special lips on the profiles allow defined longitudinal movement but prevent the profiles from falling out when opening the door.
- The profile characteristics are the same for both high-pressure and vacuum applications.
- They can be used for 90° corners without warping or folding.
- The double symmetry prevents incorrect fitting.
- Tool-less installation by simply pressing into the channel.
- **Tested according to UL 157 and UL 50E.**

Materials

- **Sponge rubber quality:** EPDM, black

Remarks

1. not compressed
2. compressed
3. groove width must not be smaller than 8.6mm.

The best sealing result is only achieved in case the gasket can move freely in the groove and is only hold in position by the 2 central "lips".

Note Tolerances!

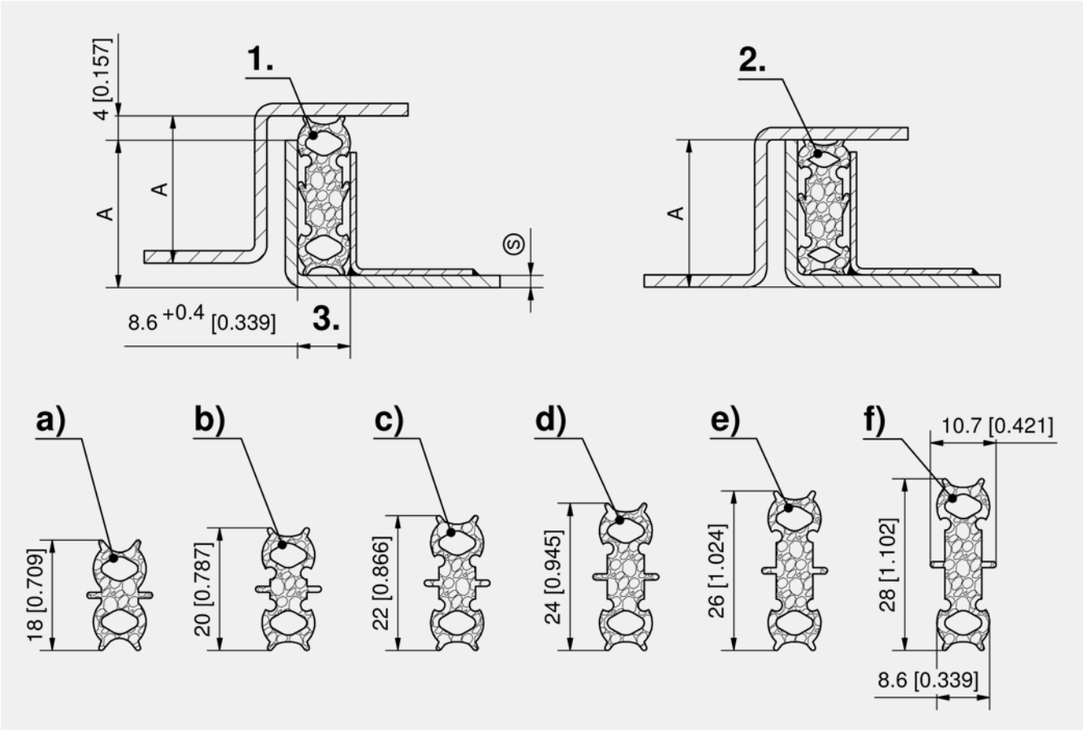

Four lips channel sealing profile EPDM

	Part Number	Bending	Width W	Height H	Collar length	Delivery Unit
a)	209-0118.00-00000	16 mm	8.6 mm	18 mm	40 m	40 m
b)	209-0120.00-00000	18 mm	8.6 mm	20 mm	40 m	40 m
c)	209-0122.00-00000	20 mm	8.6 mm	22 mm	40 m	40 m
d)	209-0124.00-00000	22 mm	8.6 mm	24 mm	40 m	40 m
e)	209-0126.00-00000	24 mm	8.6 mm	26 mm	40 m	40 m
f)	209-0128.00-00000	26 mm	8.6 mm	28 mm	40 m	40 m

5-100

◂ all product details on DIRAK.com

Self-Clamping Profiles EPDM

[5-110.01]

Advantages

- Easy assembly by pressing on a sheet metal edge.
- Small bending radii.
- **Tested according to UL 157 and UL 50 E.**

Materials

- **Self-Clamping Profile:** EPDM, black

Remarks

Note Tolerances!

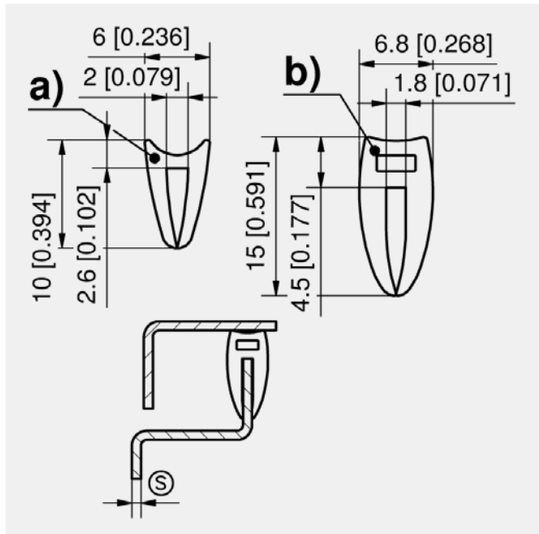

Self-clamping profiles, EPDM

	Part Number	Width W	Height H	Collar length	Delivery Unit
a)	209-0301.00-00000	6 mm	10 mm	50 m	50 m
b)	209-0302.00-00000	6.8 mm	15 mm	50 m	50 m

Castellated Profile EPDM

[5-127.01]

Advantages

- Self-adhesive and non-stretching.
- **Tested according to UL 157 and UL 50 E.**

Materials

Castellated profile: EPDM, black

Storability: 6 months

Remarks

Note Tolerances!

1. adhesive film

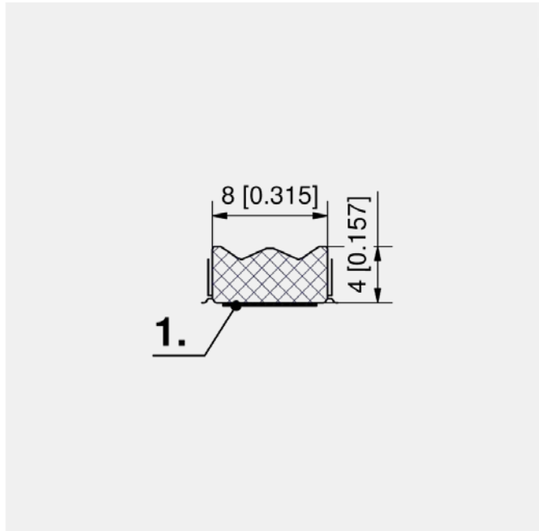

Castellated profile

Part Number	Width W	Height H	Collar length	Delivery Unit
209-1401.00-00000	8 mm	4 mm	125 m	125 m

all product details ▸ on DIRAK.com

5-110.01

5-127.01

Rectangular Seals EPDM / CR

RoHS WEEE

Advantages

- One side self-adhesive and non-stretching.
- Closed cells.
- Highly water and air tight.
- Water absorption of 5% maximum on the surface possible.
- Material **CR** is oil resistant, inert or anti-bacterial according to DIN EN ISO 846-C and is inert or fungistatic according to DIN EN ISO 846-A.
- Material **EPDM** is UV resistant and fullfils the Norms Fire resistance to FMVSS 302: SE, Burn Rate <100mm/min, from material thickness ≥ 3 mm.

Materials

- **Rectangular seals:** EPDM or CR, black
- **Shelf life: 6 months**

Remarks

Order example: EPDM tape 30 wide, 10 thick = 225-3010, CR tape 30 wide, 10 thick = 226-3010

Over 15mm thickness in strips of 1m. Other dimensions are available on request. (Delivery time 3 weeks)

Note Tolerances!

Meets the standards: Fire behavior according to FMVSS 302: SE, burning rate <100mm/min, from material thickness ≥ 2mm. Fire behavior listed according to UL94 (E321195): HF-1 from material thickness ≥ 4mm. Complies with the classification according to R24 HL2 - EN 45545-2.

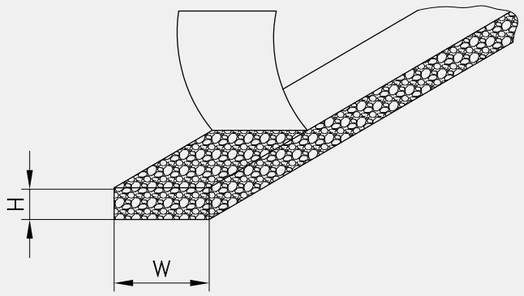

Rectangular seals

Part Number	Width W	Height H	Material	Collar length	Delivery Unit
225-1003.00-00000	10 mm	3 mm	EPDM	20 m	20 m
225-1004.00-00000	10 mm	4 mm	EPDM	20 m	20 m
225-1005.00-00000	10 mm	5 mm	EPDM	20 m	20 m
225-1503.00-00000	15 mm	3 mm	EPDM	20 m	20 m
225-1504.00-00000	15 mm	4 mm	EPDM	20 m	20 m
225-1505.00-00000	15 mm	5 mm	EPDM	20 m	20 m
225-2003.00-00000	20 mm	3 mm	EPDM	20 m	20 m
225-2004.00-00000	20 mm	4 mm	EPDM	20 m	20 m
225-2005.00-00000	20 mm	5 mm	EPDM	20 m	20 m
226-1003.00-00000	10 mm	3 mm	CR	20 m	20 m
226-1004.00-00000	10 mm	4 mm	CR	20 m	20 m
226-1005.00-00000	10 mm	5 mm	CR	20 m	20 m
226-1503.00-00000	15 mm	3 mm	CR	20 m	20 m
226-1504.00-00000	15 mm	4 mm	CR	20 m	20 m
226-1505.00-00000	15 mm	5 mm	CR	20 m	20 m
226-2003.00-00000	20 mm	3 mm	CR	20 m	20 m
226-2004.00-00000	20 mm	4 mm	CR	20 m	20 m
226-2005.00-00000	20 mm	5 mm	CR	20 m	20 m

5-120

◂ all product details on DIRAK.com

Rectangular Seals EPDM / CR

RoHS WEEE

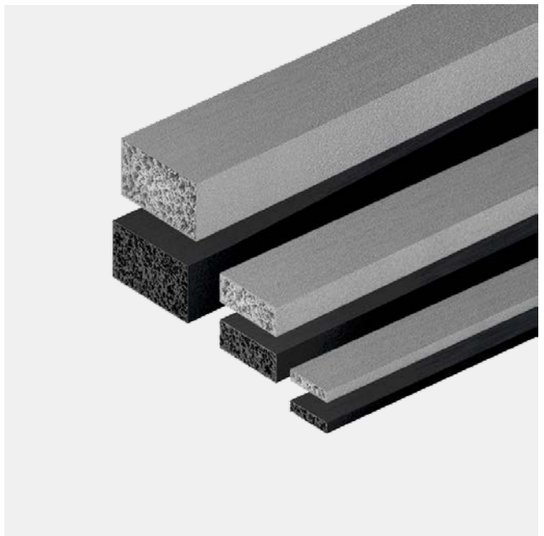

Advantages

- EPDM seals (black and light grey) are tested according to the UL standards UL 157 and UL 50E.
- Density: CR 0.55±0.05g/cm³, EPDM 0.6±0.1g/cm³.
- Profile without Glue: 268- CR black, 272- EPDM black, 270- EPDM light grey.
- Profile with self-adhesive on one side. They are non-stretching: 269- CR black, 273- EPDM black, 271- EPDM light grey.
- Profile with permanent fixing with Acrylic Foam Tape: 277- CR black, 274- EPDM black, 275- EPDM light grey.

Materials

- **Rectangular seals:** EPDM or CR
- The shelf life for **seals with glue** is approx. 6 months.
- The self-adhesive seals are available within 3 weeks.

Remarks

Packaging:

the rectangular seals are delivered in the specified packaging units.

Note Tolerances!

ATTENTION: the glue on the self-adhesive seal is only an assembling aid.

1. self-adhesive

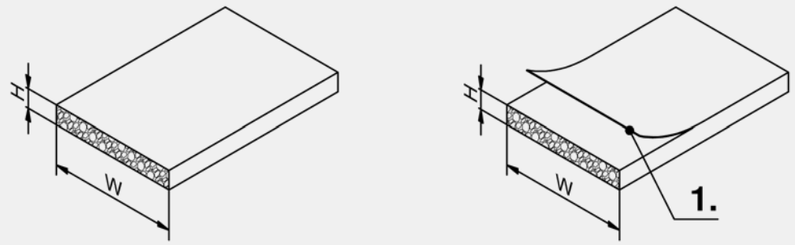

Examples for rectangular seals

Part Number	Width W	Height H	Collar length	Delivery Unit
268-0802.00-00000	8 mm	2 mm	100 m	100 m
268-1002.00-00000	10 mm	2 mm	100 m	100 m
268-1502.00-00000	15 mm	2 mm	100 m	100 m
268-1003.00-00000	10 mm	3 mm	100 m	100 m
268-1503.00-00000	15 mm	3 mm	100 m	100 m
268-1803.00-00000	18 mm	3 mm	100 m	100 m
268-2003.00-00000	20 mm	3 mm	100 m	100 m
268-3003.00-00000	30 mm	3 mm	50 m	50 m
268-0804.00-00000	8 mm	4 mm	100 m	100 m
268-1004.00-00000	10 mm	4 mm	100 m	100 m
268-1204.00-00000	12 mm	4 mm	100 m	100 m
268-1504.00-00000	15 mm	4 mm	100 m	100 m
268-2004.00-00000	20 mm	4 mm	100 m	100 m
268-3004.00-00000	30 mm	4 mm	50 m	50 m
268-0505.00-00000	5 mm	5 mm	100 m	100 m
268-1005.00-00000	10 mm	5 mm	100 m	100 m
268-1505.00-00000	15 mm	5 mm	50 m	50 m
268-2005.00-00000	20 mm	5 mm	50 m	50 m
268-2505.00-00000	25 mm	5 mm	50 m	50 m
268-3005.00-00000	30 mm	5 mm	50 m	50 m
268-4005.00-00000	40 mm	5 mm	50 m	50 m
268-5005.00-00000	50 mm	5 mm	25 m	25 m
268-0606.00-00000	6 mm	6 mm	100 m	100 m

The sealing profiles listed here are just a few examples of over 500 rectangular seals from our program. For other cross-sections or questions about dimensions, delivery time or delivery units, please contact us. We will be glad to help you.

all product details ▸ on DIRAK.com

5-125

Round Profiles EPDM / CR

[5-127]

RoHS WEEE

Advantages

- Round profiles EPDM or CR with a closed surface.
- **EPDM profiles are tested according to UL 157 and UL 50 E.**

Materials

- **Round profiles**: EPDM or CR
- **Storeability: 6 months**

Remarks

Note Tolerances!

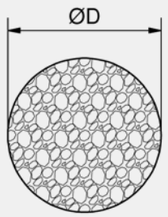

Round profiles, EPDM, light grey

Part Number	Diameter Ø	Collar length	Delivery Unit
270-0020.00-00000	2.0 mm	200 m	200 m
270-0025.00-00000	2.5 mm	200 m	200 m
270-0030.00-00000	3.0 mm	200 m	200 m
270-0035.00-00000	3.5 mm	200 m	200 m
270-0040.00-00000	4.0 mm	200 m	200 m
270-0045.00-00000	4.5 mm	200 m	200 m
270-0050.00-00000	5.0 mm	200 m	200 m
270-0060.00-00000	6.0 mm	200 m	200 m
270-0070.00-00000	7.0 mm	200 m	200 m
270-0080.00-00000	8.0 mm	200 m	200 m
270-0090.00-00000	9.0 mm	200 m	200 m
270-0100.00-00000	10 mm	200 m	100 m
270-0110.00-00000	11 mm	200 m	100 m
270-0120.00-00000	12 mm	200 m	100 m
270-0130.00-00000	13 mm	50 m	50 m
270-0140.00-00000	14 mm	50 m	50 m
270-0150.00-00000	15 mm	50 m	50 m
270-0160.00-00000	16 mm	50 m	50 m
270-0180.00-00000	18 mm	25 m	25 m
270-0200.00-00000	20 mm	25 m	25 m
270-0220.00-00000	22 mm	25 m	25 m
270-0250.00-00000	25 mm	25 m	25 m
270-0300.00-00000	30 mm	20 m	20 m
270-0350.00-00000	35 mm	20 m	20 m
270-0400.00-00000	40 mm	20 m	20 m
270-0450.00-00000	45 mm	10 m	10 m
270-0500.00-00000	50 mm	10 m	10 m

5-127

all product details on DIRAK.com

Round profiles, EPDM, black

Part Number	Diameter Ø	Collar length	Delivery Unit
272-0020.00-00000	2.0 mm	200 m	200 m
272-0025.00-00000	2.5 mm	200 m	200 m
272-0030.00-00000	3.0 mm	200 m	200 m
272-0035.00-00000	3.5 mm	200 m	200 m
272-0040.00-00000	4.0 mm	200 m	200 m
272-0045.00-00000	4.5 mm	200 m	200 m
272-0050.00-00000	5.0 mm	200 m	200 m
272-0060.00-00000	6.0 mm	200 m	200 m
272-0070.00-00000	7.0 mm	200 m	200 m
272-0080.00-00000	8.0 mm	200 m	200 m
272-0090.00-00000	9.0 mm	200 m	200 m
272-0100.00-00000	10 mm	100 m	100 m
272-0110.00-00000	11 mm	100 m	100 m
272-0120.00-00000	12 mm	100 m	100 m
272-0130.00-00000	13 mm	50 m	100 m
272-0140.00-00000	14 mm	50 m	50 m
272-0150.00-00000	15 mm	50 m	50 m
272-0160.00-00000	16 mm	50 m	50 m
272-0180.00-00000	18 mm	25 m	25 m
272-0200.00-00000	20 mm	25 m	25 m
272-0220.00-00000	22 mm	25 m	25 m
272-0250.00-00000	25 mm	25 m	25 m
272-0300.00-00000	30 mm	20 m	20 m
272-0400.00-00000	40 mm	20 m	20 m
272-0450.00-00000	45 mm	10 m	20 m
272-0500.00-00000	50 mm	10 m	10 m

Round profiles, CR, black

Part Number	Diameter Ø	Collar length	Delivery Unit
268-0020.00-00000	2.0 mm	200 m	200 m
268-0030.00-00000	3.0 mm	200 m	200 m
268-0040.00-00000	4.0 mm	200 m	200 m
268-0050.00-00000	5.0 mm	200 m	200 m
268-0060.00-00000	6.0 mm	200 m	200 m
268-0070.00-00000	7.0 mm	200 m	200 m
268-0080.00-00000	8.0 mm	200 m	200 m
268-0100.00-00000	10 mm	100 m	100 m
268-0120.00-00000	12 mm	100 m	100 m
268-0150.00-00000	15 mm	50 m	50 m
268-0160.00-00000	16 mm	50 m	50 m
268-0180.00-00000	18 mm	25 m	25 m
268-0200.00-00000	20 mm	25 m	25 m
268-0220.00-00000	22 mm	25 m	25 m
268-0250.00-00000	25 mm	25 m	25 m
268-0300.00-00000	30 mm	20 m	20 m
268-0350.00-00000	35 mm	20 m	20 m

Window Seals EPDM

[5-130]

Advantages

- Window seals are used to mount panes, windows, etc. in doors, casings and machine enclosures.
- Assembly only **with** filler. The pane is clamped in place with the help of the filler and held centered in the cutout.
- The window seals are made of EPDM with excellent weathering and ozone resistance properties.
- DIRAK's EPDM quality is neutral to paints.
- **Tested according to UL 157 and UL 50 E.**

Materials

- **Window seals:** EPDM, black

Remarks

1. window
2. window seal
3. filler
4. sheet metal thickness

Please dimension window with 1mm gap around edges.

AS = size of window

AB = size sheet metal

The bending radius refers to the inside of the glass holder.

Note Tolerances!

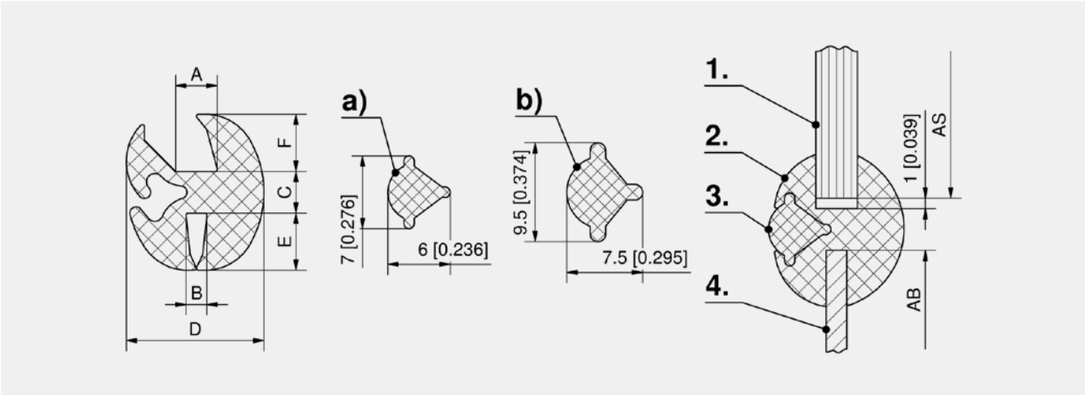

Window seals, EPDM

Part Number	A	B	C	D	e	f	Bending radius	Filler	Collar length	Delivery Unit
209-0501.00-00000	4 mm	2 mm	4 mm	13 mm	5.5 mm	5.5 mm	30	a)	20 m	20 m
209-0502.00-00000	4 mm	2.5 mm	7 mm	16 mm	7 mm	7 mm	70	b)	20 m	20 m
209-0503.00-00000	6 mm	2.5 mm	7 mm	18 mm	7 mm	7 mm	70	b)	20 m	20 m
209-0508.00-00000	3 mm	1 mm	4 mm	11.6 mm	4.5 mm	6 mm	35	a)	20 m	20 m
209-0509.00-00000	4 mm	1.5 mm	7 mm	16 mm	7 mm	7 mm	80	b)	20 m	20 m
209-0510.00-00000	4 mm	2 mm	7.3 mm	18 mm	11 mm	8.7 mm	100	b)	15 m	15 m
209-0511.00-00000	4.5 mm	5 mm	7 mm	16 mm	7 mm	7 mm	80	b)	20 m	20 m
209-0512.00-00000	5 mm	2 mm	7.5 mm	19 mm	12.5 mm	9.5 mm	100	b)	15 m	15 m
209-0513.00-00000	5 mm	3 mm	7 mm	19 mm	8 mm	8 mm	90	b)	20 m	20 m
209-0514.00-00000	5 mm	3 mm	7.5 mm	19 mm	12.5 mm	9.5 mm	100	b)	15 m	15 m
209-0515.00-00000	5 mm	5 mm	7 mm	18.4 mm	9 mm	8 mm	90	b)	20 m	20 m
209-0516.00-00000	5.5 mm	2 mm	7.3 mm	19 mm	11 mm	8.7 mm	100	b)	15 m	15 m
209-0517.00-00000	6 mm	1.5 mm	7.5 mm	19 mm	12.5 mm	9.5 mm	100	b)	15 m	15 m
209-0518.00-00000	6 mm	2.5 mm	7 mm	19 mm	8 mm	8 mm	90	b)	20 m	20 m
209-0519.00-00000	6 mm	3 mm	7.5 mm	19 mm	12.5 mm	9.5 mm	100	b)	15 m	15 m
209-0520.00-00000	6 mm	4 mm	7.5 mm	19 mm	12.5 mm	9.5 mm	100	b)	15 m	15 m
209-0521.00-00000	6 mm	6 mm	8.5 mm	19 mm	9.5 mm	9 mm	100	b)	15 m	15 m
209-0522.00-00000	8 mm	3 mm	7.5 mm	22 mm	12.5 mm	9.5 mm	120	b)	15 m	15 m
209-0523.00-00000	8 mm	4 mm	8.5 mm	25 mm	12.5 mm	10 mm	100	b)	15 m	15 m
209-0524.00-00000	10 mm	3 mm	7.5 mm	23 mm	12.5 mm	9.5 mm	120	b)	15 m	15 m
209-0525.00-00000	10 mm	6 mm	7.5 mm	24 mm	12.5 mm	9.5 mm	100	b)	15 m	15 m

Accessories

684 209-1003.00-00000 **Fitting tool for window seals, incl. eye 701-7068**
684 701-7066.00-00000 **Eye for fitting tool, small**

Specific accessories

a) 209-0601.00-00000 **Filler**
b) 209-0602.00-00000 **Filler**

5-130
◂ all product details on DIRAK.com

Window Seal EPDM

[5-131]

Advantages

- Window seals are used to mount panes, windows, etc. in doors, casings and machine enclosures.
- Assemly only **with** filler. The pane is clamped in place with the help of the filler and held centered in the cutout.
- The window seal is made of EPDM with excellent weathering and ozone resistance properties.
- DIRAK's EPDM quality is neutral to paints.
- **Tested according to UL 157 and UL 50 E.**

Materials

- **Window seals:** EPDM, black

Remarks

1. window
2. profile
3. filler
4. sheet metal thickness

Please dimension window with 1mm gap around edges.

AS = size of window

AB = size sheet metal

The bending radius refers to the inside of the glass holder.

Note Tolerances!

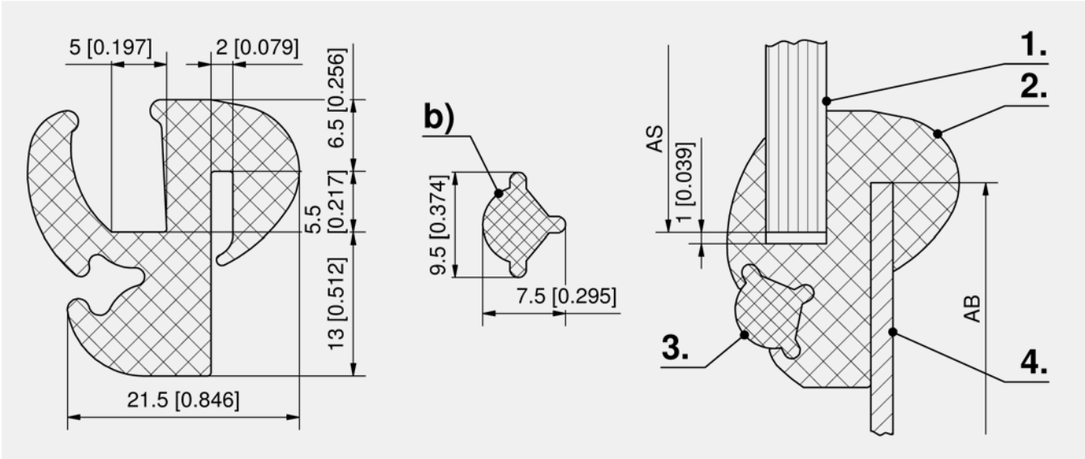

Window seal, EPDM

Part Number	Width W	Height H	Bending radius	Collar length	Delivery Unit
209-0504.00-00000	21.5 mm	25 mm	100	15 m	15 m

Accessories

684 209-1003.00-00000 **Fitting tool for window seals, incl. eye 701-7068**
684 701-7066.00-00000 **Eye for fitting tool, small**

Specific accessories

b) 209-0602.00-00000 **Filler**

all product details ▸ on DIRAK.com
5-131

Window Seals EPDM / NBR

[5-140]

Advantages

- Window seals are used to mount panes, windows, etc. in doors, casings and machine enclosures.
- They are made of EPDM / NBR. The pane is mounted by simply pressing it into the window seal.
- Additional tools are not required. The pane is inside or outside the enclosure and hence is well-suited for use under high pressure or vacuum conditions.
- **EPDM seals are tested according to UL 157 and UL 50E.**

Materials

- **Rubber quality:** EPDM or Perbunan (NBR), NBR is oil-resistant

Remarks

Please dimension window with 1,5 mm gap around edges.

All standard window seals are available from stock.

Note Tolerances!

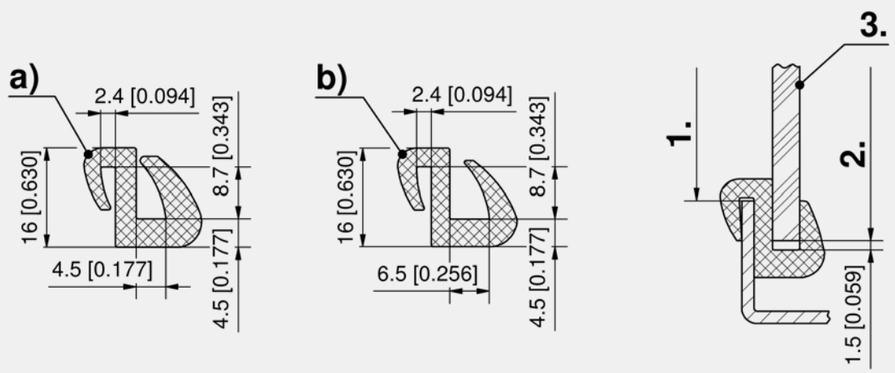

Window seals

	Part Number	Height H	Sheet thickness	Glass thickness	Bending radius	Material	Collar length	Delivery Unit
a)	209-0401.00-00000	16 mm	2.4 mm	4.5 mm	min 80	EPDM	100 m	100 m
b)	209-0402.00-00000	16 mm	2.4 mm	6.5 mm	min 80	EPDM	20 m	100 m
a)	209-0406.00-00000	16 mm	2.4 mm	4.5 mm	min 80	NBR	50 m	100 m
b)	209-0407.00-00000	16 mm	2.4 mm	6.5 mm	min 80	NBR	50 m	100 m

5-140
◂ all product details on DIRAK.com

Clip-on EMC/RFI Sealing Profiles

[5-149]

Advantages

- The EMC/RFI shielding profiles are electromagnetically compatible profiles product system 5-150 and 5-151.
- These sealing profiles additionally have a form closed clotted Cu/Sn fleece.
- The proven properties are retained. Technical data see 5-150/5-151.
- Clip-on sealing profile.
- **Version a), b) and c) tested according to UL 157 and UL 50E.**

Materials

- **Carrier:** EPDM, black
- **Fleece:** Cu/Sn coated

Remarks

1. Cu/Sn coated fleece
2. outside lip (water- and dust sealing)
3. door/frame with lacquer

Note Tolerances!

Data sheets available upon request.

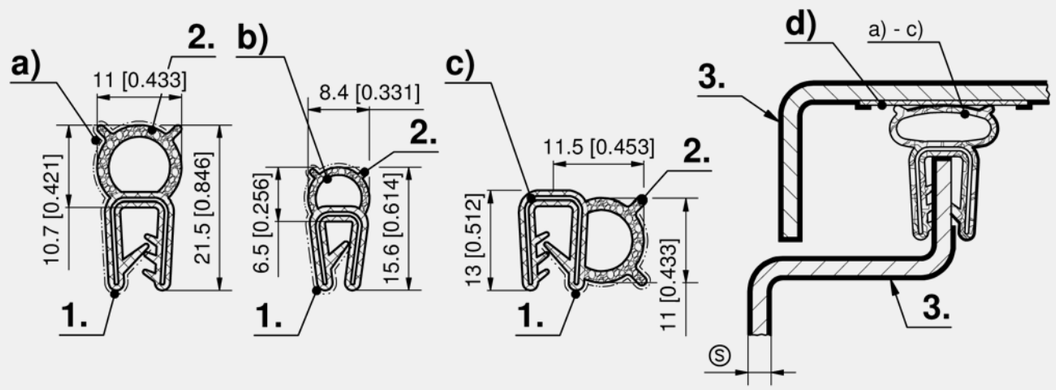

EMC/RFI sealing profiles

	Part Number	Width W	Height H	Clamping range (S)	Collar length	Delivery Unit
a)	209-1301.00-L2006	11 mm	21.5 mm	1.0 - 3.0 mm	25 m	100 m
c)	209-1302.00-L2006	11.5 mm	13 mm	2.0 mm	25 m	100 m
b)	209-1305.00-00000	8.4 mm	15.6 mm	1.0 - 2.0 mm	25 m	100 m

Contact tape for EMC/RFI

	Part Number	Width W	Mask	Collar length	Delivery Unit
d)	209-1331.00-00012	12 mm	9 mm	99 m	99 m
d)	209-1331.00-00022	22 mm	19 mm	99 m	99 m
d)	209-1331.00-00025	25 mm	21 mm	99 m	99 m

all product details ▸ on DIRAK.com
5-149

Clip-on Sealing Profiles EPDM / NBR

RoHS WEEE

Advantages

- The sealing part of these profiles is made of EPDM sponge rubber and the clamp area consists of soft rubber with a wire carrier.
- In an extrusion process the two materials are bonded to each other through vulcanization.
- **EPDM profiles are tested according to UL 157 and UL 50E.**
- The profiles made of NBR are oil resistant.

Materials

- **Clip-on profiles:** EPDM or NBR, black
- **Carrier:** Soft rubber
- **Sealing part:** Sponge rubber

Remarks

Note Tolerances!

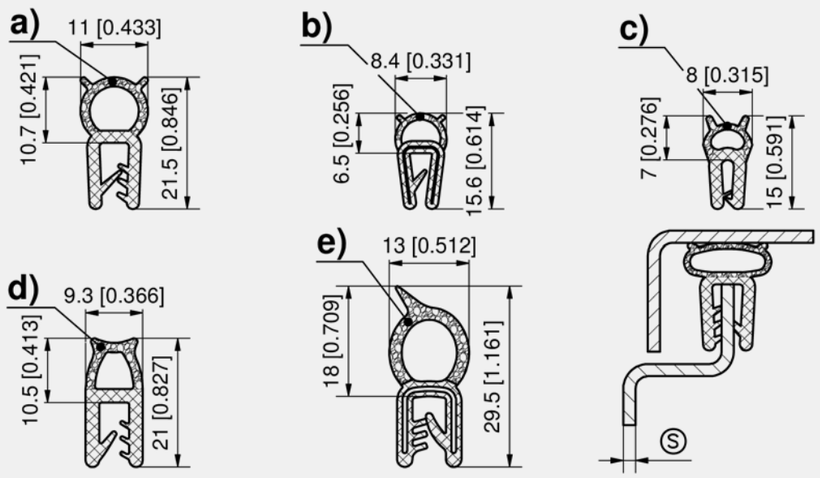

Clip-on sealing profiles

	Part Number	Width W	Height H	Clamping range (S)	Material	Collar length	Delivery Unit
a)	209-0201.00-00000	11 mm	21.5 mm	1.5 - 3.0 mm	EPDM	50 m	50 m
a)	209-0201.1A-00000	11 mm	21.5 mm	0.8 - 2.0 mm	EPDM	50 m	50 m
a)	209-2201.00-00000	11 mm	21.5 mm	1.5 - 3.0 mm	NBR	50 m	50 m
a)	209-0240.00-00000	11 mm	21.5 mm	3.0 - 4.0 mm	EPDM	50 m	50 m
b)	209-0205.00-00000	8.4 mm	15.6 mm	1.0 - 2.0 mm	EPDM	50 m	50 m
b)	209-0246.00-00000	8.4 mm	15.6 mm	1.0 - 2.0 mm	NBR	50 m	50 m
c)	209-0205.1A-00000	8 mm	15 mm	0.8 - 1.5 mm	EPDM	50 m	50 m
d)	209-0211.00-00000	9.3 mm	21 mm	1.0 - 2.5 mm	EPDM	50 m	50 m
e)	209-0220.00-00000	13 mm	29.5 mm	1.0 - 2.5 mm	EPDM	50 m	50 m

5-150
all product details on DIRAK.com

Clip-on Sealing Profiles EPDM / NBR

RoHS WEEE

Advantages

- The sealing part of these profiles is made of EPDM sponge rubber and the clamp area consists of soft rubber with a wire carrier.
- In an extrusion process the two materials are bonded to each other through vulcanization.
- **EPDM profiles are tested according to UL 157 and UL 50 E.**
- The profiles made of NBR are oil resistant.

Materials

- **Clip-on profiles:** EPDM or NBR, black
- **Carrier:** Soft rubber
- **Sealing part:** Sponge rubber

Remarks

Note Tolerances!

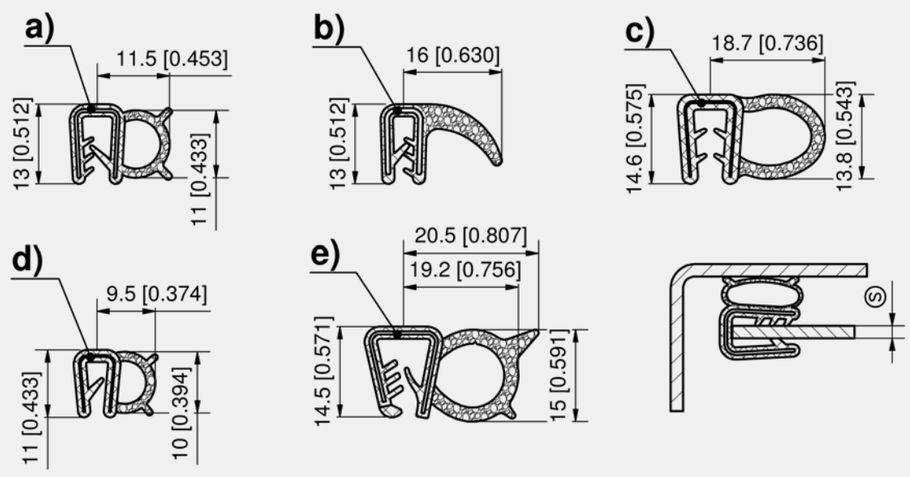

Clip-on sealing profiles

	Part Number	Width W	Height H	Clamping range (S)	Material	Collar length	Delivery Unit
a)	209-0202.00-00000	11.5 mm	13 mm	1.5 - 3.0 mm	EPDM	50 m	50 m
a)	209-0202.1A-00000	11.5 mm	13 mm	0.8 - 2.0 mm	EPDM	50 m	50 m
a)	209-2202.00-00000	11.5 mm	13 mm	1.5 - 3.0 mm	NBR	50 m	50 m
b)	209-0203.00-00000	16 mm	13 mm	1.5 - 3.0 mm	EPDM	50 m	50 m
c)	209-0204.00-00000	18.7 mm	14.6 mm	1.5 - 3.0 mm	EPDM	25 m	25 m
d)	209-0206.00-00000	9.5 mm	11 mm	1.0 - 2.0 mm	EPDM	50 m	50 m
d)	209-0206.1A-00000	9.5 mm	11 mm	0.8 - 1.5 mm	EPDM	50 m	50 m
e)	209-0228.00-00000	20.5 mm	15 mm	1.0 - 2.5 mm	EPDM	75 m	75 m
e)	209-0229.00-00000	20.5 mm	15 mm	2.0 - 4.0 mm	EPDM	75 m	75 m
e)	209-0230.00-00000	20.5 mm	15 mm	4.0 - 6.0 mm	EPDM	75 m	75 m

+	Accessories
	685 5-171 **Radius Adapter**

all product details on DIRAK.com
5-151

Clip-on Sealing Profiles EPDM

[5-152]

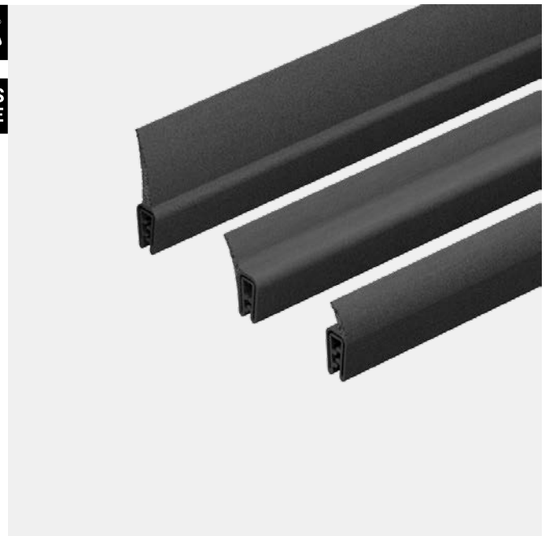

Advantages

- These sealing profiles are made of EPDM. The sealing lip is made of soft rubber and the clamping area consists of soft rubber with a wire carrier.
- **Tested according to UL 157 and UL 50E.**

Materials

- **Clip-on profile:** EPDM soft rubber, black

Remarks

Note Tolerances!

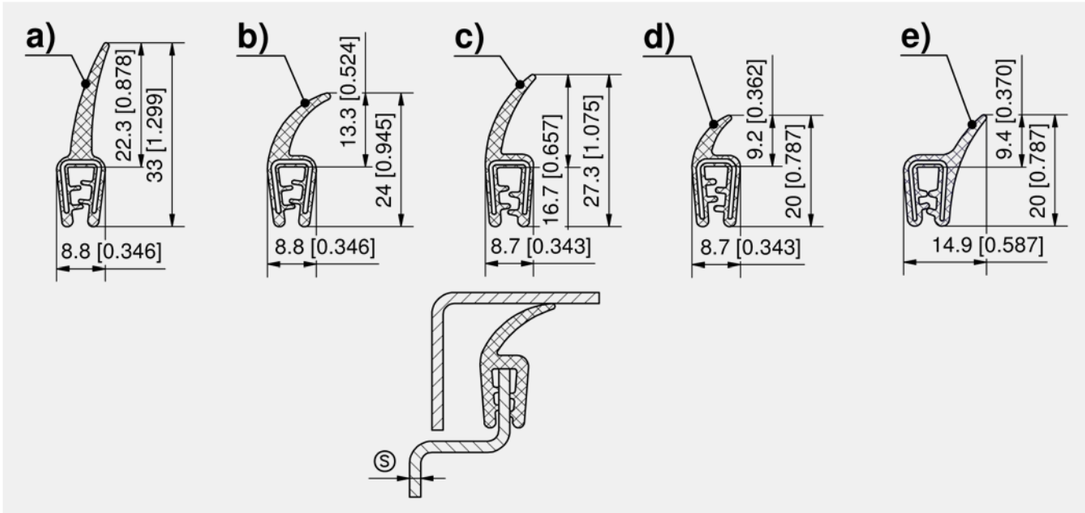

Clip-on sealing profiles EPDM

	Part Number	Width W	Height H	Clamping range (S)	Collar length	Delivery Unit
a)	209-0219.00-00000	8.8 mm	33 mm	1.0 - 2.5 mm	50 m	50 m
b)	209-0221.00-00000	8.8 mm	24 mm	1.0 - 2.5 mm	50 m	50 m
c)	209-0237.00-00000	8.7 mm	27.3 mm	1.0 - 3.0 mm	50 m	50 m
d)	209-0239.00-00000	8.7 mm	20 mm	1.0 - 2.0 mm	50 m	50 m
e)	209-0275.00-00000	14.9 mm	20 mm	1.0 - 3.0 mm	50 m	50 m

5-152
◂ all product details on DIRAK.com

Clip-on Sealing Profiles PVC / EPDM

[5-153]

Advantages

- Combination profiles consist of PVC with closed cell sponge rubber profiles.
- These sponge rubber profiles are made of high-quality synthetic rubber and are characterized by a high age resistance and great elasticity.
- **EPDM profiles are tested according to UL 157 and UL 50 E.**

Materials

- **Sealing part:** Sponge rubber, EPDM, black
- **Carrier:** PVC

Remarks

Sealing profiles as a combination between PVC edge trim and sponge rubber can have up to two glued joints.

Note Tolerances!

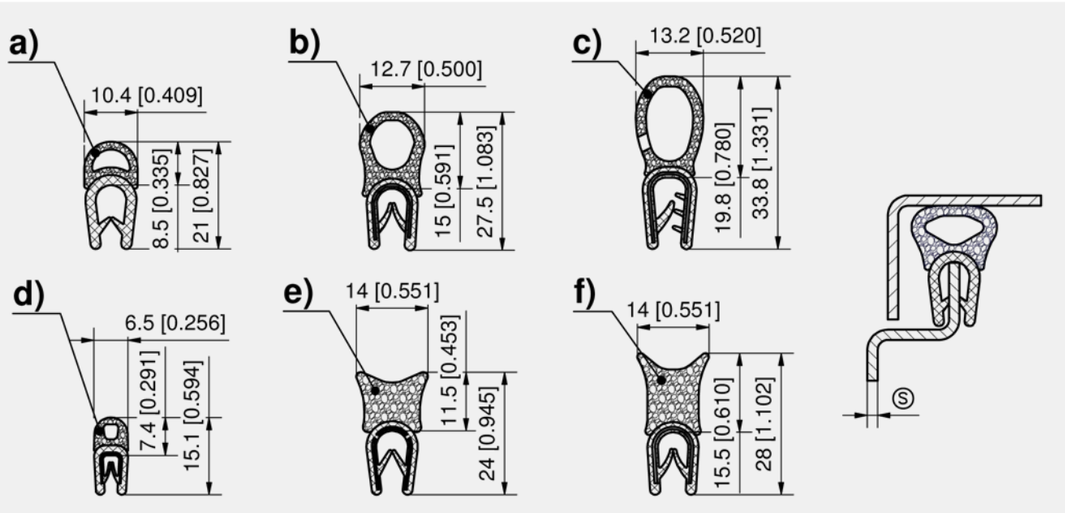

Clip-on sealing profiles

	Part Number	Width W	Height H	Clamping range (S)	Collar length	Delivery Unit
a)	209-0213.00-00000	10.4 mm	21 mm	1.0 - 4.0 mm	50 m	50 m
b)	209-0215.00-00000	12.7 mm	27.5 mm	1.0 - 4.0 mm	50 m	50 m
c)	209-0216.00-00000	13.2 mm	33.8 mm	2.0 - 4.0 mm	50 m	50 m
d)	209-0222.00-00000	6.5 mm	15.1 mm	1.0 - 2.0 mm	100 m	100 m
e)	209-0227.00-00000	14 mm	24 mm	1.0 - 4.0 mm	50 m	50 m
f)	209-0238.00-00000	14 mm	28 mm	1.0 - 4.0 mm	50 m	50 m

all product details ▸ on DIRAK.com
5-153

Clip-on Sealing Profiles PVC / EPDM

[5-154]

Advantages

- Combination profiles consist of PVC with closed cell sponge rubber profiles.
- These sponge rubber profiles are made of high-quality synthetic rubber and are characterized by a high age resistance and great elasticity.
- **EPDM profiles are tested according to UL 157 and UL 50 E.**

Materials

- **Sealing part:** Sponge rubber, EPDM, black
- **Carrier:** PVC

Remarks

Sealing profiles as a combination between PVC edge trim and sponge rubber can have up to two glued joints.

Note Tolerances!

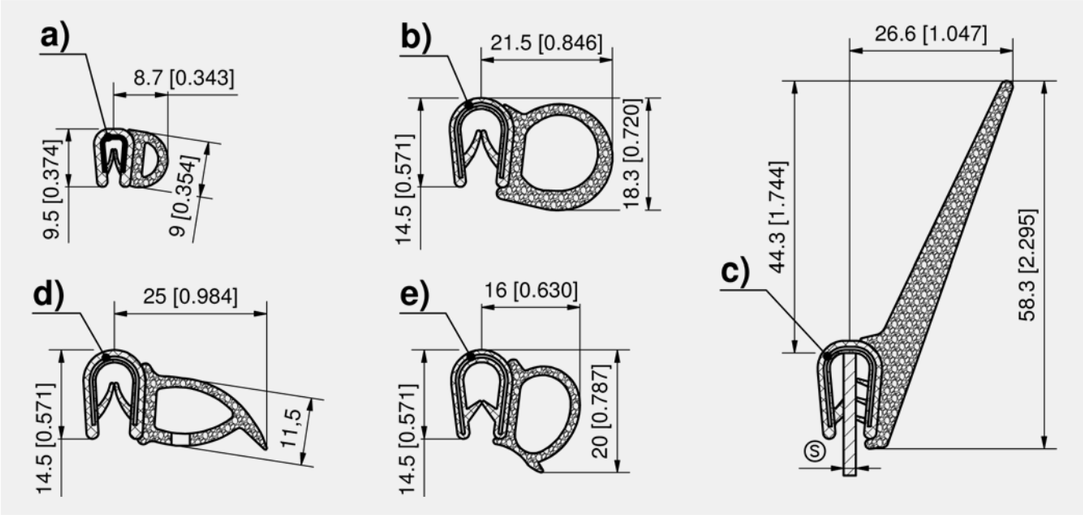

Clip-on sealing profiles

	Part Number	Width W	Height H	Clamping range (S)	Collar length	Delivery Unit
a)	209-0212.00-00000	8.7 mm	9.5 mm	1.0 - 2.0 mm	100 m	100 m
b)	209-0214.00-00000	21.5 mm	18.3 mm	1.0 - 4.0 mm	50 m	50 m
c)	209-0217.00-00000	26.6 mm	58.3 mm	2.0 - 4.0 mm	25 m	25 m
d)	209-0218.00-00000	25 mm	14.5 mm	1.0 - 4.0 mm	50 m	50 m
e)	209-0226.00-00000	16 mm	20 mm	1.0 - 4.0 mm	50 m	50 m

+	Accessories
685	5-171 **Radius Adapter**

5-154
◂ all product details on DIRAK.com

Special Profiles EPDM

[5-155]

Advantages

- Special sealing profiles made of EPDM for application according to the shown examples.
- **Tested according to UL 157 and UL 50E.**

Materials

- **Special profiles:** EPDM

Remarks

Note Tolerances!

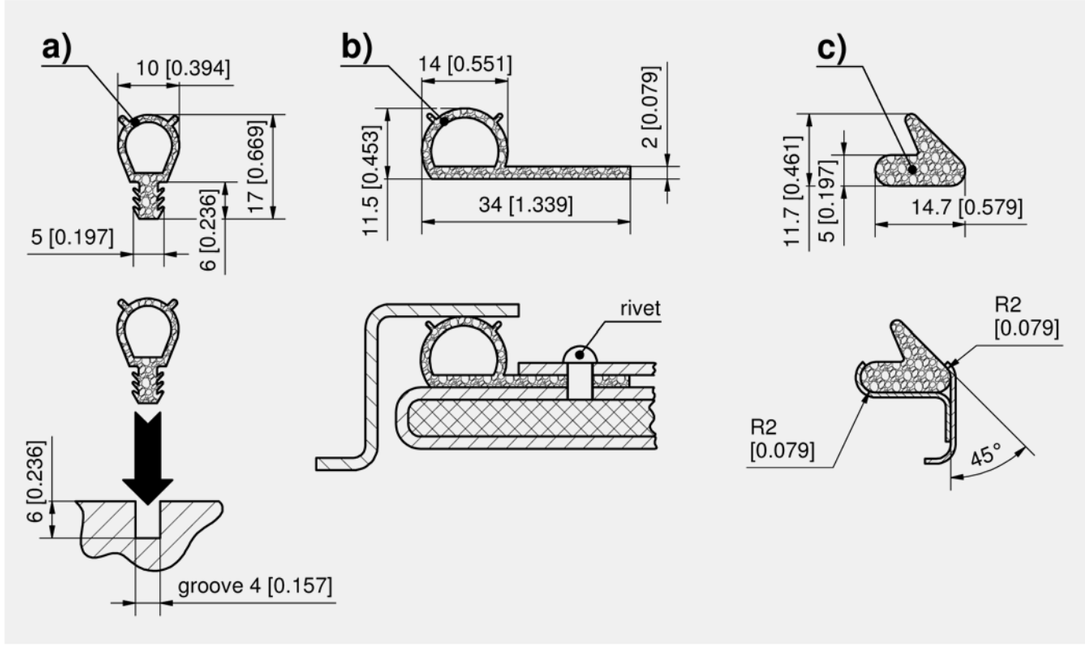

Special profiles EPDM

	Part Number	Width W	Height H	Shore A	Collar length	Delivery Unit
a)	209-0704.00-00000	10 mm	17 mm		100 m	100 m
b)	209-1203.00-00000	34 mm	11.5 mm	55 °	50 m	50 m
c)	241-0903.00-00000	14.7 mm	11.7 mm	15 °	50 m	50 m

all product details ▸ on DIRAK.com
5-155

Channel Sealing Profiles PVC

[5-110.02]

RoHS WEEE

Advantages

- Conventional door profiles made of PVC for applications into seal channels.
- Several versions for different door bendings available.

Materials

- **Sealing Profile:** PVC, black - soft
- Hardness: 57+/-5 Shore A

Remarks

Note Tolerances!

For higher requirements regarding sealing properties and easy fitting please see product system 5-100.

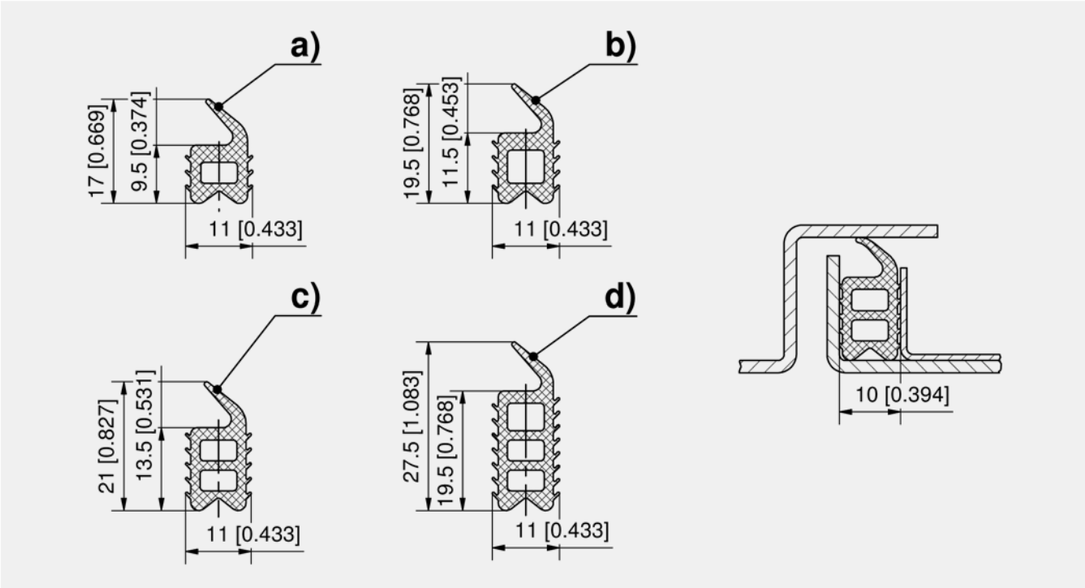

Channel sealing profiles

	Part Number	Width W	Height H	Collar length	Delivery Unit
a)	209-0903.00-00000	11 mm	17 mm	20 m	20 m
b)	209-0902.00-00000	11 mm	19.5 mm	20 m	20 m
c)	209-0901.00-00000	11 mm	21.5 mm	20 m	20 m
d)	209-0904.00-00000	11 mm	27.5 mm	20 m	20 m

5-110.02

◂ all product details on DIRAK.com

Profile for Double Doors EPDM

[5-156]

Advantages

- Seal for double doors.
- **Tested according to UL 157 and UL 50 E.**

Materials

- **Profile:** EPDM, black

Remarks

(S) 1.2 - 2mm

1. angle depends on panel thickness. Standard ~30°

2. foamed sealing

Packaging unit: 10 pcs. of 50mm.

Note Tolerances!

RoHS WEEE

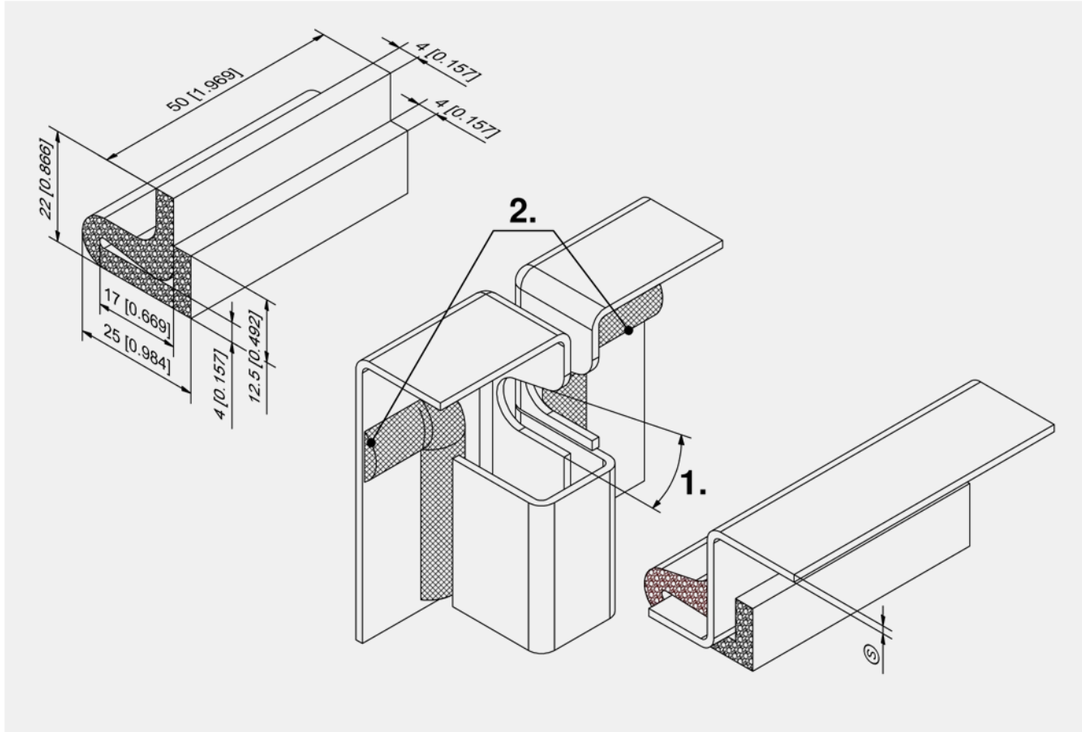

Profile for double doors

Part Number	Width W	Height H	Shore A	Delivery Unit
209-1204.00-00050	25 mm	22 mm	15 °	10 pcs.

all product details ▸ on DIRAK.com

5-156

Edge Protections PVC

[5-160]

RoHS WEEE

Advantages

- Edge protections are used when steel edges have to be smooth.
- Additional metal machining work can be avoided and an decorative effect is achieved.
- The U-shaped steel clip-on tape with a PVC jacketing provide for firm seating on metal edges, even if there are radii or bends.
- The PVC coating is weather-proof as well as temperature resistant within approx. -40° to +70°C.

Materials

- **Edge protection**: PVC with steel spring core

Remarks

Note Tolerances!

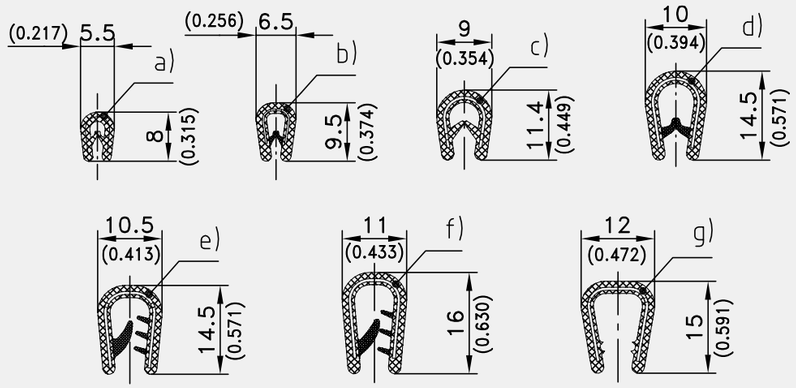

Edge protections, PVC

	Part Number	Width W	Height H	Clamping range (S)	Colour	Collar length	Delivery Unit
a)	209-0801.00-00000	5.5 mm	8 mm	0.8 - 1.5 mm	black, smooth	50 m	50 m
b)	209-0802.00-00000	6.5 mm	9.5 mm	1.0 - 2.0 mm	black	50 m	50 m
b)	209-0805.00-00000	6.5 mm	9.5 mm	1.0 - 2.0 mm	white grey	100 m	100 m
b)	209-0807.00-00000	6.5 mm	9.5 mm	1.0 - 2.0 mm	silver	100 m	100 m
c)	209-0808.00-00000	9 mm	11.4 mm	1.0 - 2.0 mm	black	100 m	100 m
c)	209-0820.00-00000	9 mm	11.4 mm	2.0 - 4.0 mm	black	100 m	100 m
d)	209-0803.00-00000	10 mm	14.5 mm	1.0 - 4.0 mm	black	50 m	50 m
d)	209-0810.00-00000	10 mm	14.5 mm	1.0 - 4.0 mm	anthracite	100 m	100 m
d)	209-0811.00-00000	10 mm	14.5 mm	1.0 - 4.0 mm	light grey	100 m	100 m
d	209-0812.00-00000	10 mm	14.5 mm	1.0 - 4.0 mm	white grey	100 m	100 m
e)	209-0813.00-00000	10.5 mm	14.5 mm	2.0 - 5.0 mm	black	100 m	100 m
f)	209-0814.00-00000	11 mm	16 mm	2.0 - 4.0 mm	black	100 m	100 m
f)	209-0816.00-00000	11 mm	16 mm	1.0 - 2.5 mm	black	100 m	100 m
f)	209-0817.00-00000	11 mm	16 mm	4.0 - 6.0 mm	black	100 m	100 m
g)	209-0818.00-00000	12 mm	15 mm	8.0 - 10.0 mm	black	100 m	100 m
g)	209-0815.00-00000	12 mm	15 mm	6.0 - 8.0 mm	black	100 m	100 m
g)	209-0819.00-00000	12 mm	15 mm	6.0 - 8.0 mm	light grey	100 m	100 m

5-160

◂ all product details on DIRAK.com

Edge Protection EPDM

[5-161]

Advantages

- Edge protections are used when steel edges have to be smooth.
- Additional metal machining work can be avoided and an decorative effect is achieved.
- The U-shaped steel clip-on tape with an EPDM jacketing provides for firm seating on metal edges, even if there are radii or bends.
- **Tested according to UL 157 and UL 50E.**

Materials

- **Edge protection:** EPDM, black with steel spring core

Remarks

Note Tolerances!

RoHS WEEE

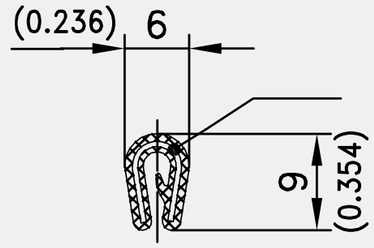

Edge protection, EPDM

Part Number	Width W	Height H	Clamping range (S)	Collar length	Delivery Unit
209-0824.00-00000	6 mm	9 mm	1.0 - 2.0 mm	100 m	100 m

all product details ▸ on DIRAK.com

5-161

Accessories for Profiles

[5-170]

Advantages

- Pair of scissors for cutting sealing profiles into length.
- Scissors feature built in protractor.
- Glue for EPDM for joining the sealing profiles to rings.

Remarks

Fitting tool for window seals PS 5-130 / 5-131.

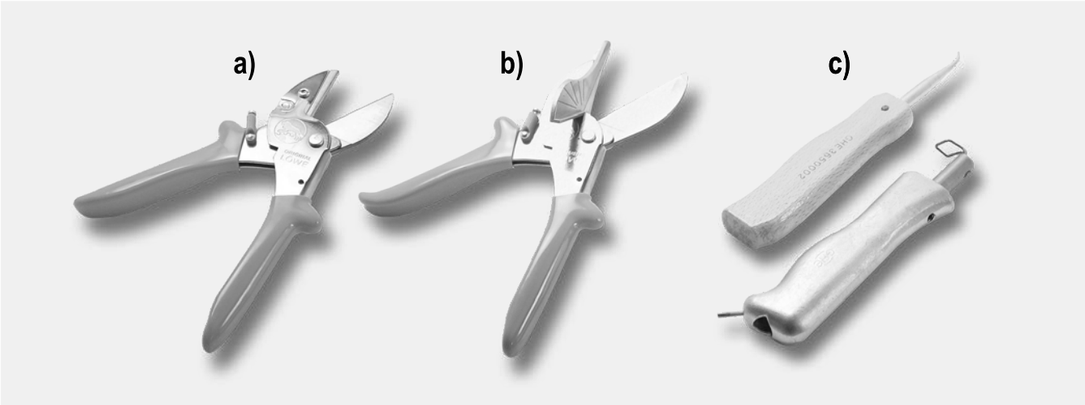

Accessories for profiles

	Part Number	Name	Eyelets width	Delivery Unit
a)	209-1001.00-00000	Pair of universal scissors		1 pc.
b)	209-1002.00-00000	Pair of mitring scissors		1 pc.
c)	209-1003.00-00000	Fitting tool for window seals, incl. eye 701-7068		1 pc.
	701-7066.00-00000	Eye for fitting tool, small	9.4 mm	1 pc.
	701-7067.00-00000	Eye for fitting tool, medium	10.6 mm	1 pc.
	701-7068.00-00000	Eye for fitting tool, large	14 mm	1 pc.
	209-7054.00-00000	Glue for EPDM, 50g		1 pc.

5-170
all product details on DIRAK.com

Radius Adapter

[5-171]

RoHS WEEE

Advantages

- Radius adapter simplifies installation for clip-on sealing profiles by creating a radius within 90° inside corners.
- The radius adapter is easily installed and kept in position at the flange of the housing by the clip-on U-part of the sealing profile.
- No welding and grinding of junction plates due to the corner radius.
- Just put the radius adapter into the corner (after the painting process) and fix with the U-shape carrier of the sealing profile.
- Housing covers can be screwed to the frame at low cost using the integrated device for a selftapping screw.

Materials

- **Radius adapter:** PA6 30GF, black

Remarks

1. installation surface

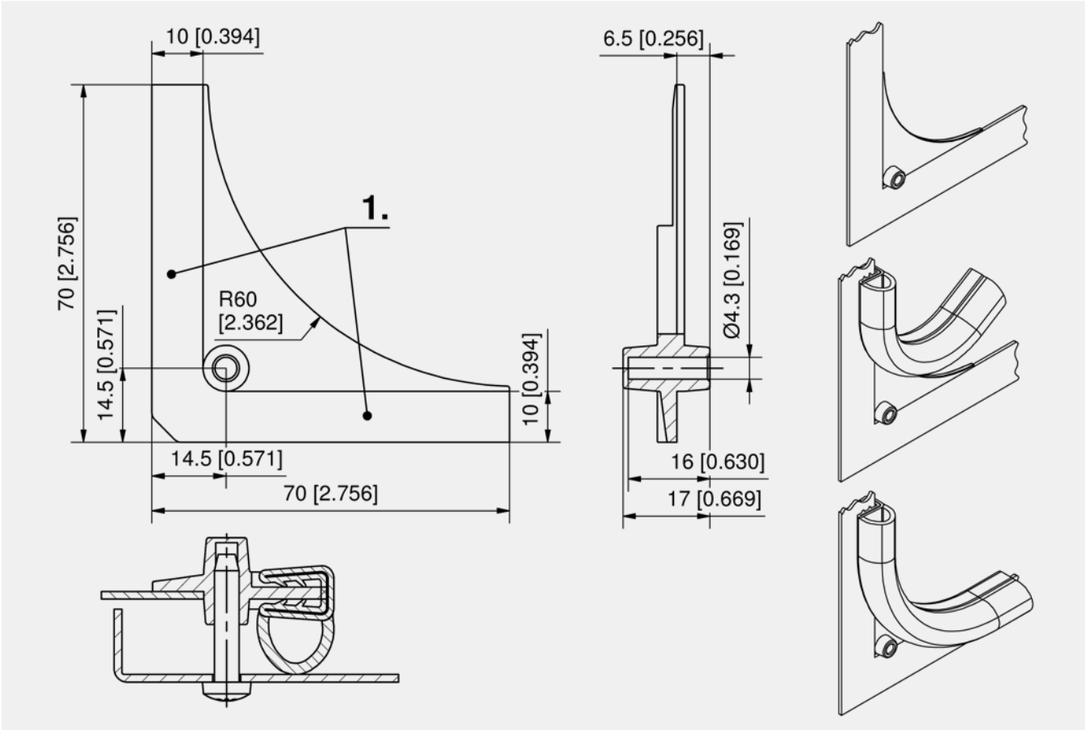

Accessories for profiles

Part Number	Type	Delivery Unit
209-4204.52-00000	Radius adapter for clip-on profiles	4 pcs.

all product details on DIRAK.com
5-171

Rubber Bumpers EPDM / NR

[5-950.01]

RoHS WEEE

Advantages

- Universal in use and made of rubber, they offer long service lives and an economical answer to many needs.
- Protection against damage to other components when opening and closing hinged hatch covers or doors.
- Used as rubber feet, they absorb vibration, too.
- Vigorous movements are damped.
- Scratches on the floor are prevented.

Materials

- **Rubber Bumpers:** EPDM 30% / NR 70%, black, Shore A 70-80°

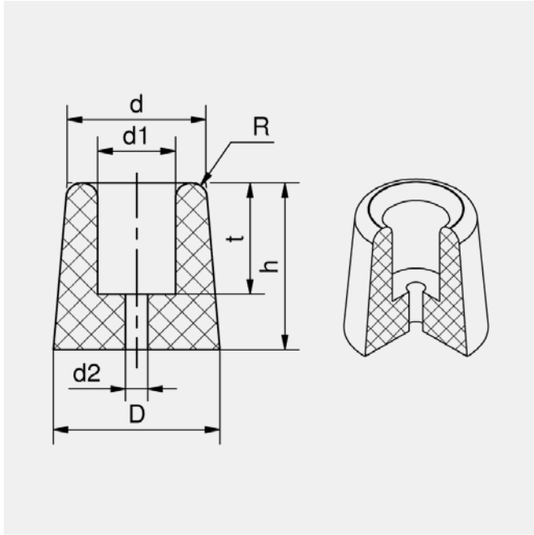

Rubber bumpers

Part Number	h	D	d	d1	d2	t	R	Delivery Unit
209-3001.00-00000	12 mm	20 mm	18 mm	10 mm	4 mm	7 mm	2 mm	10 pcs.
209-3002.00-00000	30 mm	30 mm	25 mm	14 mm	4 mm	20 mm	2.75 mm	10 pcs.
209-3003.00-00000	22.5 mm	20 mm	19 mm	10 mm	4 mm	8 mm	2 mm	10 pcs.
209-3004.00-00000	32 mm	40 mm	38 mm	13 mm	6 mm	12 mm	6 mm	10 pcs.

Mushroom Type Bumpers EPDM / NR

[5-950.02]

RoHS WEEE

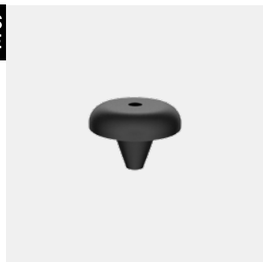

Advantages

- Universal in use and made of rubber.
- Long service lives and an economical answer to many needs.
- Protection against damage to other components when opening and closing hinged hatch covers or doors.
- Used as rubber feet, they absorb vibration, too.
- Vigorous movements are damped.
- Scratches on the floor are prevented.

Materials

- **Mushroom type bumpers:** EPDM 30% / NR 70%, black, Shore A 60°

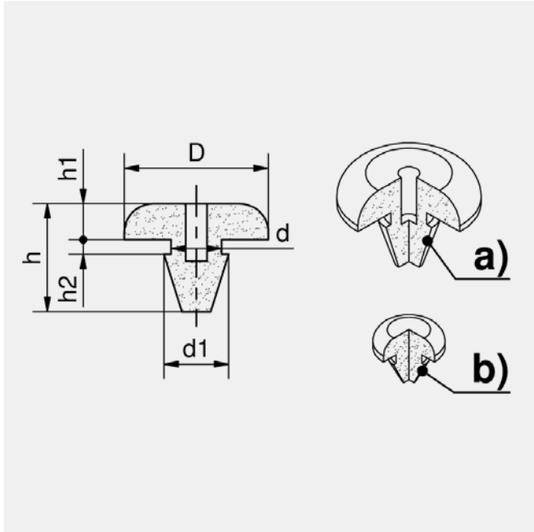

Mushroom type bumpers

	Part Number	D	d	d1	h	h1	h2	Delivery Unit
a)	209-3101.00-00000	20 mm	7 mm	9 mm	15 mm	5 mm	2 mm	10 pcs.
b)	209-3102.00-00000	10 mm	5 mm	6 mm	8.5 mm	3 mm	1.5 mm	10 pcs.

5-950.01 5-950.02

all product details on DIRAK.com

Clip-on EMC/RFI Sealing Profiles

See page 673

Handles

Page 717

With variable length and simply strong.

Extremely flexible thanks to different handles, even on longer lengths. Fast installation and a strong connection thanks to DST.

Page 711

DIRAK-SNAP-Technology.

Did you know? Most of our products are also available with DIRAK-SNAP-Technology (DST).

Unique. Variable. Attractive.

The DST quarter-turn with handle uniquely combines the locking function of a quarter-turn with the aesthetic design of a handle. DST ensures easy, reliable and secure installation.

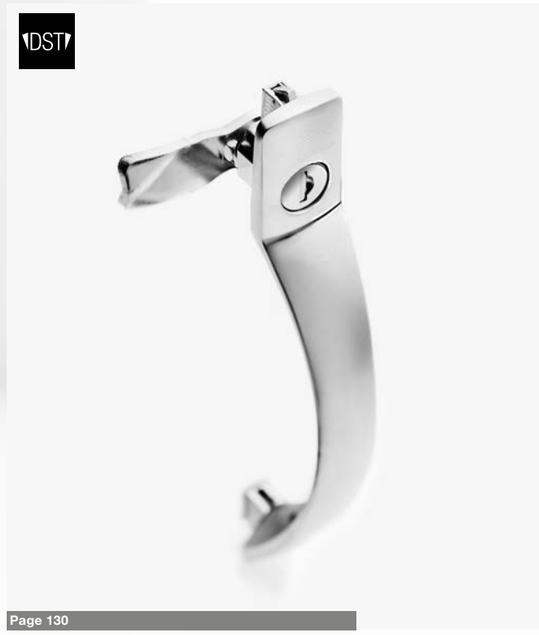

Page 130

Page 695

NEAT AND CLEAN.

Insensitive to dirt and easy to clean thanks to slanted surfaces and transition radii, the bow handle can be used both vertically and horizontally.

Stays on the bottom.

The flush mounted hinge recessed handle is especially suitable for installation in bottom flaps.

Page 713

Handles by Material

Polyamide

Page: **694–697, 709, 712, 714–718**

Aluminium

Page: **698–705**

Zinc die

Page: **706–711, 713, 719**

Polyamide/ Steel

Page: **716–718**

694 Bridge Handle PA [6-1000]

695 Bridge Handle PA [6-1000.01]

696 DST Bridge Handle [6-1001DST]

697 PA Bridge Handle [6-1031]

698 Bridge Handle [6-1102]

699 Bridge Handle [6-1103]

700 Bridge Handle [6-1104]

701 Bridge Handle [6-1105]

702 Bridge Handle [6-1106]

703 Finger Pull Handle [6-1107]

704 Bridge Handle [6-1108]

705 Finger Pull Handle [6-1109]

706 Bridge Handle [6-1131]

707 DST Bridge Handle [6-1171DST]

708 DST Bridge Handle OMICRON [6-1133DST]

709 DST Finger Pull Handle OMEGA [6-1200.01DST]

710 DST Finger Pull Handle OMICRON [6-1200.02DST]

711 DST Finger Pull Handle, folding [6-1300DST]

712 DST Revolving Pull Handle [6-1330DST]

713 Hinged Recessed Handle, flush mounted [6-1380]

714 Flush Pull Handle PA [6-1410]

715 DST Recessed Handle PA [6-1411DST]

716 Handle [6-1600.01]

717 DST Handle [6-1600DST]

718 Handle, bent [6-1600.02]

719 DST Grip Handles [6-1500DST]

Bridge Handle PA

[6-1000]

RoHS WEEE

Advantages

- For vertical or horizontal applications.
- Resistant to dirt and easy to clean due to sloping surfaces and transition radii.
- Corrosion-resistant.
- Screws are covered by plugs.
- Plugs clip into the handle toolless.

Materials

- **Bridge handle:** PA, black

Remarks

Fastening by cylinder head screws DIN 7984, cylinder head screws DIN EN ISO 4762, hex. head screws DIN 931 and / or countersunk screws DIN EN ISO 10642.

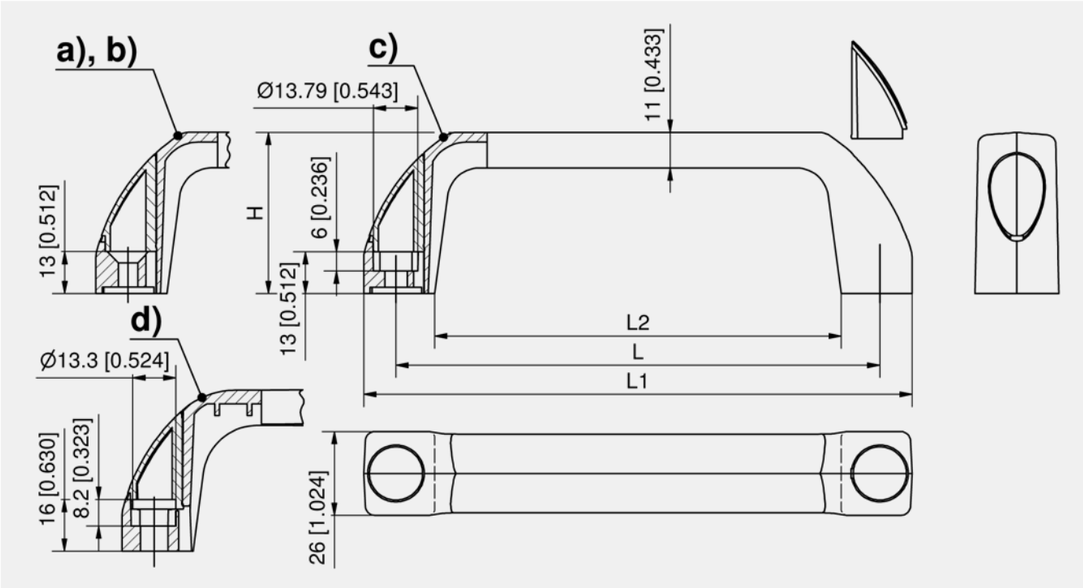

Polyamide handle complete, with 2 plugs

	Part Number	Fastening type	L	L1	L2	H	Installation type	Delivery Unit
a)	213-9207.00-00000	Countersunk screws M5	122 mm	142 mm	98 mm	41 mm	screw-on	10 pcs.
a)	213-9204.00-00000	Countersunk screws M5	122 mm	142 mm	98 mm	50 mm	screw-on	10 pcs.
a)	213-9202.00-00000	Countersunk screws M5	150 mm	170 mm	126 mm	50 mm	screw-on	10 pcs.
b)	213-9205.00-00000	Countersunk screws M6	122 mm	142 mm	98 mm	50 mm	screw-on	10 pcs.
c)	213-9206.00-00000	Cylinder head screws / hex. screws M6	122 mm	142 mm	98 mm	41 mm	screw-on	10 pcs.
c)	213-9203.00-00000	Cylinder head screws / hex. screws M6	122 mm	142 mm	98 mm	50 mm	screw-on	10 pcs.
c)	213-9201.00-00000	Cylinder head screws / hex. screws M6	150 mm	170 mm	126 mm	50 mm	screw-on	10 pcs.
d)	350-2040.00-00000	Cylinder head screws M8	179 mm	199 mm	155 mm	50 mm	screw-on	10 pcs.

+	Accessories
755	6-041 **Countersunk Screws and Hexagon Nuts**

6-1000

◂ all product details on DIRAK.com

Bridge Handle PA

[6-1000.01]

RoHS WEEE

Advantages

- For vertical or horizontal applications.
- Resistant to dirt and easy to clean due to sloping surfaces and transition radii.
- Corrosion-resistant.
- Screws are covered by plugs.
- Plugs clip into the handle toolless.

Materials

Handle and plugs: PA, grey (RAL 7001) or black, matt

Remarks

Fastening with M8 cylinder head screws DIN 7984.

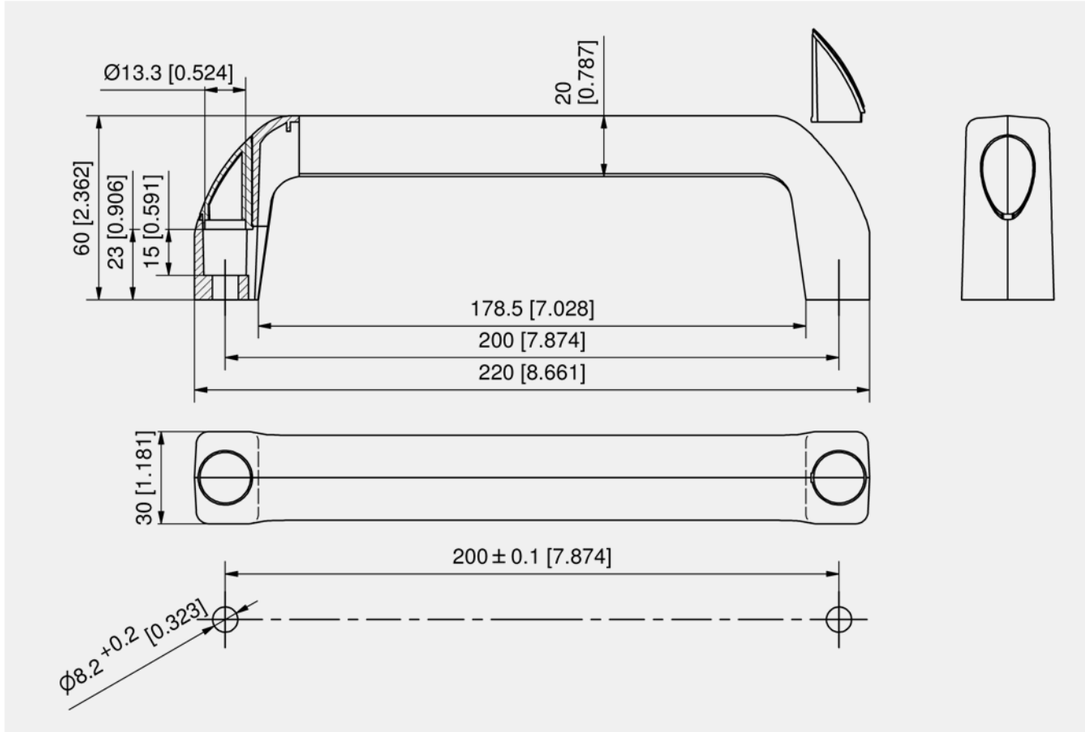

Polyamide handle complete, with 2 plugs

Part Number	Surface	L	L1	L2	H	Installation type	Delivery Unit
352-2151.03-00000	grey RAL 7001	200 mm	220 mm	178.5 mm	60 mm	screw-on	10 pcs.
352-2151.03-00001	black	200 mm	220 mm	178.5 mm	60 mm	screw-on	10 pcs.

all product details ▸ on DIRAK.com

6-1000.01

DST Bridge Handle

[6-1001DST]

DST

DIN 61373

RoHS WEEE

Advantages

- Bridge handle with DIRAK-SNAP-Technology, two sizes.
- Tool-less installation.
- The appealing design guarantees a firm and reliable grab.
- The closed surface makes it resistant to dirt and easy to clean.
- Lowest inside radius 5mm.
- For vertical or horizontal applications.
- Vibration-proof according to DIN EN 61373.

Materials

- **Bridge handle and cap:** PA, black
- **Snap wedges:** sintered steel

Remarks

Handle for variable lengths in the same design see product system 6-1600DST.

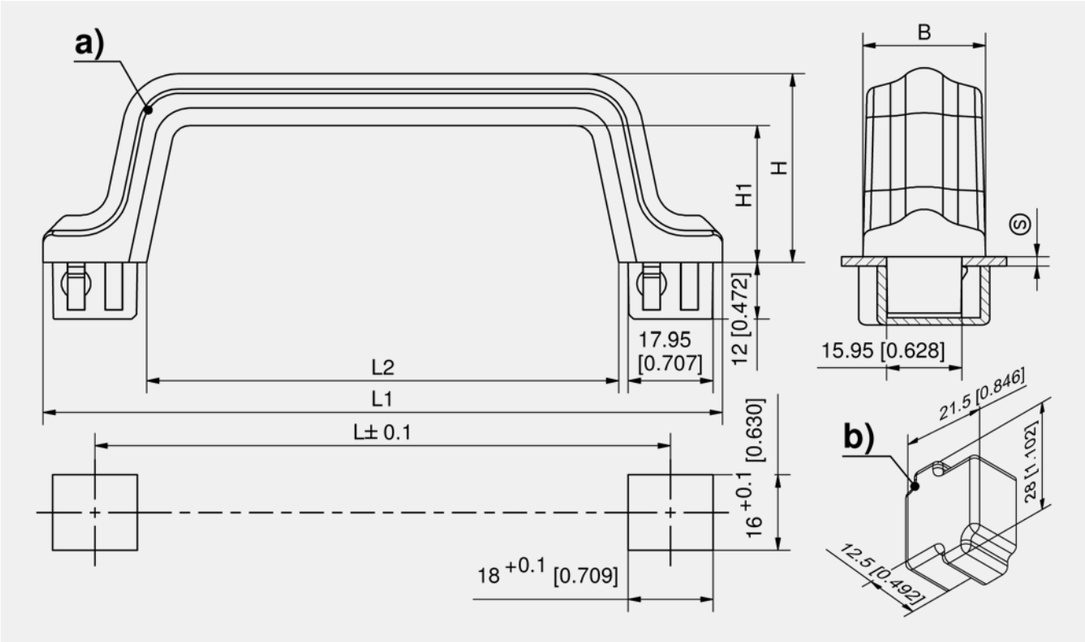

Polyamide handle

	Part Number	Clamping range (S)	L	L1	L2	H	H1	B	Installation type	Delivery Unit
a)	413-9003.00-00015	0.8 - 1.5 mm	122 mm	144 mm	100 mm	40 mm	29 mm	26 mm	tool-less	10 pcs.
a)	413-9003.00-00020	1.3 - 2.0 mm	122 mm	144 mm	100 mm	40 mm	29 mm	26 mm	tool-less	10 pcs.
a)	413-9003.00-00027	2.0 - 2.7 mm	122 mm	144 mm	100 mm	40 mm	29 mm	26 mm	tool-less	10 pcs.
a)	413-9004.00-00015	0.8 - 1.5 mm	150 mm	172 mm	128 mm	50 mm	39 mm	28 mm	tool-less	10 pcs.
a)	413-9004.00-00020	1.3 - 2.0 mm	150 mm	172 mm	128 mm	50 mm	39 mm	28 mm	tool-less	10 pcs.
a)	413-9004.00-00027	2.0 - 2.7 mm	150 mm	172 mm	128 mm	50 mm	39 mm	28 mm	tool-less	10 pcs.

Accessories Polyamide handle

	Part Number	Type	Installation type	Delivery Unit
b)	413-0901.54-00000	Cap	tool-less	10 pcs.

6-1001DST

◂ all product details on DIRAK.com

PA Bridge Handle

[6-1031]

RoHS WEEE

Advantages

- Bridge handle, two sizes.
- For vertical or horizontal applications.

Materials

- **Bridge handle:** PA, black

Remarks

a) fastening with cap screws DIN 7984, cap screws DIN ISO 4762, hexagon head screws DIN 931 SW10.

b) fastening with countersunk head screws DIN EN ISO 10642.

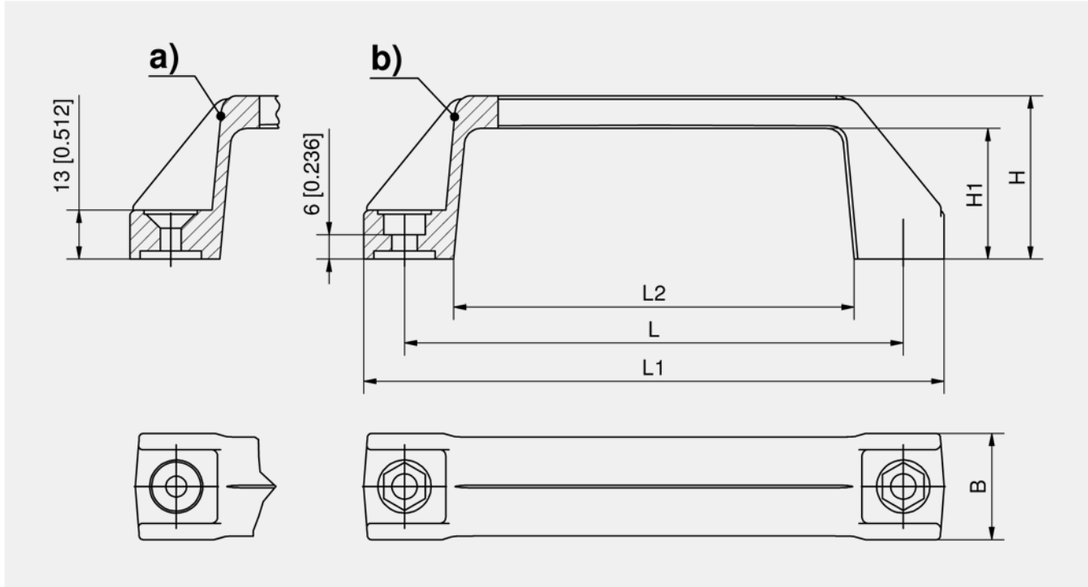

Bridge handle

	Part Number	Fastening type	L	L1	L2	H	H1	B	Installation type	Delivery Unit
a)	213-0202.03-00000	Countersunk screws M5	122 mm	142 mm	98 mm	40 mm	32 mm	26 mm	screw-on	10 pcs.
b)	213-0201.03-00000	Hexagon screws M6	122 mm	142 mm	98 mm	40 mm	32 mm	26 mm	screw-on	10 pcs.
a)	213-0204.03-00000	Countersunk screws M5	150 mm	170 mm	120 mm	52 mm	42 mm	28 mm	screw-on	10 pcs.
b)	213-0203.03-00000	Hexagon screws M6	150 mm	170 mm	120 mm	52 mm	42 mm	28 mm	screw-on	10 pcs.

+	Accessories
755	6-041 **Countersunk Screws and Hexagon Nuts**

all product details ▸ on DIRAK.com

6-1031

Bridge Handle

[6-1102]

RoHS WEEE

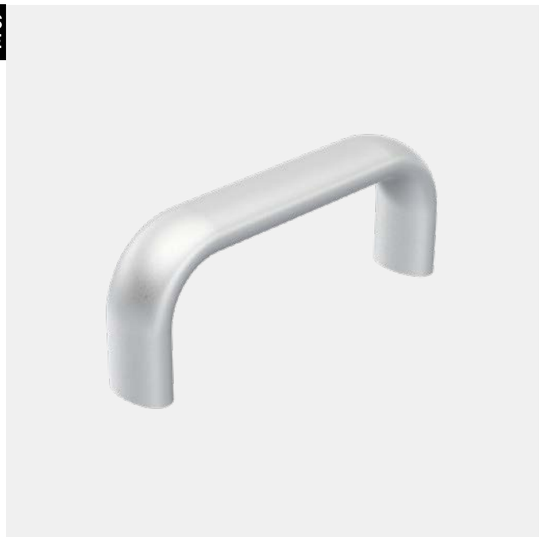

Advantages

- Solid aluminum handle, modern industrial design.
- Handles for hospital equipment, medical and food processing technology.
- For vertical or horizontal applications.

Materials

- **Bridge handle:** aluminum, anodized natural (silver)
- **Other surfaces on request.**

Remarks

For screws M8.

Additional lengths on request.

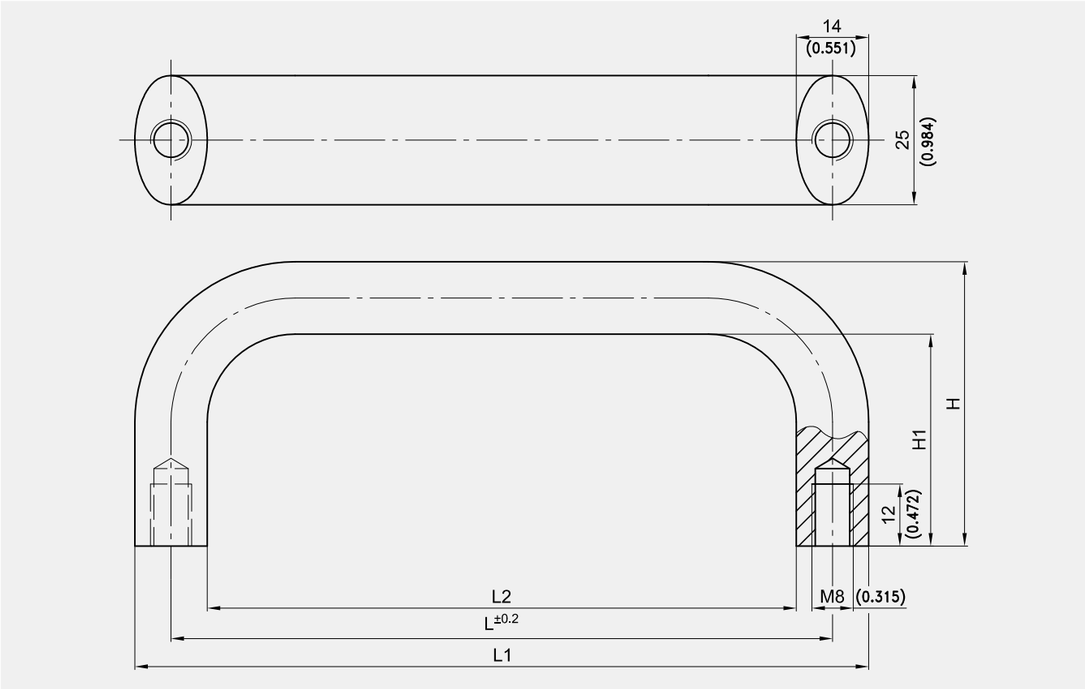

Bridge handle, ellipse

Part Number	L	L1	L2	H	H1	Installation type	Delivery Unit
213-0514.96-00112	112 mm	126 mm	98 mm	55 mm	41 mm	screw-on	10 pcs.
213-0514.96-00128	128 mm	142 mm	114 mm	55 mm	41 mm	screw-on	10 pcs.
213-0514.96-00160	160 mm	174 mm	146 mm	55 mm	41 mm	screw-on	10 pcs.

6-1102

◂ all product details on DIRAK.com

Bridge Handle

[6-1103]

RoHS WEEE

Advantages

- Solid aluminum handle, modern industrial design.
- Handles for hospital equipment, medical and food processing technology.
- For vertical or horizontal applications.

Materials

- **Bridge handle:** aluminum, anodized natural (silver)
- **Other surfaces on request.**

Remarks

For screws M5.

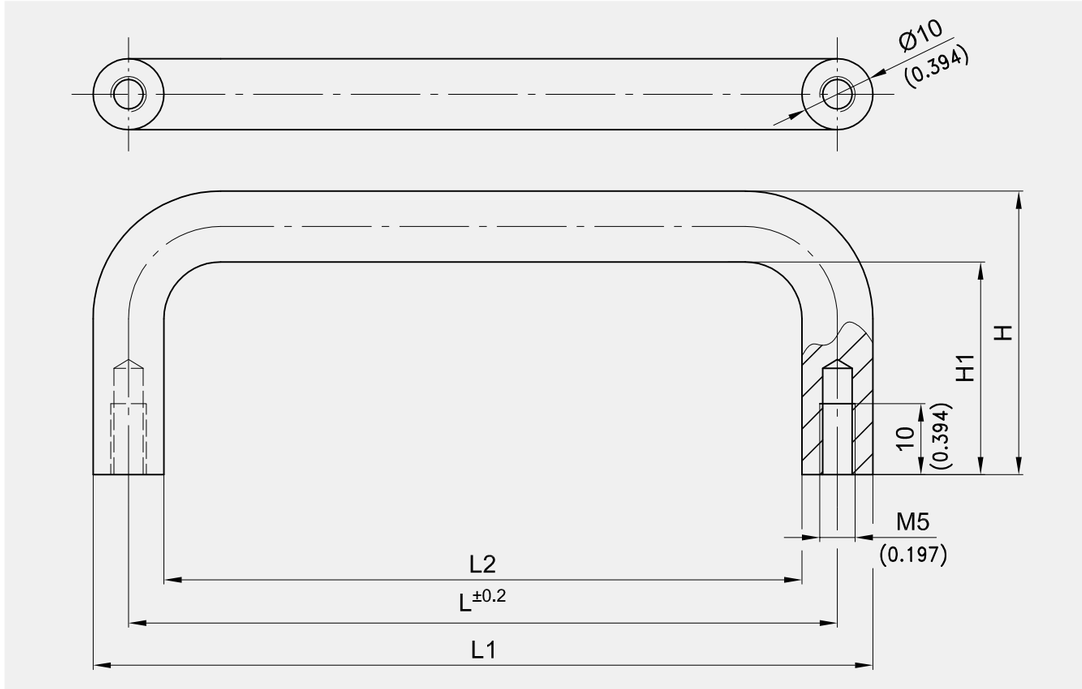

Bridge handle, round

Part Number	L	L1	L2	H	H1	Installation type	Delivery Unit
213-0517.96-00100	100 mm	110 mm	90 mm	40 mm	30 mm	screw-on	10 pcs.

all product details ▸ on DIRAK.com

6-1103

Bridge Handle

[6-1104]

RoHS WEEE

Advantages

- Solid aluminum handle, modern industrial design.
- Handles for machine building, tool building, electrical industry, hospital equipment, medical and food processing technology.
- For vertical or horizontal applications.

Materials

- **Bridge handle:** aluminum, anodized natural (silver)
- **Other surfaces on request.**

Remarks

For screws M6.

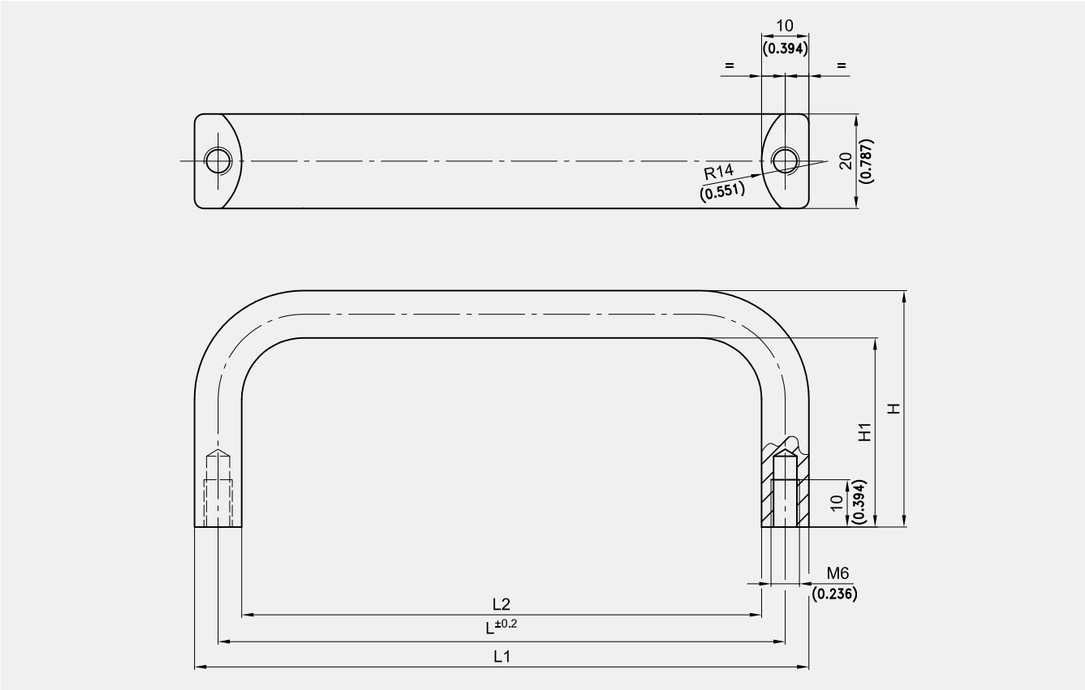

Bridge handle, half round

Part Number	L	L1	L2	H	H1	Installation type	Delivery Unit
213-0513.96-00112	112 mm	122 mm	102 mm	50 mm	40 mm	screw-on	10 pcs.
213-0513.96-00128	128 mm	138 mm	118 mm	50 mm	40 mm	screw-on	10 pcs.
213-0513.96-00160	160 mm	170 mm	150 mm	50 mm	40 mm	screw-on	10 pcs.

6-1104

all product details on DIRAK.com

Bridge Handle

[6-1105]

RoHS WEEE

Advantages

- Solid aluminum handle, modern industrial design.
- Handles for hospital equipment, medical and food processing technology.
- For vertical or horizontal applications.

Materials

- **Brigde handle:** aluminum, anodized natural (silver)
- **Other surfaces on request.**

Remarks

For screws M5.

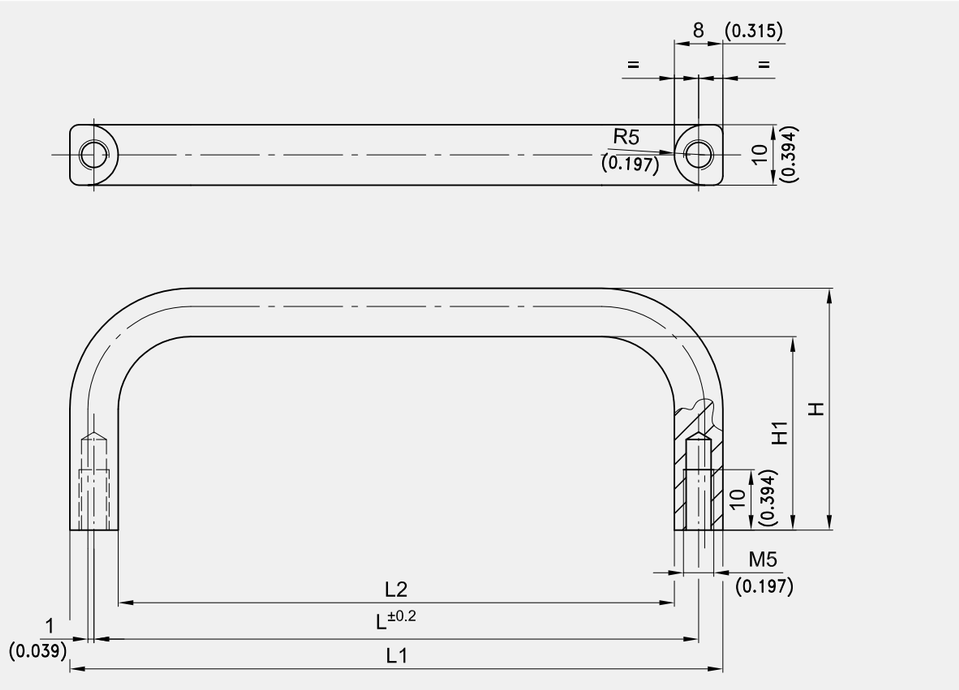

Bridge handle, half round

Part Number	L	L1	L2	H	H1	Installation type	Delivery Unit
213-0516.96-00100	100 mm	108 mm	92 mm	40 mm	32 mm	screw-on	10 pcs.

all product details on DIRAK.com

6-1105

Handles

Bridge Handle

[6-1106]

RoHS WEEE

Advantages

- Solid aluminum handle.
- The appealing kidney-shaped design makes it ergonomic and easy to use.
- Handles for machine building, tool building, electrical industry, hospital equipment, medical and food processing technology.
- For vertical or horizontal applications.

Materials

- **Bridge handle:** aluminum, anodized natural (silver)
- **Other surfaces on request.**

Remarks

For screws M8.

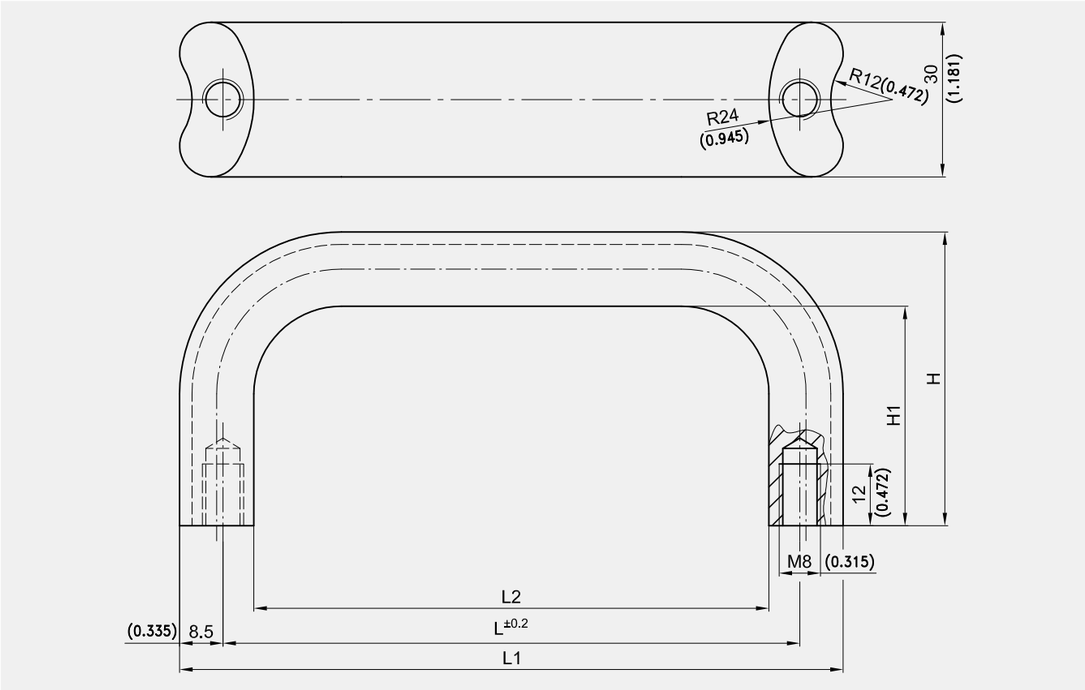

Bridge handle

Part Number	L	L1	L2	H	H1	Installation type	Delivery Unit
213-0515.96-00128	128 mm	145 mm	116 mm	57 mm	42.5 mm	screw-on	10 pcs.
213-0515.96-00160	160 mm	177 mm	148 mm	57 mm	42.5 mm	screw-on	10 pcs.
213-0515.96-00192	192 mm	209 mm	180 mm	57 mm	42.5 mm	screw-on	10 pcs.
213-0515.96-00350	350 mm	367 mm	338 mm	57 mm	42.5 mm	screw-on	10 pcs.
213-0515.96-00500	500 mm	517 mm	488 mm	57 mm	42.5 mm	screw-on	10 pcs.

6-1106
all product details on DIRAK.com

Finger Pull Handle

[6-1107]

RoHS WEEE

Advantages

- Solid aluminum handle, modern industrial design.
- This handle is suitable for the computer industry, 19" technology, enslosures, equipments and other applications.
- For vertical or horizontal applications.

Materials

- **Finger pull handle:** aluminum, anodized natural (silver)
- **Other surfaces on request.**

Remarks

Fastening with M4 screws.

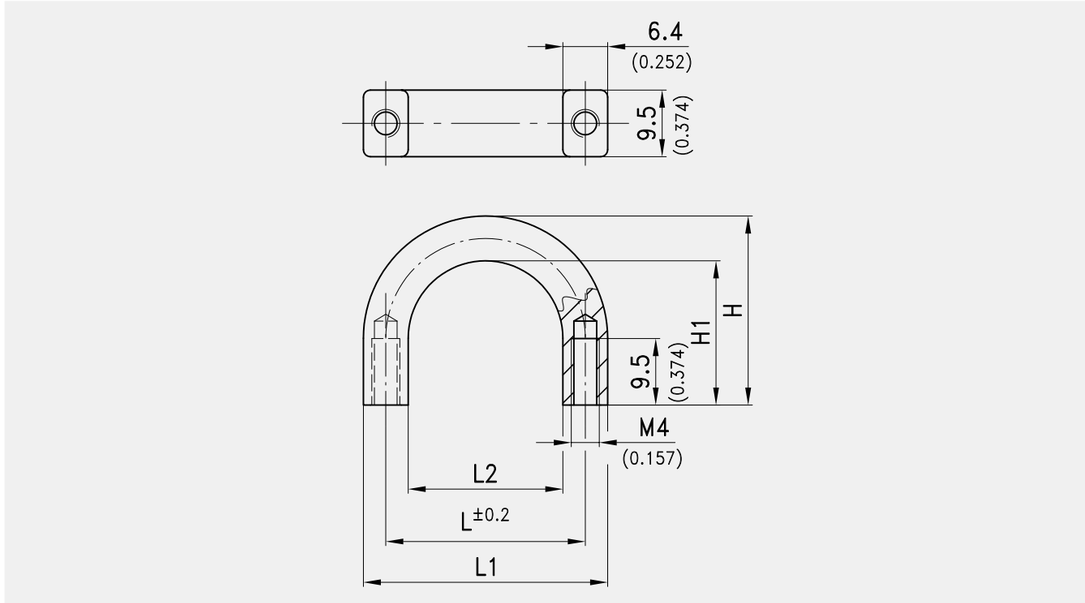

Finger pull handle

Part Number	L	L1	L2	H	H1	Installation type	Delivery Unit
213-0510.96-00285	28.5 mm	35 mm	22.2 mm	27 mm	20.5 mm	screw-on	10 pcs.

all product details on DIRAK.com
6-1107

Bridge Handle

[6-1108]

RoHS WEEE

Advantages

- Solid aluminum handle, modern industrial design.
- This handle is suitable for the computer industry, 19" technology, enclosures, equipments and other applications.
- For vertical or horizontal applications.

Materials

- **Bridge handle:** aluminum, anodized natural (silver)
- **Other surfaces on request.**

Remarks

Fastening with M4 screws.

Finger pull handle in same design see product system 6-1109.

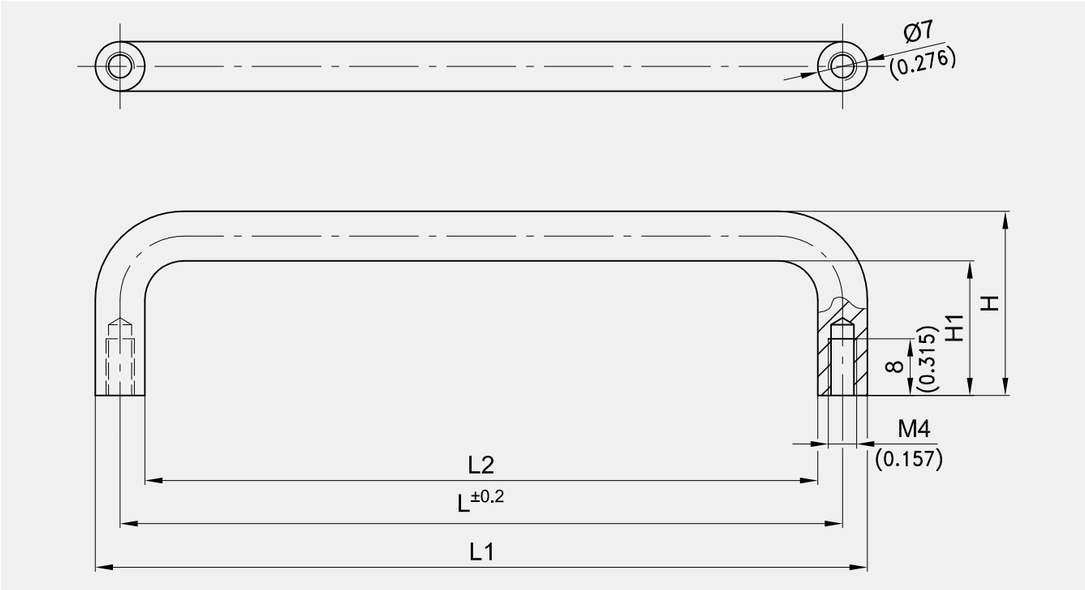

Bridge handle

Part Number	L	L1	L2	H	H1	Installation type	Delivery Unit
213-0512.96-00096	96 mm	103 mm	89 mm	26 mm	19 mm	screw-on	10 pcs.
213-0512.96-00128	128 mm	135 mm	121 mm	26 mm	19 mm	screw-on	10 pcs.

6-1108

all product details on DIRAK.com

Finger Pull Handle

[6-1109]

RoHS WEEE

Advantages

- Solid aluminum handle, modern industrial design.
- This handle is suitable for the computer industry, 19" technology, enclosures, equipments and other applications.
- For vertical or horizontal applications.

Materials

- **Finger pull handle:** aluminum, anodized natural (silver)
- **Other surfaces on request.**

Remarks

Fastening with M4 screws.

Bridge handle in same design see product system 6-1108.

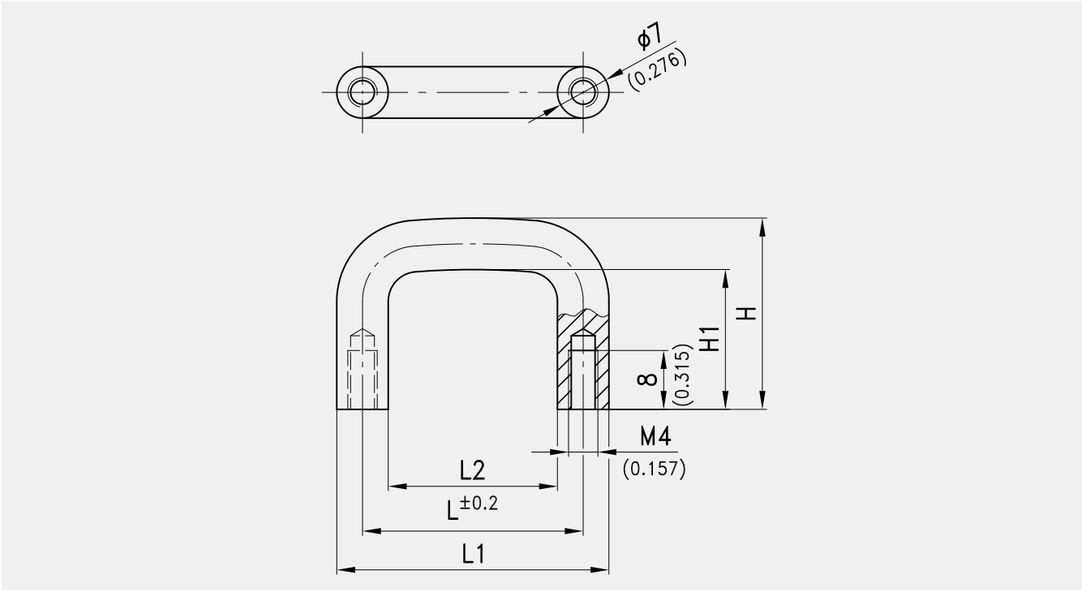

Finger pull handle

Part Number	L	L1	L2	H	H1	Installation type	Delivery Unit
213-0511.96-00030	30 mm	37 mm	23 mm	26 mm	19 mm	screw-on	10 pcs.
213-0511.96-00064	64 mm	71 mm	57 mm	26 mm	19 mm	screw-on	10 pcs.

all product details on DIRAK.com

6-1109

Bridge Handle

[6-1131]

RoHS WEEE

Advantages

- For vertical or horizontal applications.

Materials

- **Bridge handle:** zinc die, chrome plated or black

Remarks

Fastening with M4 screws.

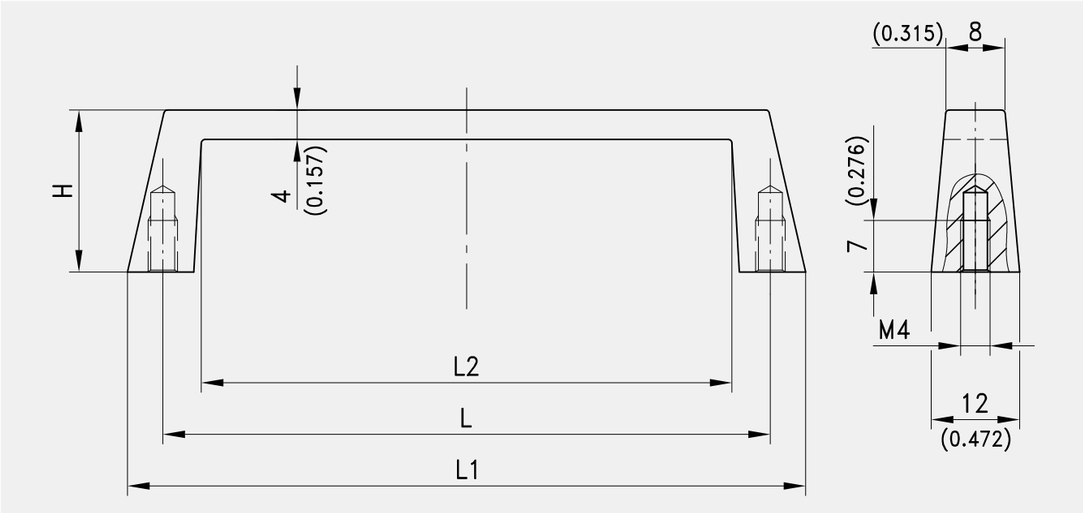

Bridge handle

Part Number	Surface	L	L1	L2	H	Installation type	Delivery Unit
213-0303.31-00000	chrome plated	81 mm	93 mm	72 mm	22 mm	screw-on	10 pcs.
213-0303.33-00000	black	81 mm	93 mm	72 mm	22 mm	screw-on	10 pcs.
213-0302.31-00000	chrome plated	95.5 mm	106 mm	85 mm	24 mm	screw-on	10 pcs.
213-0302.33-00000	black	95.5 mm	106 mm	85 mm	24 mm	screw-on	10 pcs.

6-1131

all product details on DIRAK.com

DST Bridge Handle

[6-1171DST]

Advantages

- Elegant bridge handle with DIRAK-SNAP-Technology.
- Surface matt chrome plated.
- Tool-less installation.
- For vertical or horizontal applications.

Materials

- **Handle:** zinc die, matte chrome plated
- **Other surfaces on request.**
- **Snap wedges:** sintered steel

DST

RoHS WEEE

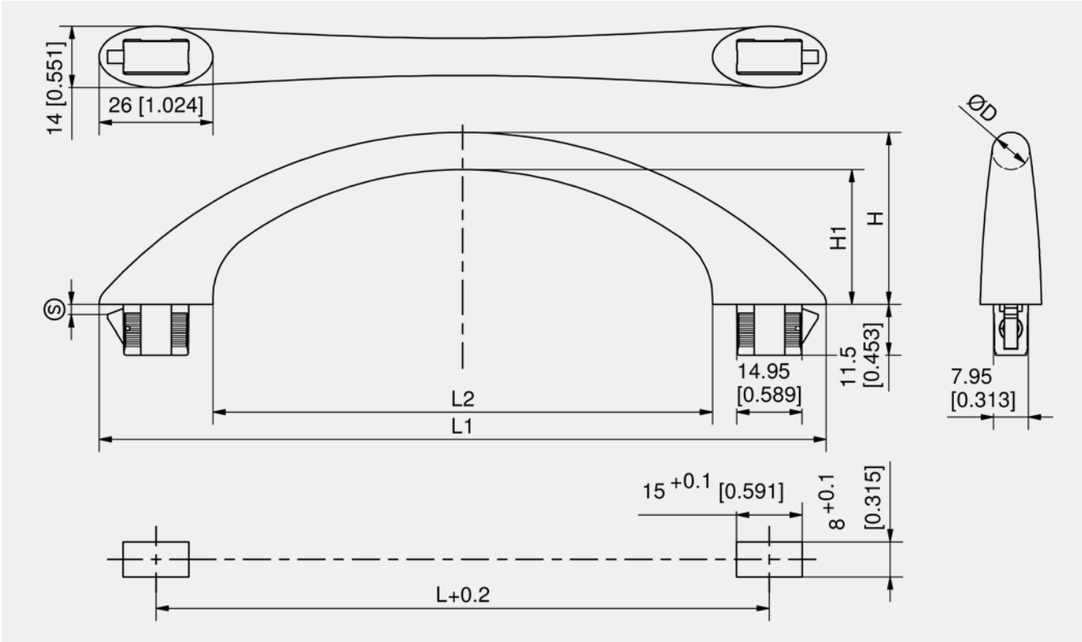

Bridge handle

Part Number	Clamping range (S)	L	L1	L2	H	H1	D	Installation type	Delivery Unit
413-9017.00-00815	0.8 - 1.5 mm	140 mm	166 mm	114 mm	39.5 mm	31 mm	8.5 mm	tool-less	10 pcs.
413-9017.00-01320	1.3 - 2.0 mm	140 mm	166 mm	114 mm	39.5 mm	31 mm	8.5 mm	tool-less	10 pcs.
413-9017.00-01522	1.5 - 2.2 mm	140 mm	166 mm	114 mm	39.5 mm	31 mm	8.5 mm	tool-less	10 pcs.
413-9018.00-00815	0.8 - 1.5 mm	180 mm	206 mm	154 mm	45.5 mm	35.5 mm	10 mm	tool-less	10 pcs.
413-9018.00-01320	1.3 - 2.0 mm	180 mm	206 mm	154 mm	45.5 mm	35.5 mm	10 mm	tool-less	10 pcs.
413-9018.00-01522	1.5 - 2.2 mm	180 mm	206 mm	154 mm	45.5 mm	35.5 mm	10 mm	tool-less	10 pcs.

all product details on DIRAK.com

6-1171DST

DST Bridge Handle OMICRON

[6-1133DST]

Advantages

- Elegant bridge handle with DIRAK-SNAP-Technology in different lengths.
- This handle is suitable for the computer industry, 19" technology, enclosures, equipments and other applications.
- Tool-less installation.

Materials

- **Bridge handle:** zinc die, matte chrome plated
- **Other surfaces on request.**
- **Snap wedges:** sintered steel

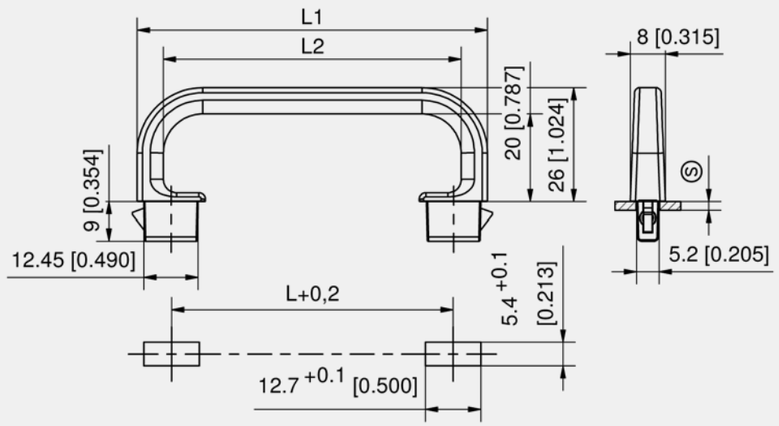

Bridge handle

Part Number	Clamping range (S)	L	L1	L2	Installation type	Delivery Unit
413-9013.40-00609	0.6 - 0.9 mm	39.3 mm	55 mm	43 mm	tool-less	10 pcs.
413-9013.40-00811	0.8 - 1.1 mm	39.3 mm	55 mm	43 mm	tool-less	10 pcs.
413-9013.40-01215	1.2 - 1.5 mm	39.3 mm	55 mm	43 mm	tool-less	10 pcs.
413-9013.40-01821	1.8 - 2.1 mm	39.3 mm	55 mm	43 mm	tool-less	10 pcs.
413-9013.40-02225	2.2 - 2.5 mm	39.3 mm	55 mm	43 mm	tool-less	10 pcs.
413-9014.40-00609	0.6 - 0.9 mm	64.3 mm	80 mm	68 mm	tool-less	10 pcs.
413-9014.40-00811	0.8 - 1.1 mm	64.3 mm	80 mm	68 mm	tool-less	10 pcs.
413-9014.40-01215	1.2 - 1.5 mm	64.3 mm	80 mm	68 mm	tool-less	10 pcs.
413-9014.40-01821	1.8 - 2.1 mm	64.3 mm	80 mm	68 mm	tool-less	10 pcs.
413-9014.40-02225	2.2 - 2.5 mm	64.3 mm	80 mm	68 mm	tool-less	10 pcs.
413-9015.40-00609	0.6 - 0.9 mm	89.3 mm	105 mm	93 mm	tool-less	10 pcs.
413-9015.40-00811	0.8 - 1.1 mm	89.3 mm	105 mm	93 mm	tool-less	10 pcs.
413-9015.40-01215	1.2 - 1.5 mm	89.3 mm	105 mm	93 mm	tool-less	10 pcs.
413-9015.40-01821	1.8 - 2.1 mm	89.3 mm	105 mm	93 mm	tool-less	10 pcs.
413-9015.40-02225	2.2 - 2.5 mm	89.3 mm	105 mm	93 mm	tool-less	10 pcs.

6-1133DST
all product details on DIRAK.com

DST Finger Pull Handle OMEGA

[6-1200.01DST]

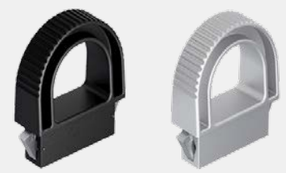

Advantages

- OMEGA small finger pull handles with DIRAK-SNAP-Technology.
- The finger pull handles are suitable for the computer industry, 19" technology, enclosures, equipments and other applications.
- Seismic-proof according to GR-63-CORE, Issue 4.
- Tool-less installation.

Materials

- **OMEGA:** zinc die, matte chrome plated or PA black
- **Other surfaces on request.**
- **Snap wedges:** sintered steel

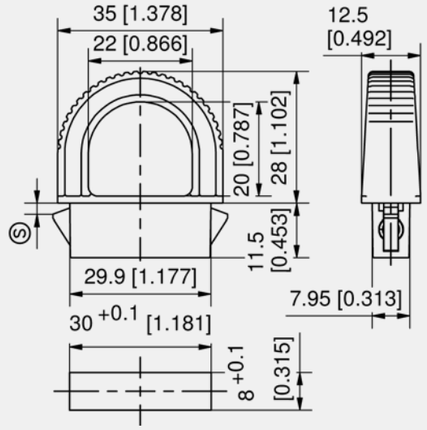

Finger pull handle

Part Number	Clamping range (S)	Material	Surface	Installation type	Delivery Unit
413-9001.00-00015	0.8 - 1.5 mm	PA	black	tool-less	10 pcs.
413-9001.00-00020	1.3 - 2.0 mm	PA	black	tool-less	10 pcs.
413-9001.00-00022	1.5 - 2.2 mm	PA	black	tool-less	10 pcs.
413-9008.00-00015	0.8 - 1.5 mm	zinc die	matte chrome plated	tool-less	10 pcs.
413-9008.00-00020	1.3 - 2.0 mm	zinc die	matte chrome plated	tool-less	10 pcs.
413-9008.00-00022	1.5 - 2.2 mm	zinc die	matte chrome plated	tool-less	10 pcs.

	Accessories
764	292-0306.80-02530 **Tool for uninstallation**
763	292-0702.15-01030 **Reinforcement plate for cutout**

all product details on DIRAK.com
6-1200.01DST

DST Finger Pull Handle OMICRON

[6-1200.02DST]

Advantages

- OMICRON small finger pull handles with DIRAK-SNAP-Technology.
- Small space requirement.
- The finger pull handles are suitable for the computer industry, 19" technology, enclosures, equipments and other applications.
- Seismic-proof according to GR-63-CORE, Issue 4.
- Tool-less installation.

Materials

- **OMICRON:** zinc die, matt chrome plated
- **Snap wedges:** sintered steel

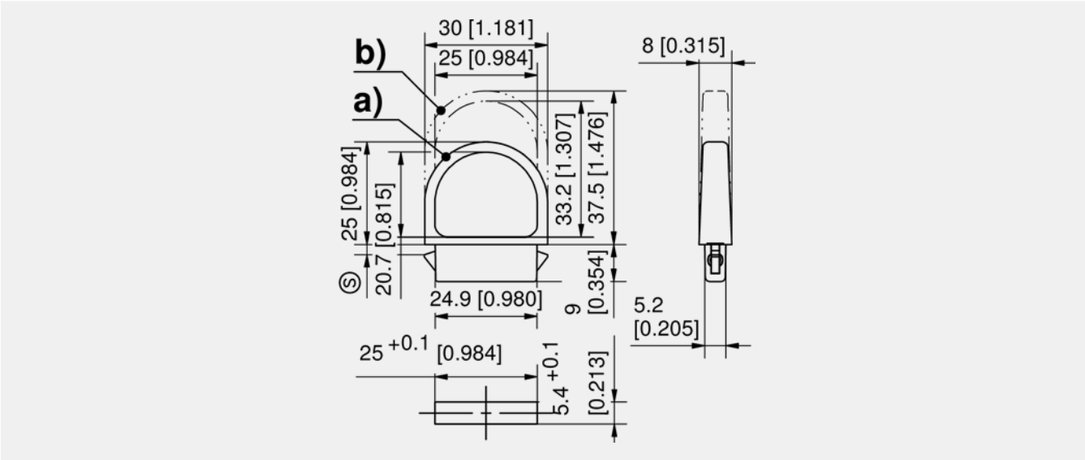

Finger pull handle OMICRON

	Part Number	Clamping range (S)	Handle height	Installation type	Delivery Unit
a)	413-9009.40-00609	0.6 - 0.9 mm	25mm	tool-less	10 pcs.
a)	413-9009.40-00811	0.8 - 1.1 mm	25mm	tool-less	10 pcs.
a)	413-9009.40-01215	1.2 - 1.5 mm	25mm	tool-less	10 pcs.
a)	413-9009.40-01821	1.8 - 2.1 mm	25mm	tool-less	10 pcs.
a)	413-9009.40-02225	2.2 - 2.5 mm	25mm	tool-less	10 pcs.
a)	413-9009.40-02427	2.4 - 2.7 mm	25mm	tool-less	10 pcs.
b)	413-9010.40-00609	0.6 - 0.9 mm	37,5mm	tool-less	10 pcs.
b)	413-9010.40-00811	0.8 - 1.1 mm	37,5mm	tool-less	10 pcs.
b)	413-9010.40-01215	1.2 - 1.5 mm	37,5mm	tool-less	10 pcs.
b)	413-9010.40-01821	1.8 - 2.1 mm	37,5mm	tool-less	10 pcs.
b)	413-9010.40-02225	2.2 - 2.5 mm	37,5mm	tool-less	10 pcs.
b)	413-9010.40-02427	2.4 - 2.7 mm	37,5mm	tool-less	10 pcs.

	Accessories
764	292-0306.80-02530 **Tool for uninstallation**

all product details on DIRAK.com
6-1200.02DST

DST Finger Pull Handle, folding

[6-1300DST]

Advantages

- Finger pull with DIRAK-SNAP-Technology, sideways folding.
- Small space requirement.
- This finger pull handle is suitable for the computer industry, 19" technology, enclosures, equipments and other applications.
- Seismic-proof according to GR-63-CORE, Issue 4.
- Tool-less installation.

Materials

- **Handle- and snap-part:** zinc die, matt chrome plated
- **Other surfaces on request!**
- **Pins:** steel, zinc plated
- **Spring:** spring steel, zinc plated
- **Snap wedges:** sintered steel

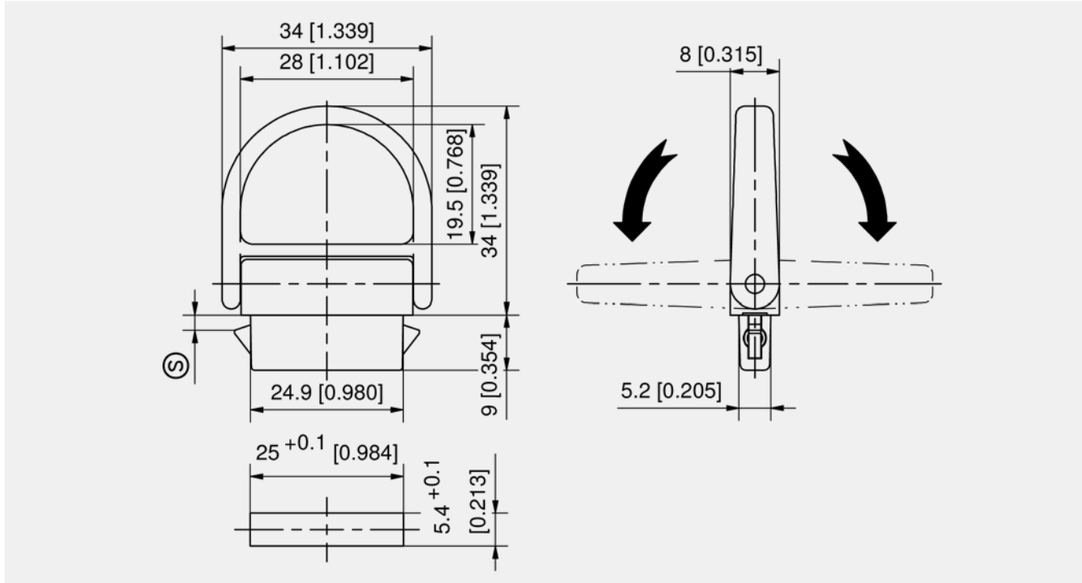

Finger pull handle

Part Number	Clamping range (S)	Installation type	Delivery Unit
413-9016.00-00811	0.8 - 1.1 mm	tool-less	10 pcs.
413-9016.00-01215	1.2 - 1.5 mm	tool-less	10 pcs.
413-9016.00-01821	1.8 - 2.1 mm	tool-less	10 pcs.
413-9016.00-02225	2.2 - 2.5 mm	tool-less	10 pcs.

	Specific accessories
764	292-0306.80-02530 **Tool for uninstallation**

all product details on DIRAK.com
6-1300DST

DST Revolving Pull Handle

[6-1330DST]

DST

RoHS WEEE

Advantages

- Revolving pull handle with DIRAK-SNAP-Technology.
- This handle is suitable for the computer industry, 19" technology, enclosures, equipments and other applications.
- The corrugation shows opening tab location.
- A soft push on the tab rotates the handle into the final, open position.
- A soft push rotates the handle into the closed position, resulting in a fully flush surface.
- Tool-less installation.
- For vertical or horizontal applications.

Materials

- **Handle and dish:** PA, black
- **Pin:** steel, zinc plated
- **Snap wedges:** sintered steel

Remarks

1. mounting position (fluting at the bottom) and closed
2. open
3. handle swiveled out

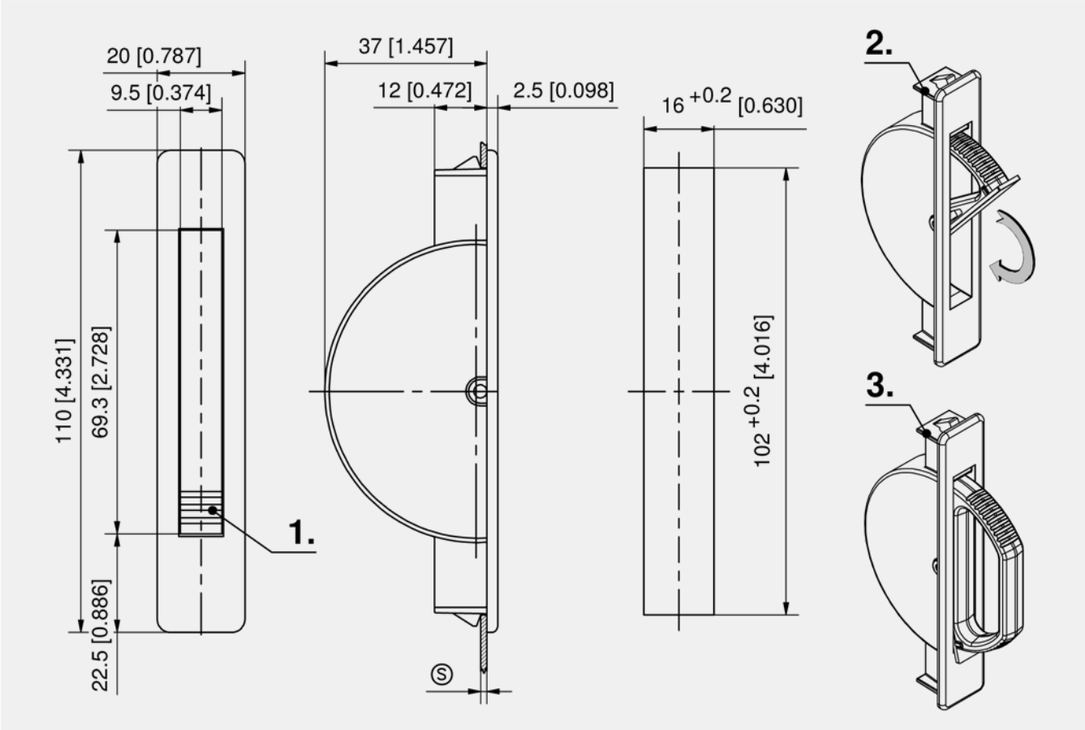

Revolving pull handle

Part Number	Clamping range (S)	Installation type	Delivery Unit
413-9005.00-00015	0.8 - 1.5 mm	tool-less	10 pcs.
413-9005.00-00020	1.3 - 2.0 mm	tool-less	10 pcs.

6-1330DST

◂ all product details on DIRAK.com

Hinged Recessed Handle, flush mounted

[6-1380]

RoHS WEEE

Advantages

- Flush-mounted hinged, recessed handle. Zinc die with or without lock and opening angle about 60° or 80°.
- The vibration proof construction makes it possible to use this flush-mounted handle in special areas such as road vehicles and railcars/wagons.
- Unauthorized activation of the recessed hinged handle is prevented by an integrated safety quarter-turn, which is operated by means of an insert key. This handle features construction, which prevents accumulation of dirt due to the completely closed housing surface.
- For vertical or horizontal applications.

Materials

- **Hinged recessed handle:** zinc die, chrome plated or black

Remarks

Weight: 510g.

1. rubber bumper

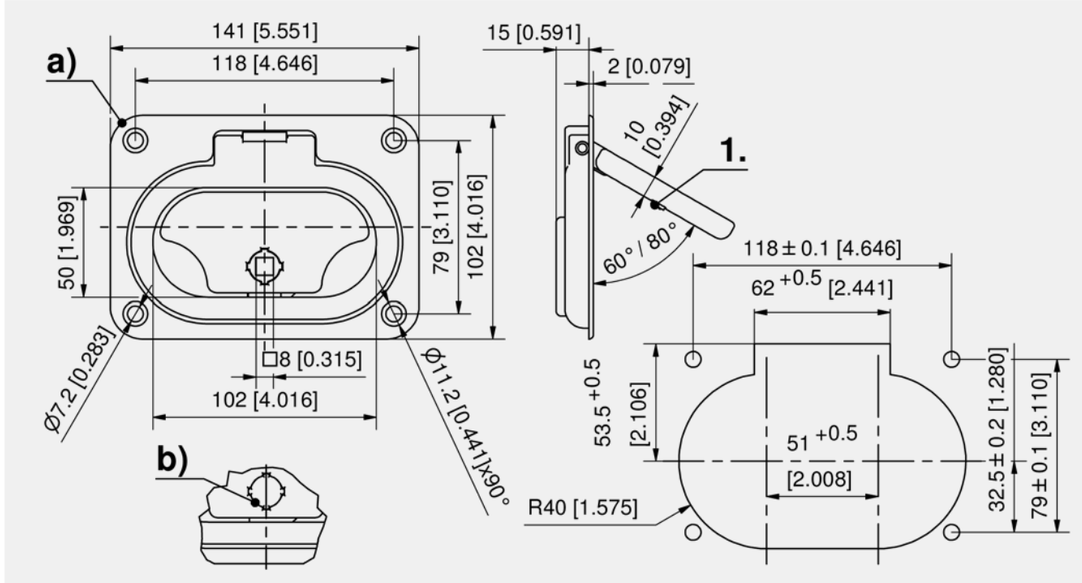

Hinged recessed handle, zinc die

	Part Number	Locking	Surface	Opening angle	Installation type	Delivery Unit
a)	213-9101.00-00060	yes	chrome plated	60°	screw-on	10 pcs.
a)	213-9102.00-00060	yes	black	60°	screw-on	10 pcs.
a)	213-9101.00-00080	yes	chrome plated	80°	screw-on	10 pcs.
a)	213-9102.00-00080	yes	black	80°	screw-on	10 pcs.
b)	213-9001.00-00060	without	chrome plated	60°	screw-on	10 pcs.
b)	213-9002.00-00060	without	black	60°	screw-on	10 pcs.
b)	213-9001.00-00080	without	chrome plated	80°	screw-on	10 pcs.
b)	213-9002.00-00080	without	black	80°	screw-on	10 pcs.

	Specific accessories
769	204-0103.00-00000 **Wrenches**
769	204-0403.03-00000 **Hollow key, (logo both sides)**
766	204-0701.07-07500 **Universal key for Inserts**

all product details ▸ on DIRAK.com

6-1380

Flush Pull Handle PA

[6-1410]

Advantages

- Can be installed without tools.
- Suitable for different door-thicknesses.

Materials

- **Dish handle:** PA, black

Remarks

The dimensions of the cutouts for different door-thicknesses are indicated in the table.

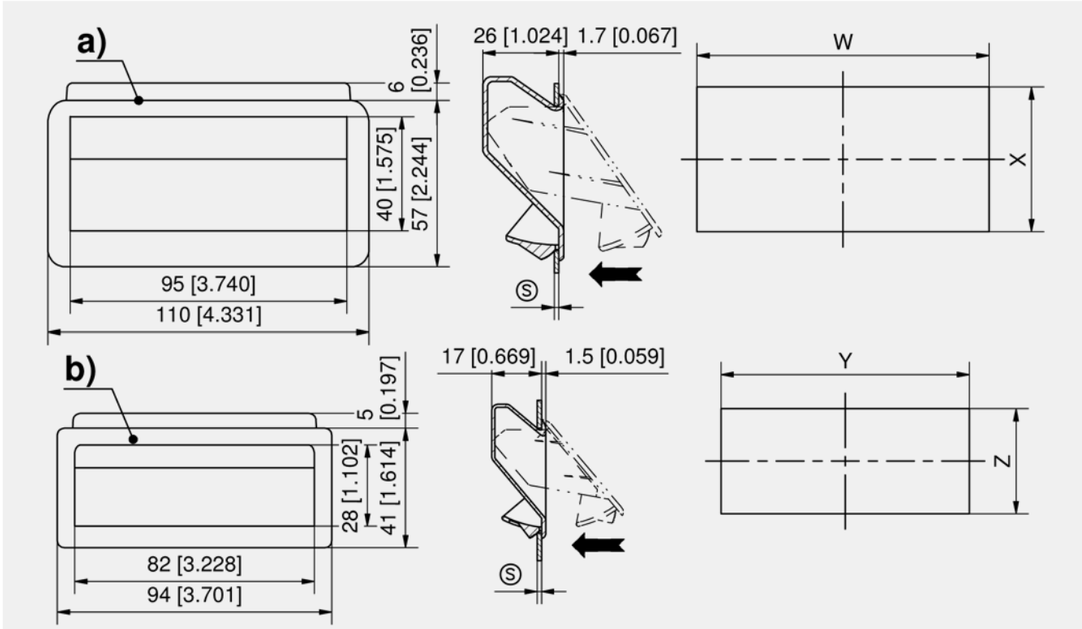

Door-thickness mm [inch]	W	X
1.5 – 1.9 [0.059 – 0.075]	100 + 0.5 [3.937]	49.6 + 0.2 [1.953]
2.0 – 3.1 [0.079 – 0.122]	100 + 0.5 [3.937]	50.3 + 0.3 [1.980]
3.2 – 3.5 [0.126 – 0.138]	100 + 0.5 [3.937]	51.0 + 0.3 [2.008]
	Y	**Z**
0.8 – 1.4 [0.032 – 0.056]	85.0 + 0.2 [3.346]	35.0 + 0.2 [1.378]
1.5 – 2.2 [0.060 – 0.087]	85.0 + 0.2 [3.346]	36.0 + 0.3 [1.417]

Recessed handle

	Part Number	Dimension	Installation type	Delivery Unit
a)	213-0705.51-00000	110 x 57 mm	clip-in	10 pcs.
b)	213-0703.03-00000	94 x 41 mm	clip-in	10 pcs.

◂ all product details on DIRAK.com
6-1410

DST Recessed Handle PA

[6-1411DST]

Advantages

- Recessed handle with DIRAK-SNAP-Technology.
- Almost flush.
- Great handle recess.
- IP65 according to DIN EN 60529.
- Tool-less installation.

Materials

- **Recessed handle:** PA, grey
- **Snap wedges:** sintered steel
- **Sealing:** EPDM, closed-cell

Remarks

1. self-adhesive seal

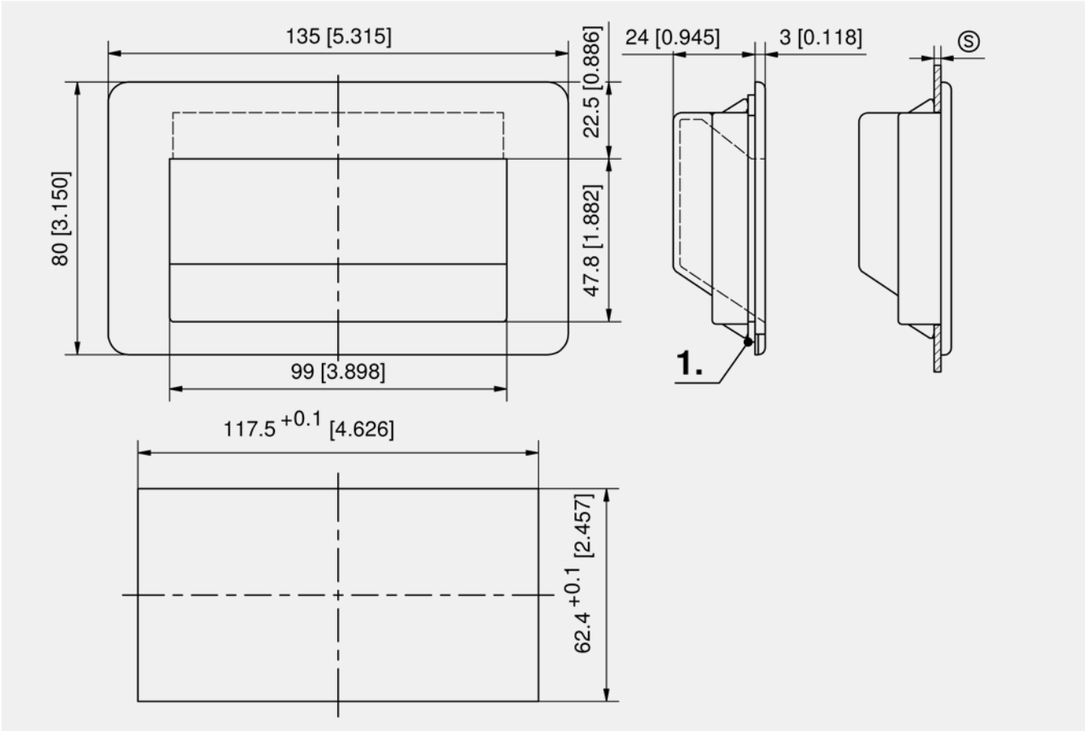

Recessed handle

Part Number	Dimension	Clamping range (S)	Installation type	Delivery Unit
352-2161.03-000CF	135 x 80 mm	1.0 - 1.7 mm	tool-less	10 pcs.
352-2161.03-000CJ	135 x 80 mm	1.8 - 2.5 mm	tool-less	10 pcs.

all product details ▸ on DIRAK.com
6-1411DST

Handle

[6-1600.01]

RoHS WEEE

Advantages

- Handle with Ø30mm in various lengths.
- The Ø30mm diameter of the tube guarantees a sure and firm grip.
- Precise and tight fit of the tube in the center support and the end pieces.
- For vertical or horizontal applications.

Materials

- **End piece, wall end piece and center support:** PA, black

Remarks

Fastening by hex. socket head cap screws M8, or hex. screws or with countersunk screws M8.

For the total size, please add 68mm to the tube length.

For wall fastening please take the end piece b).

The center support is optional, but should be applied for tube length over 466mm.

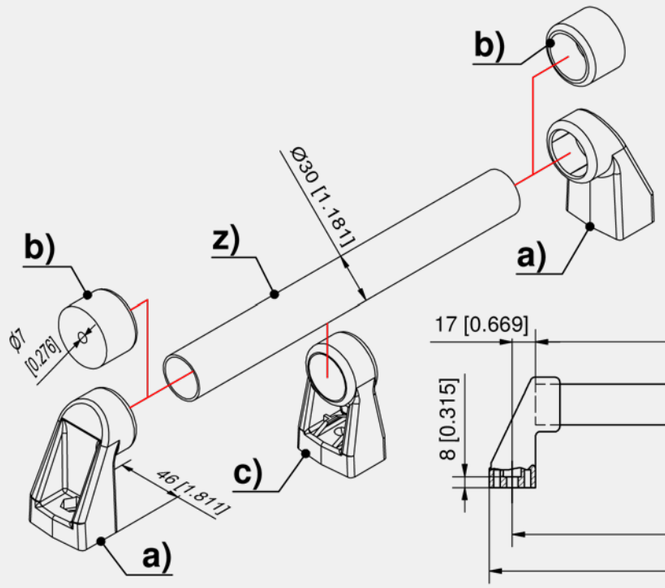

	Part number	L mm [inch]	L1 mm [inch]	L2 mm [inch]
z)	213-0401.00-00000	300 [11.811]	334 [13.150]	266 [10.472]
z)	213-0402.00-00000	400 [15.748]	434 [17.087]	366 [14.409]
z)	213-0403.00-00000	500 [19.685]	534 [20.354]	466 [18.346]
z)	213-0404.00-00000	600 [23.622]	634 [24.961]	566 [22.283]
z)	213-0405.00-00000	700 [27.560]	734 [28.898]	666 [26.220]
z)	213-0406.00-00000	800 31.496]	834 [32.835]	766 [30.157]

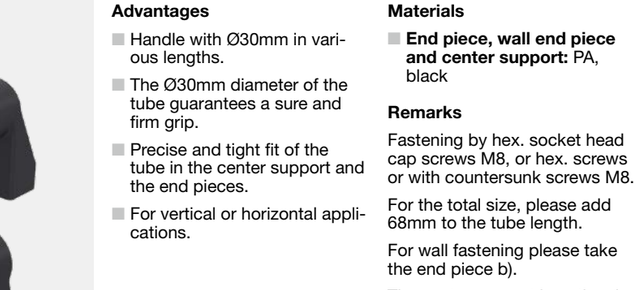

Fastening for handle

	Part Number	Handle element	Delivery Unit
a)	213-0101.03-00000	End piece	10 pcs.
b)	213-0107.03-00000	Wall end piece	10 pcs.
c)	213-0102.03-00000	Center support	10 pcs.

+	Accessories
z)	213-0401.00-00000 **Steel tube, 266mm**
z)	213-0402.00-00000 **Steel tube, 366mm**
z)	213-0403.00-00000 **Steel tube, 466mm**
z)	213-0404.00-00000 **Steel tube, 566mm**
z)	213-0405.00-00000 **Steel tube, 666mm**
z)	213-0406.00-00000 **Steel tube, 766mm**
z)	213-0407.00-00000 **Steel tube, 2500mm**
z)	213-0408.00-Lxxmm **Steel tube, variable length**

6-1600.01

all product details on DIRAK.com

DST Handle

[6-1600DST]

Advantages

- Handle with Ø30mm tube-bar with DIRAK-SNAP-Technology in various lengths.
- Insensitive to dirt and easy to clean.
- Inside radii min. 5mm.
- The Ø30mm diameter of the tube guarantees a sure and firm grip.
- Precise and tight fit of the tube in the center support and the end pieces.
- Tool-less installation.
- For vertical or horizontal applications.

Materials

- **End piece, center support:** PA, black
- **Snap wedges:** sintered steel

Remarks

For the total size, please add 51mm to the tube length.

The center support is optional, but should be applied for tube length over 466mm.

DST

RoHS WEEE

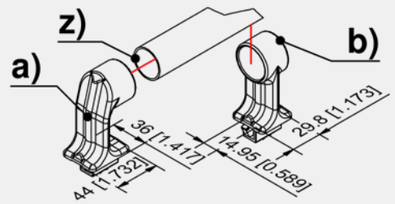

	Part number	L mm [inch]	L1 mm [inch]	L2 mm [inch]
z)	213-0401.00-00000	266 [10.472]	317 [12.480]	266 [10.472]
z)	213-0402.00-00000	366 [14.409]	417 [16.417]	366 [14.409]
z)	213-0403.00-00000	466 [18.346]	517 [20.354]	466 [18.346]
z)	213-0404.00-00000	566 [22.283]	617 [24.291]	566 [22.283]
z)	213-0405.00-00000	666 [26.220]	717 [28.228]	666 [26.220]
z)	213-0406.00-00000	766 [30.157]	817 [32.165]	766 [30.157]
z)	213-0407.00-00000	2500 [98.425]	2551 [100.434]	2500 [98.425]

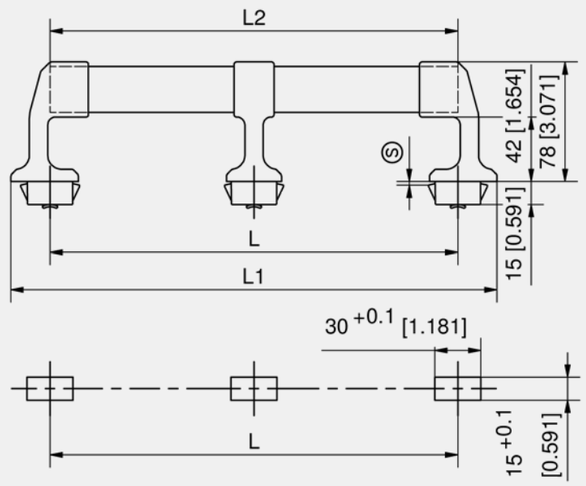

Fastening for handle

	Part Number	Name	Clamping range (S)	Installation type	Delivery Unit
a)	413-9101.00-00015	End piece	1.2 - 1.7 mm	tool-less	10 pcs.
a)	413-9101.00-00020	End piece	1.7 - 2.2 mm	tool-less	10 pcs.
a)	413-9101.00-00025	End piece	2.2 - 2.7 mm	tool-less	10 pcs.
a)	413-9101.00-00030	End piece	2.7 - 3.2 mm	tool-less	10 pcs.
b)	413-9102.00-00015	Center support	1.2 - 1.7 mm	tool-less	10 pcs.
b)	413-9102.00-00020	Center support	1.7 - 2.2 mm	tool-less	10 pcs.
b)	413-9102.00-00025	Center support	2.2 - 2.7 mm	tool-less	10 pcs.
b)	413-9102.00-00030	Center support	2.7 - 3.2 mm	tool-less	10 pcs.

+	Accessories
764	292-0301.15-00000 **Tool for uninstallation**
764	292-0306.80-02530 **Tool for uninstallation**
763	292-0701.15-01530 **Reinforcement plate for cutout**
z)	213-0401.00-00000 **Steel tube, 266mm**
z)	213-0402.00-00000 **Steel tube, 366mm**
z)	213-0403.00-00000 **Steel tube, 466mm**
z)	213-0404.00-00000 **Steel tube, 566mm**
z)	213-0405.00-00000 **Steel tube, 666mm**
z)	213-0406.00-00000 **Steel tube, 766mm**

all product details on DIRAK.com

6-1600DST

Handle, bent

[6-1600.02]

RoHS WEEE

Advantages

- Handle, bent with Ø30mm in various length.
- This handle is suitable for large and heavy doors and controlling enclosures.
- The Ø30mm diameter of the tube guarantees a sure and firm grip.
- Precise and tight fit of the tube in the end pieces.
- For vertical or horizontal applications.

Materials

- **End piece:** PA, black

Remarks

Fastening by hex. socket head cap screws M8, or hex. screws or with countersunk screws M8.

For the total size, please add 10mm to the tube length.

If needed center support and wall end piece from handle 6-1600.01 can be used.

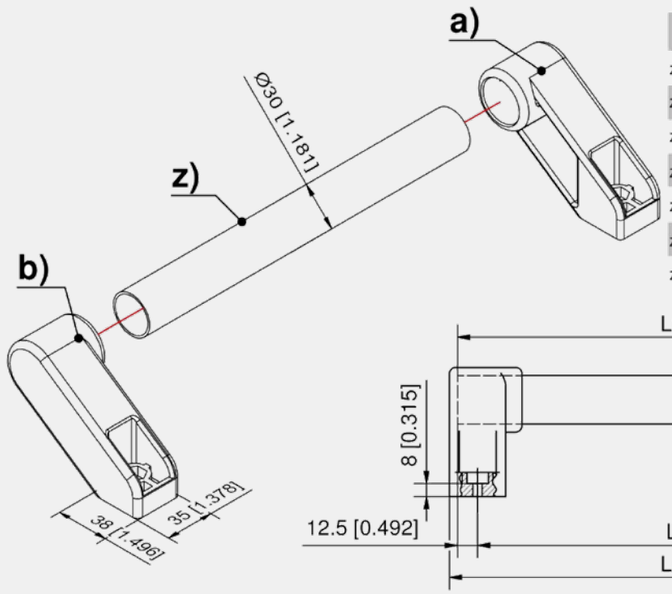

	Part number	L mm [inch]	L1 mm [inch]	L2 mm [inch]
z)	213-0401.00-00000	241 [9.488]	276 [10.866]	266 [10.472]
z)	213-0402.00-00000	341 [13.425]	376 [14.803]	366 [14.409]
z)	213-0403.00-00000	441 [17.362]	476 [18.740]	466 [18.346]
z)	213-0404.00-00000	541 [21.299]	576 [22.677]	566 [22.283]
z)	213-0405.00-00000	641 [25.236]	676 [26.614]	666 [26.220]
z)	213-0406.00-00000	741 [29.173]	776 [30.551]	766 [30.157]
z)	213-0407.00-00000	2475 [97.441]	2510 [98.818]	2500 [98.425]

Fastening for handle

	Part Number	Handle element	Delivery Unit
a)	213-0103.03-00000	End piece, bent, RH	10 pcs.
b)	213-0104.03-00000	End piece, bent, LH	10 pcs.

+	Accessories
z)	213-0401.00-00000 **Steel tube, 266mm**
z)	213-0402.00-00000 **Steel tube, 366mm**
z)	213-0403.00-00000 **Steel tube, 466mm**
z)	213-0404.00-00000 **Steel tube, 566mm**
z)	213-0405.00-00000 **Steel tube, 666mm**
z)	213-0406.00-00000 **Steel tube, 766mm**
z)	213-0407.00-00000 **Steel tube, 2500mm**
z)	213-0408.00-Lxxmm **Steel tube, variable length**

6-1600.02

◂ all product details on DIRAK.com

DST Grip Handles

[6-1500DST]

Advantages

- Flat grip handles with DIRAK-SNAP-Technology for 19" technology.
- Small space requirement.
- Suitable for enclosures, equipments and other applications.
- Tool-less installation.
- For vertical or horizontal applications.

Materials

- **Grip handle:** zinc die, matt chrome plated or black
- **Other surfaces on request.**
- **Snap wedges:** sintered steel

DST

RoHS WEEE

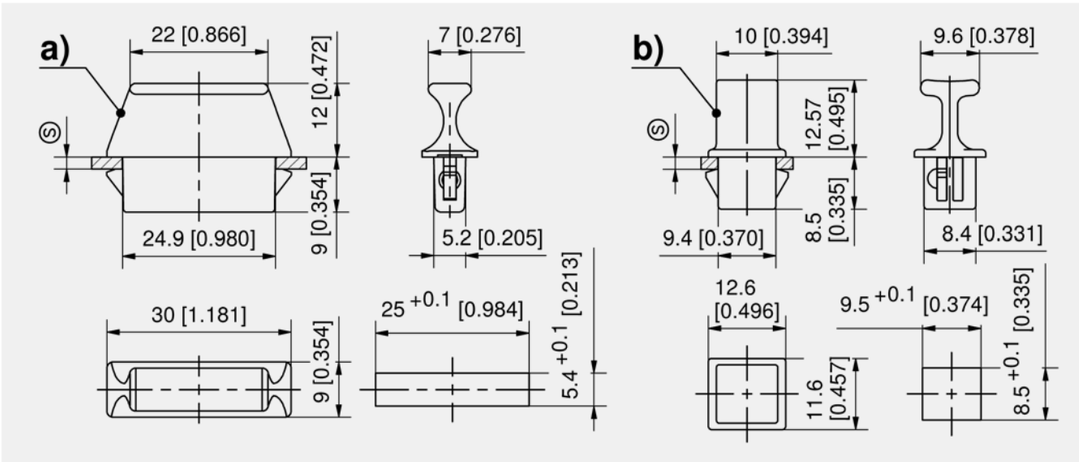

Grip handle, zinc die

	Part Number	Clamping range (S)	Cutout	Surface	Installation type	Delivery Unit
a)	413-9201.00-00609	0.6 - 0.9 mm	25 x 5.4	matte chrome plated	tool-less	10 pcs.
a)	413-9201.00-00811	0.8 - 1.1 mm	25 x 5.4	matte chrome plated	tool-less	10 pcs.
a)	413-9201.00-01215	1.2 - 1.5 mm	25 x 5.4	matte chrome plated	tool-less	10 pcs.
a)	413-9201.00-01821	1.8 - 2.1 mm	25 x 5.4	matte chrome plated	tool-less	10 pcs.
a)	413-9201.00-02225	2.2 - 2.5 mm	25 x 5.4	matte chrome plated	tool-less	10 pcs.
b)	413-9202.00-00810	0.8 - 1.0 mm	9.5 x 8.5	matte chrome plated	tool-less	10 pcs.
b)	413-9202.00-01113	1.1 - 1.3 mm	9.5 x 8.5	matte chrome plated	tool-less	10 pcs.
b)	413-9202.00-01215	1.2 - 1.5 mm	9.5 x 8.5	matte chrome plated	tool-less	10 pcs.
b)	413-9202.00-02022	2.2 - 2.5 mm	9.5 x 8.5	matte chrome plated	tool-less	10 pcs.
b)	413-9203.00-00810	0.8 - 1.0 mm	9.5 x 8.5	black	tool-less	10 pcs.
b)	413-9203.00-01113	1.1 - 1.3 mm	9.5 x 8.5	black	tool-less	10 pcs.
b)	413-9203.00-01215	1.2 - 1.5 mm	9.5 x 8.5	black	tool-less	10 pcs.
b)	413-9203.00-02022	2.2 - 2.5 mm	9.5 x 8.5	black	tool-less	10 pcs.

+	Specific accessories
764	292-0306.80-02530 **Tool for uninstallation**

all product details ▸ on DIRAK.com

6-1500DST

Fastening Technology

DST

SIMPLE. SECURE. DIRAK-SNAP-TECHNOLOGY.

In a world full of connections, we deliver pioneering technology. With DIRAK-SNAP-Technology (DST), you can create high-strength connections easily and without tools – so that your idea can safely become great.

To discover unlimited possibilities, try a new approach easily and at any time with DIRAK-SNAP-Technology. Now you too can use the best solution for your applications and experience the special features of this trendsetting technology – discover what is possible.

High strength with secure locking

Tool-less installation in just seconds – reliable and convenient disassembly

Connect materials with different thicknesses

Rattle, vibration and seismic-proof

Reliable and error-free installation – even in places that are hard to reach

Secure and electrically conductive

Cannot be lost.

The DST fastener is captive so it cannot be lost, thus meeting the requirements of the Machinery Directive 2006/42EC.

Page 735

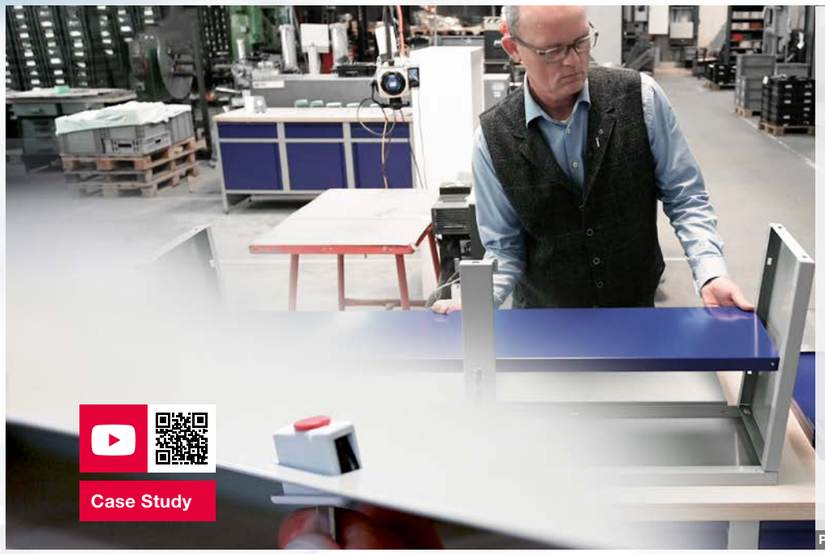

Installation in just seconds at Haromac thanks to DST.

Oliver Lück, Managing Director of the HAROMAC tool factory: "The workbenches presented a new challenge for us. They had to provide good load-bearing capacity and be easy to assemble without any screws and with just a few tools. The DST fasteners meet our standards for fast assembly with no screws and good load-bearing capacity, and they are especially well suited for our workbenches."

Page 737

Fastener for applications requiring electrical conductivity.

Page 747

Offers potential.

The DIRAK grounding cage nut has been successfully tested to DIN EN 61439-1 (VDE 0660 part 600):2012:06 and offers a reliable electrically conductive connection at all times.

If you do use screws, try this way.

Potential equalization with a screw: With the new countersunk grounding screw, a segment cutting edge and scraping tooth can be used to create electrical connections between two metal sheets even without any additional small parts.

Page 752

Fastening Technology

Fastening Technology

Fastener

Page: **726–745**

Seismic-proof 726, 728–730, 734–735, 739
Vibration-proof 726, 728–730, 734–735, 739
Machinery directive 728–730, 734–736
Conductive 739

Cage nuts

Page: **746–750**

Seismic-proof 746, 748, 750
Vibration-proof 746, 748, 750
Front mounted 746–747, 750
Conductive 747

Screws

Page: **748-748**

IP protected 751
Blind assembly 757
Anti-twist 756
Under-head teeth 754
Conductive 752

Overview

726 PA Fastener □ 9.5 and □ 12.7 [1-020]

727 DST Fastener □ 9.7 [1-041.01DST]

728 DST Captive Flex-Fastener □ 9.5 [1-034DST]

729 DST Captive Flex-Fastener □ 9.5 [1-034.01DST]

730 DST Captive Faste-ner □ 9.5 [1-035DST]

731 DST Fastener □ 9.5 [1-041.03DST]

732 DST Fastener □ 9.5 without Leaf Spring [1-041.04DST]

733 DST Fastener □ 9.5 with Leaf Spring [1-041.05DST]

734 DST Captive Faste-ner □ 9.5 [1-041.06DST]

735 DST Captive Faste-ner □ 12.7 [1-041.02DST]

736 DST Captive Faste-ner □ 18.7 [1-041.09DST]

737 DST Fastener 8x15 [1-040DST]

738 DST Fastener 30x10 [1-042DST]

739 DST Fastener 30x14 [1-043DST]

740 DST DUAL Fastener 30x10 [1-044DST]

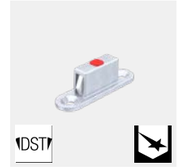

742 DST Fastener 30x10 Stainless Steel [7-913DST]

743 DST Fastener 30x10 [1-046DST]

744 DST DUAL Fastener 30x10 [1-045DST]

746 Cage Nut □ 9.5 [6-045]

747 Grounding Cage Nut □ 9.5 [6-046]

748 Cage Nuts □ 9.5 [6-045.01]

750 Cage Nuts [6-045.02]

751 Screw Assembly for Terminal Box Cover [6-043]

752 Grounding Counter-sunk Screw [6-044]

754 Serrated Screws [6-040]

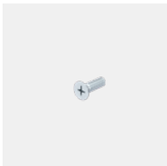

755 Countersunk Screws and Hexagon Nuts [6-041]

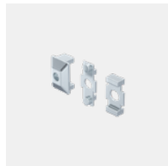

756 Tenon Blocks and Anti-twist Protection [4-248]

757 Nut Plates [6-042]

PA Fastener □9.5 and □12.7

[1-020]

Advantages

- To clip-in for □9.5 or □12.7 cutout or with 10mm gap, e.g. aluminum profiles.
- Audible click ensures proper secure installation.
- Seismic-proof according to GR-63-CORE, Issue 4.
- Vibration-proof according to DIN EN 61373.
- The square base 9.2 and 12.5 prevents the joiner from turning within the installation cutout.

Materials

- **Fastener:** PA, black

Remarks

The (S) dimension indicates the total thickness of the sheet metal panels.

1. cutout for a) and b)
2. cutout for c) and d)
3. aluminum profile fit for a) and b)
4. groove

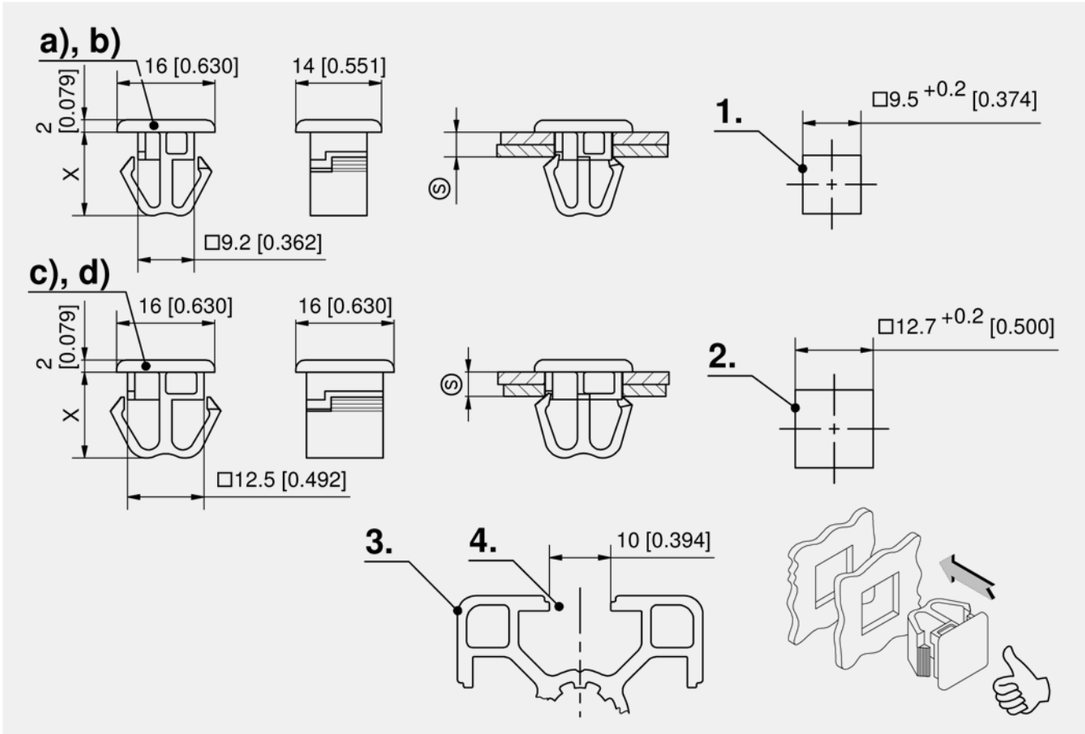

Fastener

	Part Number	Clamping range (S)	Cutout	Dimension X	Installation type	Delivery Unit
a)	214-0109.51-00000	3.0 - 3.5 mm	9.5	12.6 mm	tool-less	250 pcs.
b)	214-0109.51-10000	4.0 - 4.5 mm	9.5	13.6 mm	tool-less	250 pcs.
c)	214-0109.51-20000	3.0 - 3.5 mm	12.7	13 mm	tool-less	250 pcs.
d)	214-0109.51-30000	4.0 - 4.5 mm	12.7	14 mm	tool-less	250 pcs.

all product details on DIRAK.com
1-020

DST Fastener □9.7

[1-041.01DST]

Advantages

- With DIRAK-SNAP-Technology for joining flat metal sheets.
- For cutout □9.7.
- Vibration-proof.
- Tool-less installation.
- The joining of metal sheets is achieved by pressing the fastener into the cutouts.

Materials

- **Housing:** zinc die, untreated
- **Snap wedges:** sintered steel, zinc plated

Remarks

The dimension (S) always means the thickness of both sheets together

1. cutout rear panel, also possible as ablong hole for tolerance adjustment.
2. cutout front panel

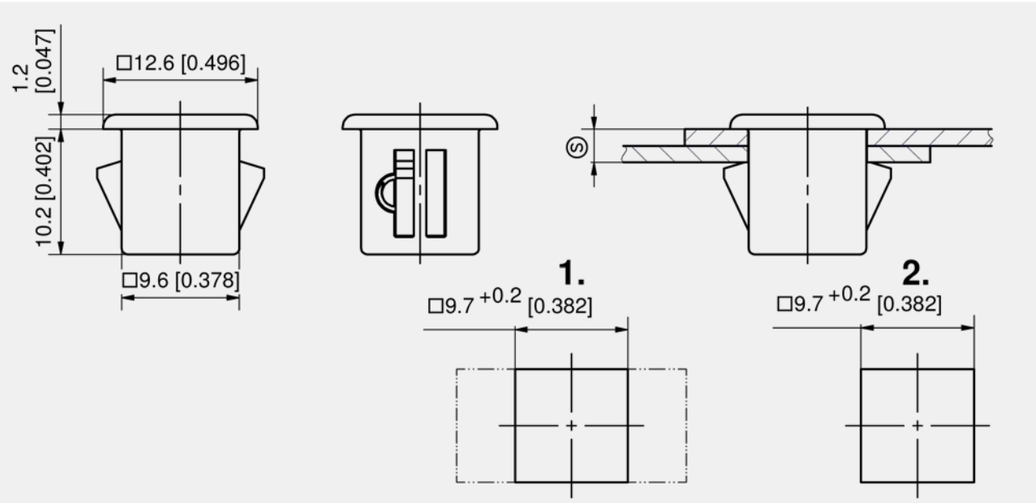

Fastener

Part Number	Clamping range (S)	Installation type	Delivery Unit
294-9104.00-02224	2.2 - 2.4 mm	tool-less	10 pcs.
294-9104.00-02527	2.5 - 2.7 mm	tool-less	10 pcs.
294-9104.00-02830	2.8 - 3.0 mm	tool-less	10 pcs.
294-9104.00-03133	3.1 - 3.3 mm	tool-less	10 pcs.

all product details on DIRAK.com
1-041.01DST

DST Captive Flex-Fastener □ 9.5

[1-034DST]

DST

DIN 61373

RoHS WEEE

Advantages

- With DIRAK-SNAP-Technology for joining of flat metal sheets and securely latching doors and covers.
- For cutout □ 9.5.
- Meets machinery directive 2006/42EC.
- After pre-assembly the concern of losing, dropping or misplacing hardware is eliminated.
- Held securely in the cutout.
- Seismic-proof according to GR-63-CORE, Issue 4.
- Vibration-proof according to DIN EN 61373.
- Operation by Phillips H2
- Opening by a 1/4 turn of the insert.
- Self-adjusting clamping range of 0.5 - 5.5mm.
- One-piece.

Materials

- **Housing and washer:** zinc die, chrome plated
- **Insert:** aluminum, hardened
- **Springs:** spring steel
- **SNAP wedges:** sintered steel, zinc plated

Remarks

Removal: by turning the screwdriver counterclockwise, the SNAP wedges (3.) are retracted. The compression spring (2.) pushes the Fastener out of the rear panel, but it remains captive in the front panel, held by the U-shaped spring (1.). (4.) Cutout in the rear panel can also be an oblong hole for tolerance adjustment. (5.) Cutout front panel. The (S) dimension indicates the total thickness of the sheet metal panels.

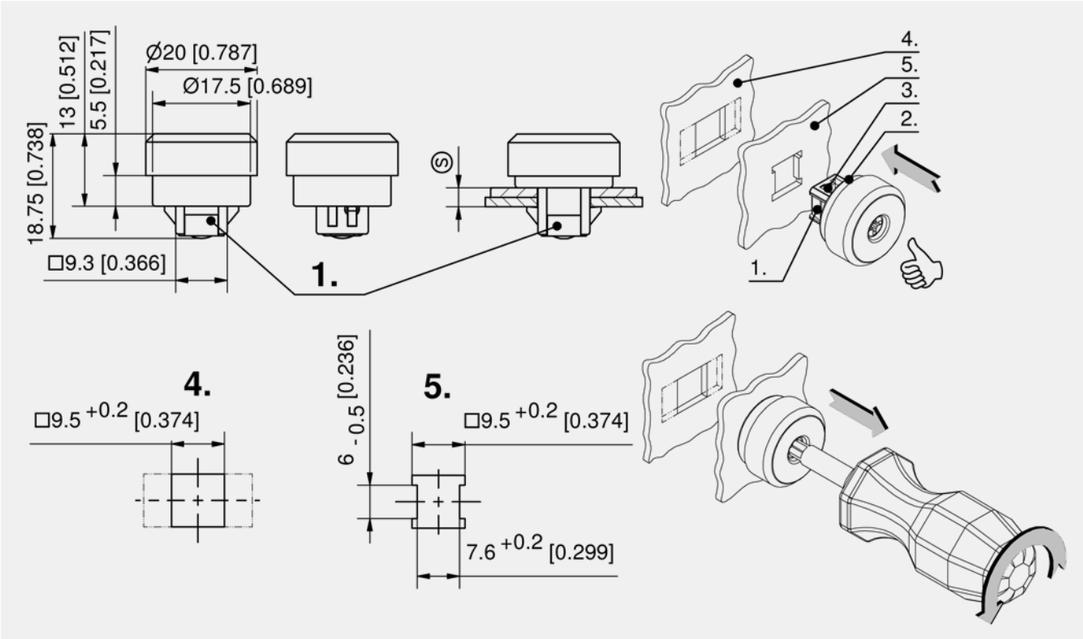

Fastener

Part Number	Clamping range (S)	Insert	Installation type	Delivery Unit
294-9302.00-00055	0.5 - 5.5 mm	Phillips H2	tool-less	10 pcs.

1-034DST

◂ all product details on DIRAK.com

DST Captive Flex-Fastener □ 9.5

[1-034.01DST]

DST

DIN 61373

RoHS WEEE

Advantages

- With DIRAK-SNAP-Technology for joining of flat metal sheets and securely latching doors and covers.
- For cutout □ 9.5.
- Meets machinery directive 2006/42EC.
- After pre-assembly the concern of losing, dropping or misplacing hardware is eliminated.
- Held securely in the cutout.
- Seismic-proof according to GR-63-CORE, Issue 4.
- Vibration-proof according to DIN EN 61373.
- Opening by a ¼ turn by means of handwheel with freestroke.
- Self-adjusting clamping range of 0.5 - 5.5mm.
- One-piece.

Materials

- **Housing and washer:** zinc die, chrome plated
- **Handwheel:** PA6, black
- **Springs:** spring steel
- **Snap wedges:** sintered steel, zinc plated

Remarks

Removal: by turning the Handwheel (2.) counterclockwise, the SNAP wedges (4.) are retraced. The leaf spring inside (3.) pushes the fastener out of the rear panel, however, the U-shaped (1.) spring holes the Fastener captive in the front panel (6.). (5.) Cutout in the rear panel can also be an ablong hole for tolerance adjustment. The (S) dimension indicates the total thickness of the sheet metal panels.

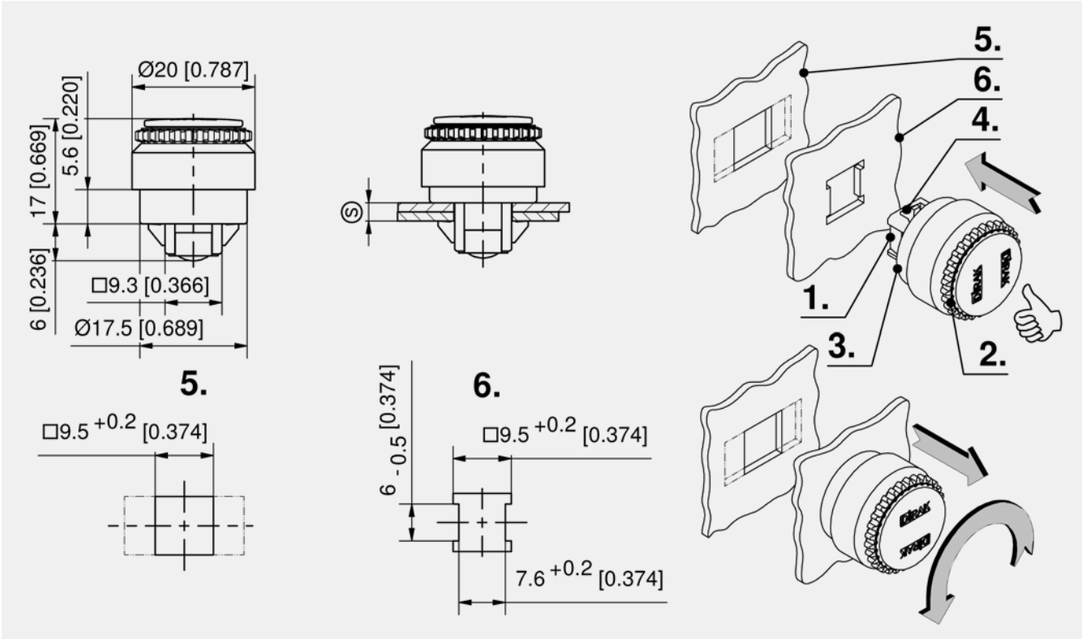

Fastener

Part Number	Insert	Clamping range (S)	Installation type	Delivery Unit
294-9303.00-00055	Handwheel	0.5 - 5.5 mm	tool-less	10 pcs.

all product details ▸ on DIRAK.com

1-034.01DST

DST Captive Fastener □ 9.5

[1-035DST]

DIN 61373

RoHS WEEE

Advantages

- With DIRAK-SNAP-Technology for joining of flat metal sheets and securely latching doors and covers.
- For cutout □ 9.5.
- Meets machinery directive 2006/42EC.
- After pre-assembly the concern of losing, dropping or misplacing hardware is eliminated.
- Held securely in the cutout.
- Seismic-proof according to GR-63-CORE, Issue 4.
- Vibration-proof according to DIN EN 61373.
- Operation by handwheel / Phillips H2 or Torx 15.
- Opening by a ¼ turn of the insert.
- One-piece.

Materials

- **Housing:** zinc die, matt chrome plated or black
- **Insert:** zinc die, zinc plated
- **Springs:** spring steel
- **Snap wedges:** sintered steel, zinc plated

Remarks

Removal: turning the screwdriver counterclockwise draws back the SNAP wedges (3.). The leaf spring (1.) pushes the fastener out of the rear panel, but it remains captive in the front panel, held by the U-shaped spring (2.). (4.) Cutout in the rear panel can also be an ablong hole for tolerance adjustment. (5.) Cutout front panel. The (S) dimension indicates the total thickness of the sheet metal panels.

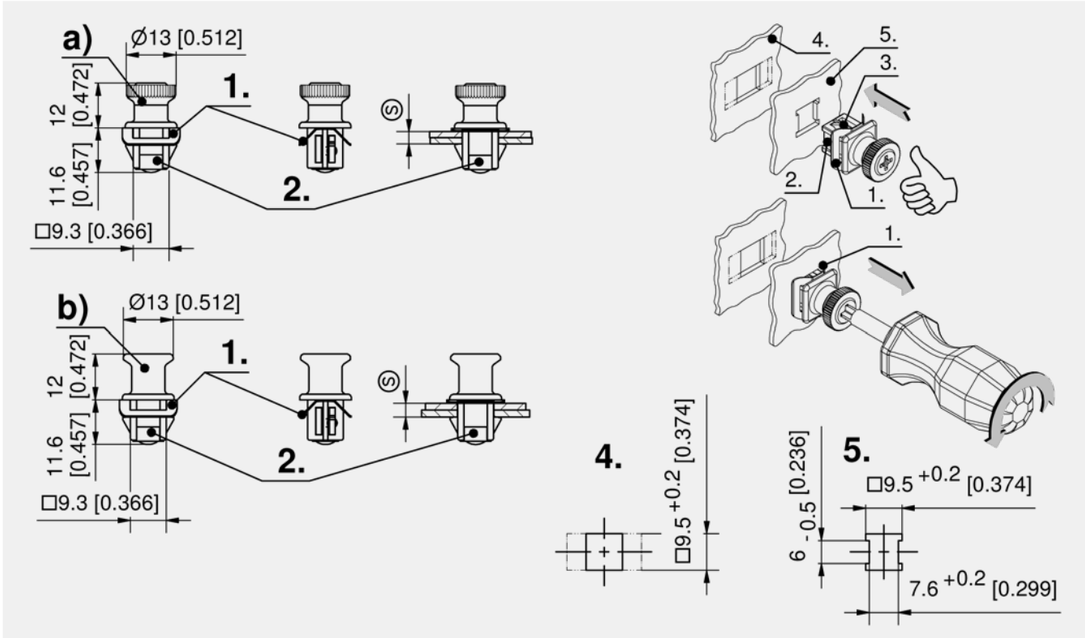

Fastener, zinc die

	Part Number	Surface	Clamping range (S)	Insert	Installation type	Delivery Unit
a)	294-9210.00-00017	chrome plated	1.5 - 2.0 mm	Turning knob/Phillips H2	tool-less	10 pcs.
a)	294-9210.00-00026	chrome plated	2.5 - 2.8 mm	Turning knob/Phillips H2	tool-less	10 pcs.
a)	294-9210.00-00034	chrome plated	3.3 - 3.6 mm	Turning knob/Phillips H2	tool-less	10 pcs.
a)	294-9210.00-00042	chrome plated	4.1 - 4.4 mm	Turning knob/Phillips H2	tool-less	10 pcs.
a)	294-9211.00-00017	black	1.5 - 2.0 mm	Turning knob/Phillips H2	tool-less	10 pcs.
a)	294-9211.00-00026	black	2.5 - 2.8 mm	Turning knob/Phillips H2	tool-less	10 pcs.
a)	294-9211.00-00034	black	3.3 - 3.6 mm	Turning knob/Phillips H2	tool-less	10 pcs.
a)	294-9211.00-00042	black	4.1 - 4.4 mm	Turning knob/Phillips H2	tool-less	10 pcs.
b)	294-9220.00-00138	black	3.7 - 4.0 mm	Torx insert	tool-less	10 pcs.

◂ all product details on DIRAK.com
1-035DST

DST Fastener □ 9.5

[1-041.03DST]

Advantages

- With DIRAK-SNAP-Technology for joining of metal sheets.
- For cutout □ 9.5.
- Vibration-proof.
- Tool-less installation.
- This fastener can be disengaged from the front of the panel using a flathead screwdriver (Size max. 7x1mm, min. 6x1mm).
- The joining of metal sheets is achieved by pressing the fastener into the cutouts.

Materials

- **Housing:** zinc die, untreated
- **SNAP wedges:** sintered steel, zinc plated
- **Leaf spring:** stainless steel

Remarks

Removal: by turning the screwdriver clockwise, the SNAP wedges (2.) are retracted. **a):** The fastener can be pressed manually from the back of the sheet. **b):** The leaf spring (1.) pushes the fastener out of the rear panel. (3.) Cutout in the rear panel can also be an ablong hole for tolerance adjustment. (4.) Cutout front panel. The (S) dimension indicates the total thickness of the sheet metal panels.

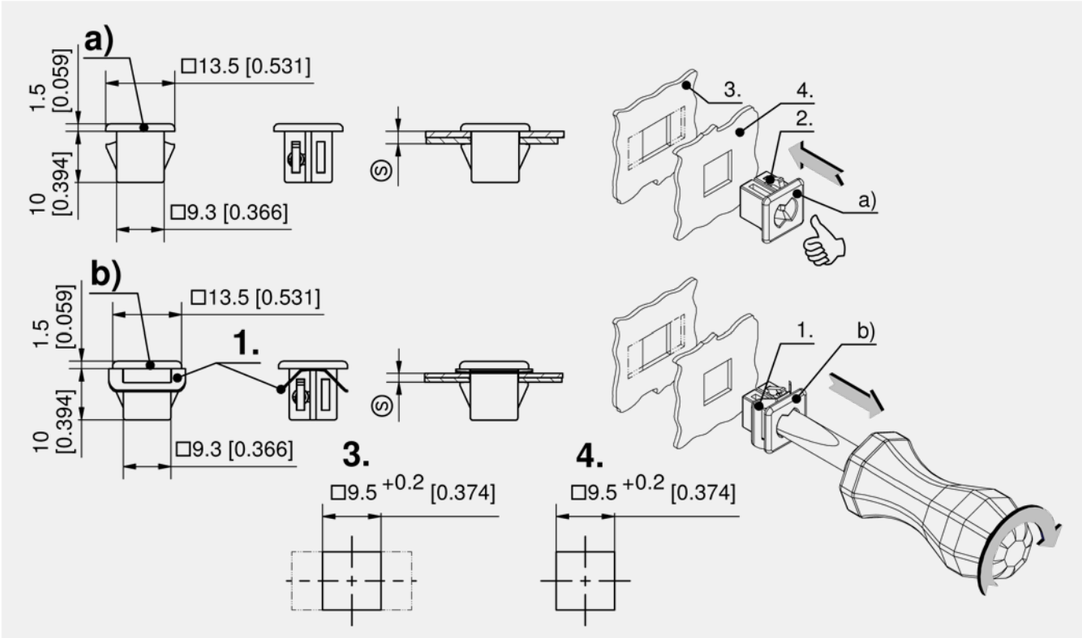

Fastener with slotted insert

	Part Number	Version	Clamping range (S)	Installation type	Delivery Unit
a)	294-9117.00-00022	without leaf spring	2.0 - 2.5 mm	tool-less	10 pcs.
a)	294-9117.00-00031	without leaf spring	3.0 - 3.3 mm	tool-less	10 pcs.
a)	294-9117.00-00035	without leaf spring	3.4 - 3.7 mm	tool-less	10 pcs.
a)	294-9117.00-00043	without leaf spring	4.2 - 4.5 mm	tool-less	10 pcs.
b)	294-9116.00-00017	with leaf spring	1.5 - 2.0 mm	tool-less	10 pcs.
b)	294-9116.00-00026	with leaf spring	2.5 - 2.8 mm	tool-less	10 pcs.
b)	294-9116.00-00030	with leaf spring	2.9 - 3.2 mm	tool-less	10 pcs.
b)	294-9116.00-00038	with leaf spring	3.7 - 4.0 mm	tool-less	10 pcs.

all product details ▸ on DIRAK.com
1-041.03DST

DST Fastener □ 9.5 without Leaf Spring [1-041.04DST]

Advantages

- With DIRAK-SNAP-Technology for joining sheet metal panels.
- For cutout □ 9.5.
- Vibration-proof.
- Tool-less installation.
- This fastener can be disengaged from the front of the panel using a Phillips H2 screwdriver.
- Sheet metal panels are easily joined by manually pressing the fastener through the panel cutout.
- One piece.

Materials

- **Housing:** zinc die, untreated
- **SNAP wedges:** sintered steel, zinc plated
- **Insert:** aluminum, hardened

Remarks

Removal: by turning the screwdriver counterclockwise, the SNAP wedges (1.) are retracted. The leaf spring pushes the fastener out of rear panel, however, the U-shaped spring holds the fastener captive in the front panel. (3.) Cutout in the rear panel can also be an oblong hole for tolerance adjustment. (2.) Cutout front panel. The (S) Dimension indicates the total thickness of the sheet metal panels.

Delivery time on request!

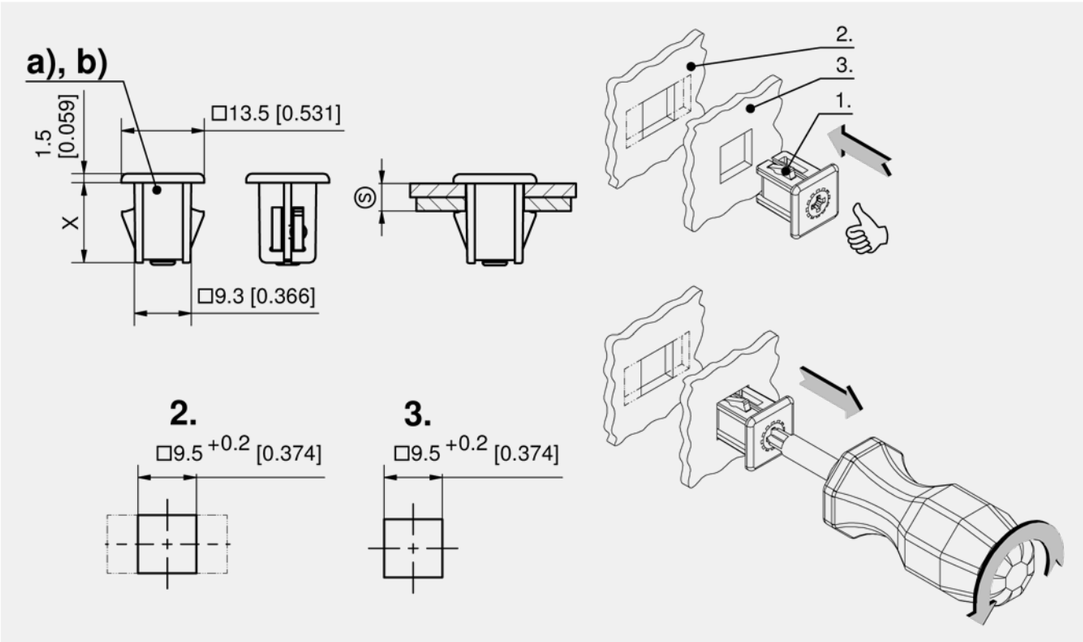

Fastener with insert Phillips H2, without leaf spring

	Part Number	Clamping range (S)	Dimension X	Installation type	Delivery Unit
a)	294-9114.00-00031	3.0 - 3.3 mm	11 mm	tool-less	10 pcs.
a)	294-9114.00-00039	3.8 - 4.1 mm	11 mm	tool-less	10 pcs.
b)	294-9120.00-00042	4.0 - 4.5 mm	13 mm	tool-less	10 pcs.
b)	294-9120.00-00051	5.0 - 5.3 mm	13 mm	tool-less	10 pcs.
b)	294-9120.00-00055	5.4 - 5.7 mm	13 mm	tool-less	10 pcs.
b)	294-9120.00-00059	5.8 - 6.1 mm	13 mm	tool-less	10 pcs.
b)	294-9120.00-00067	6.6 - 6.9 mm	13 mm	tool-less	10 pcs.

1-041.04DST
◂ all product details on DIRAK.com

DST Fastener □ 9.5 with Leaf Spring [1-041.05DST]

Advantages

- With DIRAK-SNAP-Technology for joining sheet metal panels.
- For cutout □ 9.5.
- Vibration-proof.
- Tool-less installation.
- This fastener can be disengaged from the front of the panel using a Phillips H2 screwdriver.
- Sheet metal panels are easily joined by manually pressing the fastener through the panel cutout.
- One piece.

Materials

- **Housing:** zinc die, untreated
- **SNAP wedges:** sintered steel, zinc plated
- **Leaf spring:** stainless steel
- **Insert:** aluminum, hardened

Remarks

1. leaf spring
2. SNAP wedges
3. cutout rear panel, also possible as oblong hole for tolerance adjustment.
4. cutout front panel

Removal: by turning the screwdriver counterclockwise, the SNAP wedges are retracted. The leaf spring pushes the fastener out of rear panel. The (S) dimension indicates the total thickness of the sheet metal panels.

Delivery time on request!

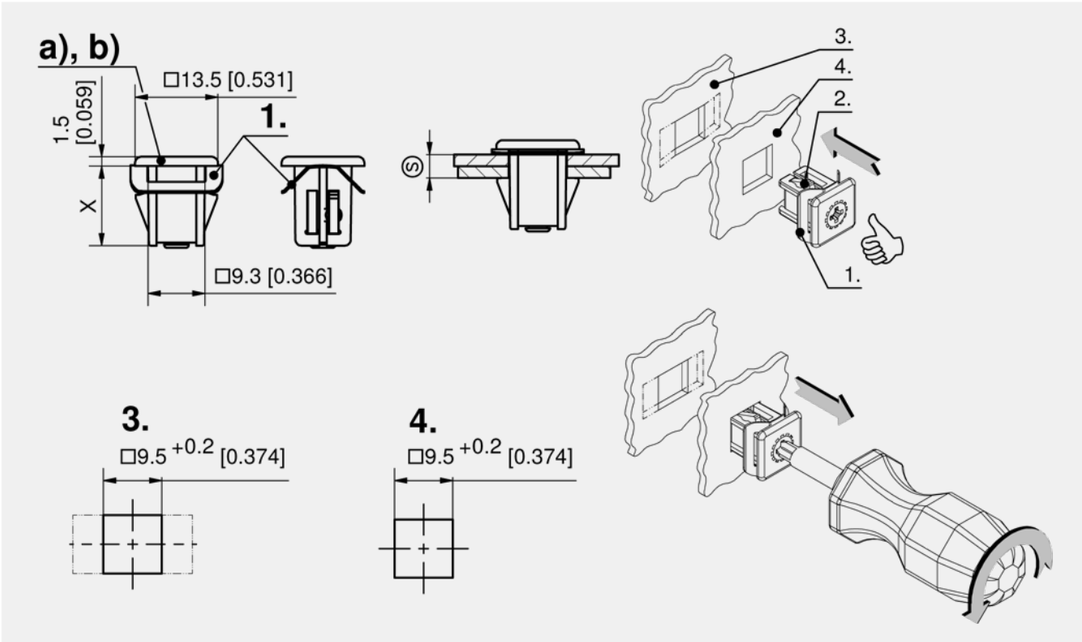

Fastener with insert Phillips H2, with leaf spring

	Part Number	Clamping range (S)	Dimension X	Installation type	Delivery Unit
a)	294-9113.00-00017	1.5 - 2.0 mm	11 mm	tool-less	10 pcs.
a)	294-9113.00-00026	2.5 - 2.8 mm	11 mm	tool-less	10 pcs.
a)	294-9113.00-00030	2.9 - 3.2 mm	11 mm	tool-less	10 pcs.
a)	294-9113.00-00034	3.3 - 3.6 mm	11 mm	tool-less	10 pcs.
a)	294-9113.00-00042	4.1 - 4.4 mm	11 mm	tool-less	10 pcs.
b)	294-9119.00-00037	3.5 - 4.0 mm	13 mm	tool-less	10 pcs.
b)	294-9119.00-00046	4.5 - 4.8 mm	13 mm	tool-less	10 pcs.
b)	294-9119.00-00050	4.9 - 5.2 mm	13 mm	tool-less	10 pcs.
b)	294-9119.00-00054	5.3 - 5.6 mm	13 mm	tool-less	10 pcs.
b)	294-9119.00-00062	6.1 - 6.4 mm	13 mm	tool-less	10 pcs.

all product details ▸ on DIRAK.com
1-041.05DST

DST Captive Fastener □ 9.5

[1-041.06DST]

DST

DIN 61373

RoHS WEEE

Advantages

- With DIRAK-SNAP-Technology for joining of flat metal sheets and securely latching doors and covers.
- For cutout □ 9.5.
- Meets machinery directive 2006/42EC.
- After pre-assembly no losing, dropping or misplacing possible.
- Held securely in the cutout.
- Seismic-proof according to GR-63-CORE, Issue 4.
- Vibration-proof according to DIN EN 61373.
- Tool-less installation.
- Operation by Phillips H2, opening by a ¼ turn of the insert.
- One-piece.

Materials

- **Housing:** zinc die, untreated
- **SNAP wedges:** sintered steel, zinc plated
- **Insert:** aluminum, hardened
- **Springs:** spring steel

Remarks

Removal: by turning the screw-driver counterclockwiese, the SNAP wedges (3.) are retracted. The leaf spring (1.) pushes the fastener out of the rear panel, however, the U-shaped spring (2.) holds the fastener captive in the front panel. (4.) Cutout in the rear panel can also be an ablong hole for tolerance adjustment. (5.) Cutout front panel.

The (S) dimension indicates the total thickness of the sheet metal panels.

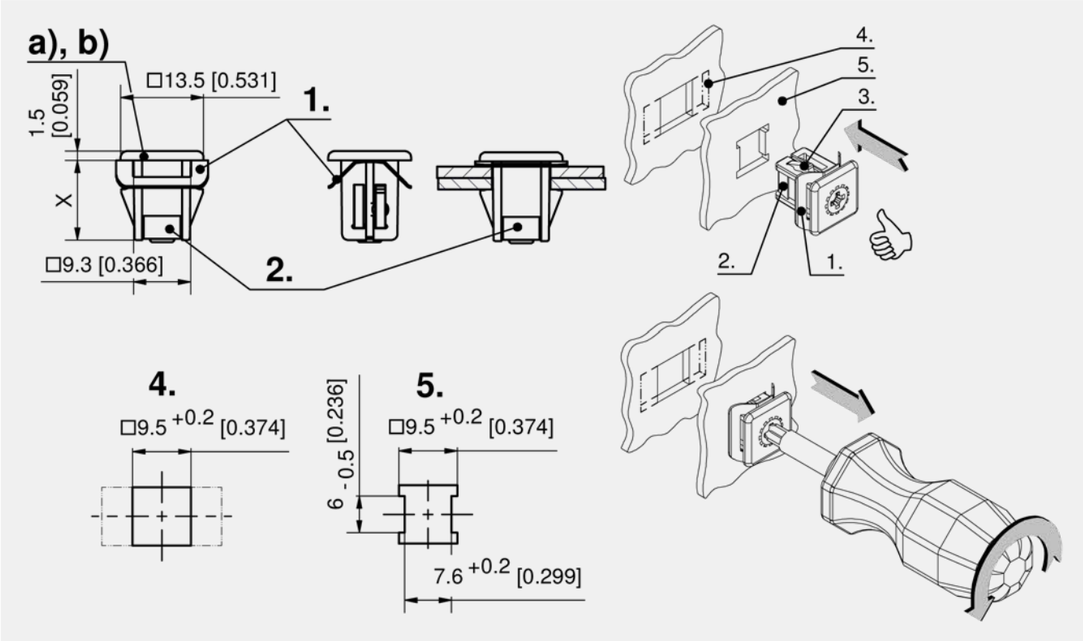

Fastener with insert Phillips H2

	Part Number	Clamping range (S)	Dimension X	Installation type	Delivery Unit
a)	294-9112.00-00017	1.5 - 2.0 mm	11 mm	tool-less	10 pcs.
a)	294-9112.00-00026	2.5 - 2.8 mm	11 mm	tool-less	10 pcs.
a)	294-9112.00-00030	2.9 - 3.2 mm	11 mm	tool-less	10 pcs.
a)	294-9112.00-00034	3.3 - 3.6 mm	11 mm	tool-less	10 pcs.
a)	294-9112.00-00042	4.1 - 4.4 mm	11 mm	tool-less	10 pcs.
b)	294-9118.00-00037	3.5 - 4.0 mm	13 mm	tool-less	10 pcs.
b)	294-9118.00-00046	4.5 - 4.8 mm	13 mm	tool-less	10 pcs.
b)	294-9118.00-00050	4.9 - 5.2 mm	13 mm	tool-less	10 pcs.
b)	294-9118.00-00054	5.3 - 5.6 mm	13 mm	tool-less	10 pcs.
b)	294-9118.00-00062	6.1 - 6.4 mm	13 mm	tool-less	10 pcs.

◂ all product details on DIRAK.com
1-041.06DST

DST Captive Fastener □ 12.7

[1-041.02DST]

DST

DIN 61373

RoHS WEEE

Advantages

- With DIRAK-SNAP-Technology for joining of flat metal sheets and securely latching doors and covers.
- For cutout □ 12.7.
- Meets machinery directive 2006/42EC.
- After pre-assembly no losing, dropping or misplacing possible.
- Vibration-proof according to DIN EN 61373.
- Seismic-proof according to GR-63-CORE, Issue 4.
- Tool-less installation.
- Operation by Phillips H2, opening by a ¼ turn of the insert.
- The joining of metal sheets is achieved by pressing the fastener into the cutouts.

Materials

- **Housing:** zinc die, untreated
- **Snap wedges:** sintered steel, zinc plated
- **Insert:** aluminum, hardened
- **Springs:** spring steel

Remarks

Removal: by turning the screw-driver counterclockwise, the SNAP wedges (3.) are retracted. The leaf spring (1.) pushes the fastener out of the rear panel, however, the U-shaped spring holds the fastener captive in the front panel. (4.) Cutout in the rear panel can also be an olong hole for tolerance adjustment. (5.) Cutout front panel. The (S) dimension indicates the total thickness of the sheet metal panels.

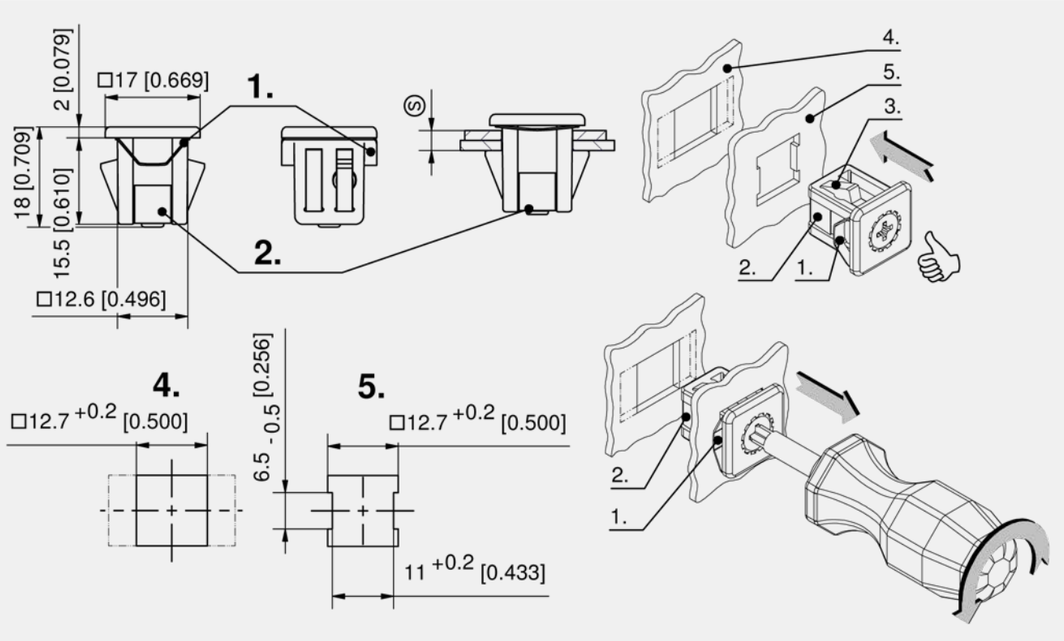

Fastener with insert Phillips H2

Part Number	Clamping range (S)	Installation type	Delivery Unit
294-9103.00-00021	1.4 - 1.9 mm	tool-less	10 pcs.
294-9103.00-00031	2.4 - 2.9 mm	tool-less	10 pcs.
294-9103.00-00036	2.9 - 3.4 mm	tool-less	10 pcs.
294-9103.00-00041	3.4 - 3.9 mm	tool-less	10 pcs.
294-9103.00-00046	3.9 - 4.4 mm	tool-less	10 pcs.
294-9103.00-00056	4.9 - 5.4 mm	tool-less	10 pcs.
294-9103.00-00061	5.4 - 5.9 mm	tool-less	10 pcs.
294-9103.00-00066	5.9 - 6.4 mm	tool-less	10 pcs.

all product details ▸ on DIRAK.com
1-041.02DST

DST Captive Fastener □ 18.7

[1-041.09DST]

Advantages

- With DIRAK-SNAP-Technology for joining of flat metal sheets and securely latching doors and covers.
- For cutout □ 18.7.
- Meets machinery directive 2006/42EC.
- After pre-assembly the concern of losing, dropping or misplacing hardware is eliminated.
- Vibration-proof.
- Tool-less installation.
- Pressed into the front panel (sheet thickness max. 3mm) and permanently secured by the U-shaped spring (1.).
- Can be disconnected from the rear panel from the front with the tool for uninstallation 292-0312.83-00000.
- One-piece.

Materials

- **Housing and Snap wedges:** zinc die, zinc plated
- **U-shaped spring:** AISI 301

Remarks

2. installation

3. installed

4. removal

Removal: by turning the tool for uninstallation counter clockwise the SNAP wedges are drawn back. The U-shaped spring holds the fastener captive in the front panel.

Oblong hole possible in the rear panel, for tolerance adjustment.

The (S) dimension indicates the total thickness of the sheet metal panels.

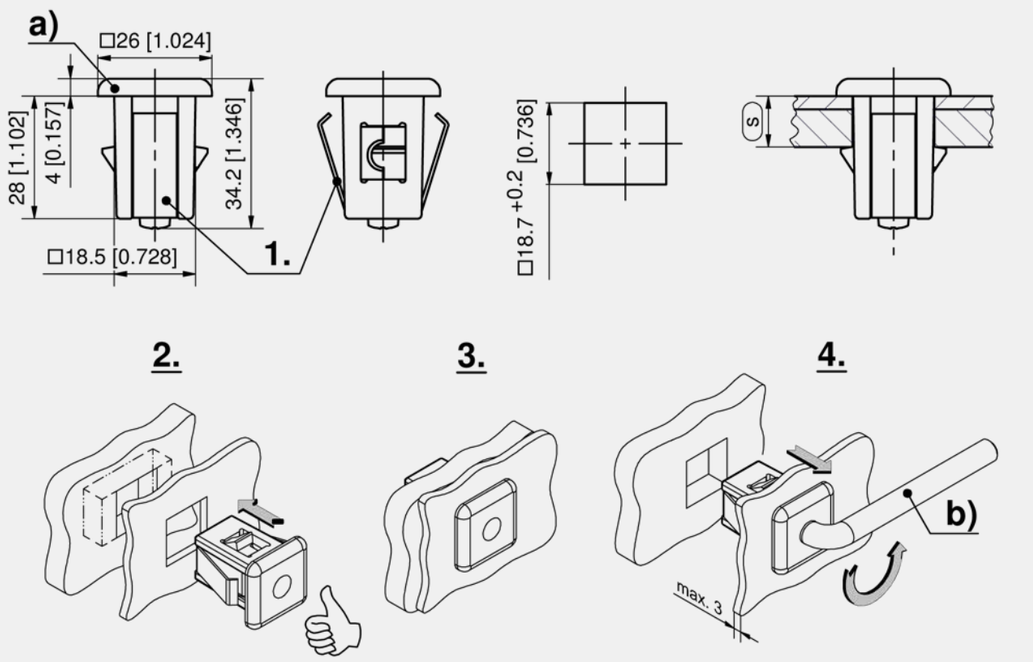

Fastener

	Part Number	Clamping range (S)	Installation type	Delivery Unit
a)	294-8004.00-00001	11.5 - 11.8 mm	tool-less	10 pcs.

	Accessories
b) 764	292-0312.83-00000 **Tool for uninstallation**

all product details on DIRAK.com
1-041.09DST

DST Fastener 8x15

[1-040DST]

Advantages

- With DIRAK-SNAP-Technology for joining metal sheets.
- For cutout 8x15.
- Vibration-proof.
- Tool-less installation.
- The joining of metal sheets is achieved by pressing the fastener into the cutouts.
- With tool Part-No.: 292-0302.70 this fastener can be disconnected both from inside (after removal of the red plug) and from the outside.
- The tool is captive in the open position.

Materials

- **Housing:** PA, black or light grey, RAL 7035
- **Snap wedges:** Grivory, black

Remarks

1. installation

2. disassembly

3. disassemble red plug

The dimension (S) always means the thickness of both sheets e.g.:

1.5 + 1.5 = 3

2.0 + 1.0 = 3

2.0 + 2.0 = 4

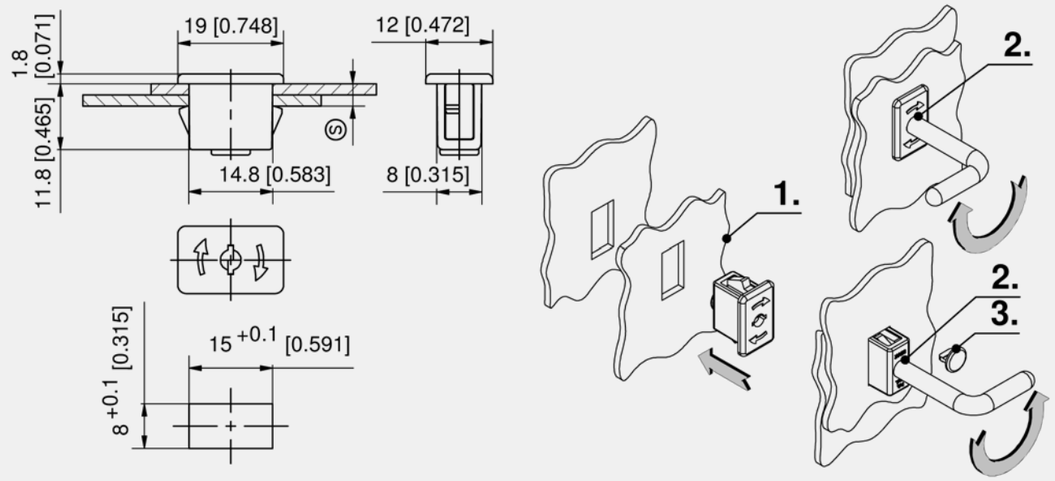

Fastener, PA

Part Number	Surface	Clamping range (S)	Installation type	Delivery Unit
294-9001.00-00015	black	1.5 - 1.8 mm	tool-less	10 pcs.
294-9001.00-00020	black	2.0 - 2.3 mm	tool-less	10 pcs.
294-9001.00-00030	black	3.0 - 3.3 mm	tool-less	10 pcs.
294-9001.00-00040	black	4.0 - 4.3 mm	tool-less	10 pcs.
294-9002.00-00015	light grey RAL 7035	1.5 - 1.8 mm	tool-less	10 pcs.
294-9002.00-00020	light grey RAL 7035	2.0 - 2.3 mm	tool-less	10 pcs.
294-9002.00-00030	light grey RAL 7035	3.0 - 3.3 mm	tool-less	10 pcs.
294-9002.00-00040	light grey RAL 7035	4.0 - 4.3 mm	tool-less	10 pcs.

	Accessories
764	292-0302.70-00000 **Tool for uninstallation**

all product details on DIRAK.com
1-040DST

DST Fastener 30x10

[1-042DST]

Advantages

- With DIRAK-SNAP-Technology for joining flat metal sheets.
- For cutout 30x10.
- Tool-less installation.
- Simple clip-in into its cutouts.
- Vibration-proof.

Materials

- **Housing:** zinc die, black
- **Snap wedges:** sintered steel, zinc plated

Remarks

1. installation

The (S) dimension indicates the total thickness of the sheet metal panels.

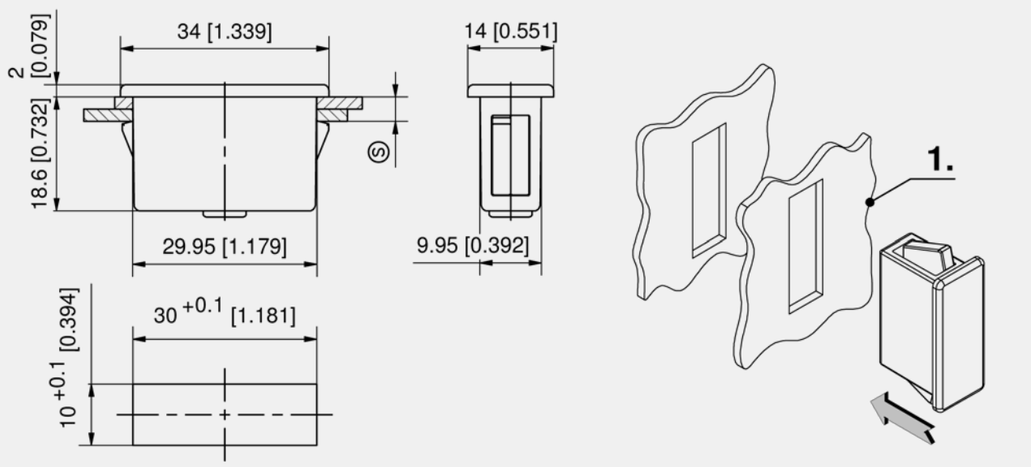

Fastener

Part Number	Clamping range (S)	Installation type	Delivery Unit
294-9106.00-00040	3.7 - 4.2 mm	tool-less	10 pcs.
294-9106.00-00045	4.2 - 4.7 mm	tool-less	10 pcs.
294-9106.00-00050	4.7 - 5.2 mm	tool-less	10 pcs.
294-9106.00-00055	5.2 - 5.7 mm	tool-less	10 pcs.
294-9106.00-00060	5.7 - 6.2 mm	tool-less	10 pcs.
294-9106.00-00080	7.7 - 8.2 mm	tool-less	10 pcs.

	Accessories
764	292-0306.80-02530 **Tool for uninstallation**
762	292-0401.00-03010 **Cutout-cover**
763	292-0702.15-01030 **Reinforcement plate for cutout**

1-042DST

◂ all product details on DIRAK.com

DST Fastener 30x14

[1-043DST]

Advantages

- With DIRAK-SNAP-Technology for joining flat metal sheets.
- For cutout 30x14.
- Tool-less installation.
- Simple clip-in into its cutouts.
- The riveted grounding clip assures an electrical connection between the sheets and the fastener itself.
- Seismic-proof according to GR-63-CORE, Issue 4.
- Vibration-proof according to DIN EN 61373.
- The teeth of the riveted grounding clip penetrate the painted edge of the cutouts.
- By using the tool for uninstallation 292-0311.15 a disassembly from the front is possible.

Materials

- **Housing:** zinc die, black
- **Snap wedges:** sintered steel, zinc plated
- **Grounding clip:** stainless steel

Remarks

1. and 2. uninstallation

3. grounding clip

The (S) dimension indicates the total thickness of the sheet metal panels

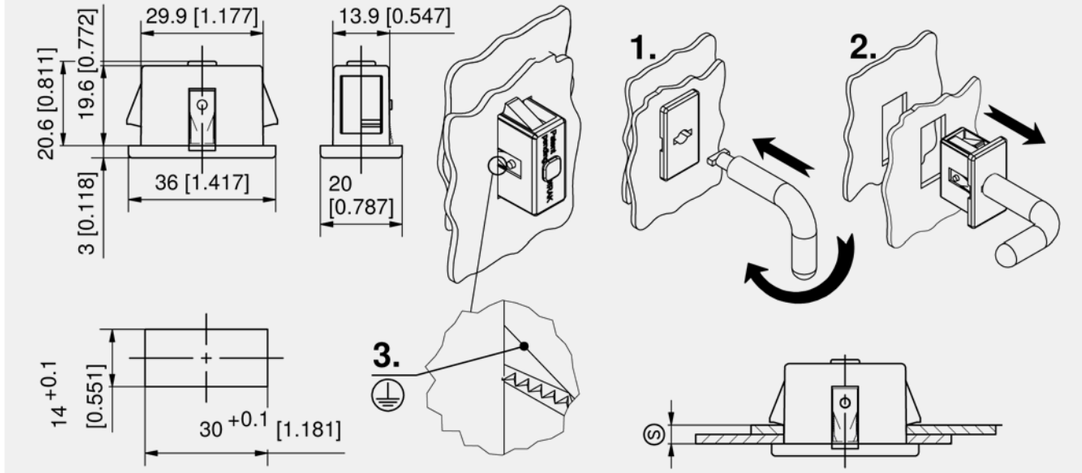

Fastener

Part Number	Clamping range (S)	Installation type	Delivery Unit
294-9003.00-00034	3.0 - 3.7 mm	tool-less	10 pcs.
294-9003.00-00043	4.0 - 4.5 mm	tool-less	10 pcs.
294-9003.00-00052	5.0 - 5.5 mm	tool-less	10 pcs.
294-9003.00-00063	6.0 - 6.5 mm	tool-less	10 pcs.

	Accessories
764	292-0311.15-00000 **Tool for uninstallation**
762	292-0402.00-03014 **Cutout-cover**

all product details ▸ on DIRAK.com

1-043DST

DST DUAL Fastener 30x10

[1-044DST]

DST

RoHS WEEE

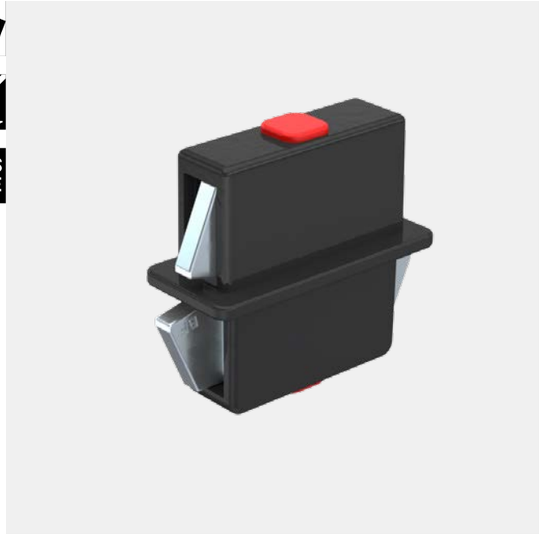

Advantages

- With DIRAK-SNAP-Technology for joining flat metal sheets.
- For cutout 30x10.
- Tool-less installation.
- In order to provide a tolerance for installation, one half of the housing is just 28mm long.
- Vibration-proof.

Materials

- **Housing:** zinc die, black or PA black
- **Snap wedges:** sintered steel, zinc plated

Remarks

1. installation

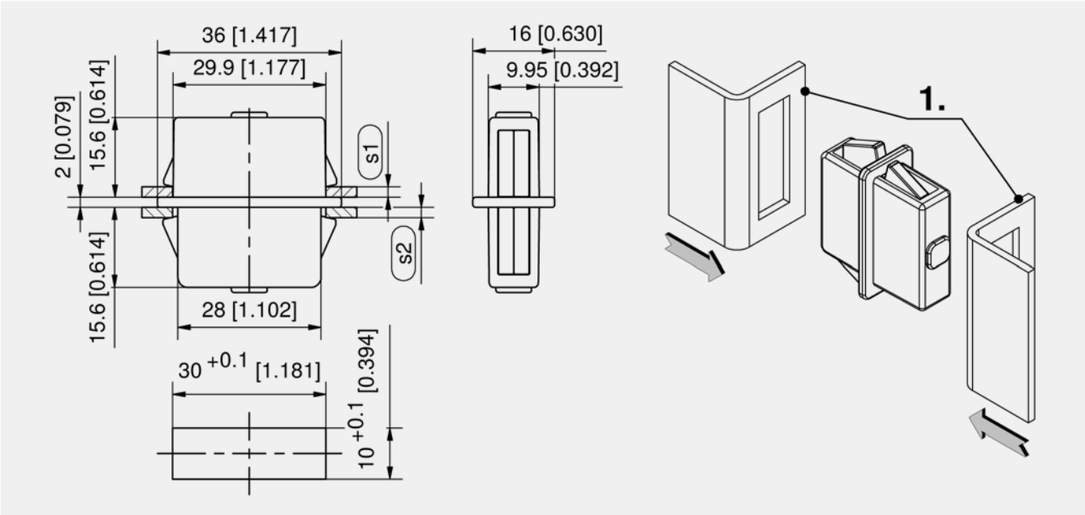

Fastener, black

Part Number	Material	Clamping range (S)	Clamping range (S) 2	Installation type	Delivery Unit
294-9102.52-10010	PA	0.7 - 1.2 mm	0.7 - 1.2 mm	tool-less	10 pcs.
294-9102.52-20020	PA	1.7 - 2.2 mm	1.7 - 2.2 mm	tool-less	10 pcs.
294-9102.52-15015	PA	1.2 - 1.7 mm	1.2 - 1.7 mm	tool-less	10 pcs.
294-9102.52-25025	PA	2.2 - 2.7 mm	2.2 - 2.7 mm	tool-less	10 pcs.
294-9102.52-30030	PA	2.7 - 3.2 mm	2.7 - 3.2 mm	tool-less	10 pcs.
294-9107.33-10010	zinc die	0.7 - 1.2 mm	0.7 - 1.2 mm	tool-less	10 pcs.
294-9107.33-15015	zinc die	1.2 - 1.7 mm	1.2 - 1.7 mm	tool-less	10 pcs.
294-9107.33-20020	zinc die	1.7 - 2.2 mm	1.7 - 2.2 mm	tool-less	10 pcs.
294-9107.33-25025	zinc die	2.2 - 2.7 mm	2.2 - 2.7 mm	tool-less	10 pcs.
294-9107.33-30030	zinc die	2.7 - 3.2 mm	2.7 - 3.2 mm	tool-less	10 pcs.

	Accessories
764	292-0306.80-02530 **Tool for uninstallation**
762	292-0401.00-03010 **Cutout-cover**
763	292-0702.15-01030 **Reinforcement plate for cutout**

1-044DST

all product details on DIRAK.com

Hinges Pr01 180° with Grounding Countersunk Screw

See from page 509–510

Grounding Countersunk Screw

See page 752

Fastening Technology

DST Fastener 30x10 Stainless Steel

[7-913DST]

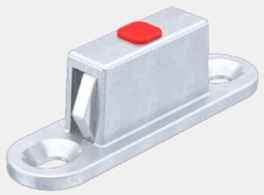

Advantages

- With DIRAK-SNAP-Technology for a one-sided fixed and a one-sided detachable connection.
- For cutout 30x10.
- The width of the cutout can be enlarged for adjusting.
- Installation in closed profiles.
- Various fastening options e.g. with countersunk screws.
- The fastener can be installed in a recessed mounting position for flush applications.

Materials

- **Fastener and snap wedges:** AISI 304

Remarks

F = pull-off force

1. cutout for detachable side / tolerance dimension

2. e.g. sheet metal

3. e.g. wood

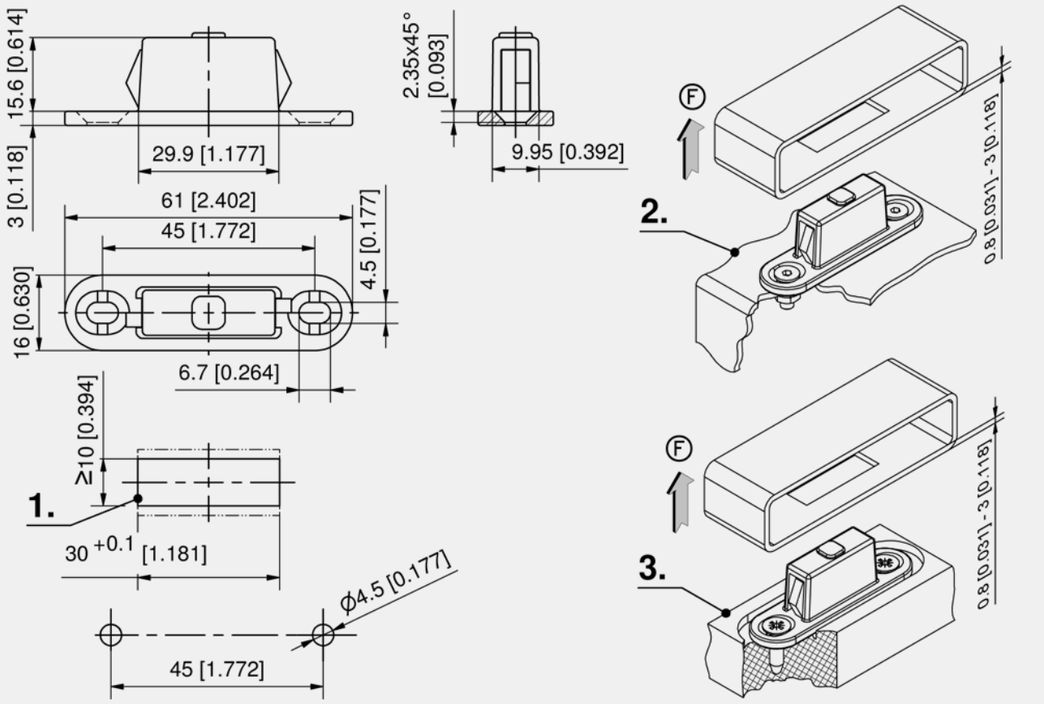

Fastener

Part Number	Version	Pull-off force	Clamping range (S)	Countersunk screws	Installation type	Delivery Unit
295-9003.00-00005	one removable side	~50N	0.8 - 3.0 mm	for Ø4.5mm hole diameter	tool-less / screw-on	10 pcs.

7-913DST

◂ all product details on DIRAK.com

DST Fastener 30x10

[1-046DST]

Advantages

- With DIRAK-SNAP-Technology for a one-sided fixed and a one-sided detachable connection.
- For cutout 30x10.
- The width of the cutout can be enlarged for adjusting.
- Blind assembly in closed profiles.
- Vibration-proof.
- The fastener can be screwed on for flush applications in a recess (metal sheet / wood)

Materials

- **Fastener:** zinc die, black
- **Snap wedges:** sintered steel, zinc plated

Remarks

F = pull-off force

Fastening with countersunk screws M4 or wood screws.

1. cutout for detachable side / tolerance dimension

2. e.g. sheet metal

3. e.g. wood

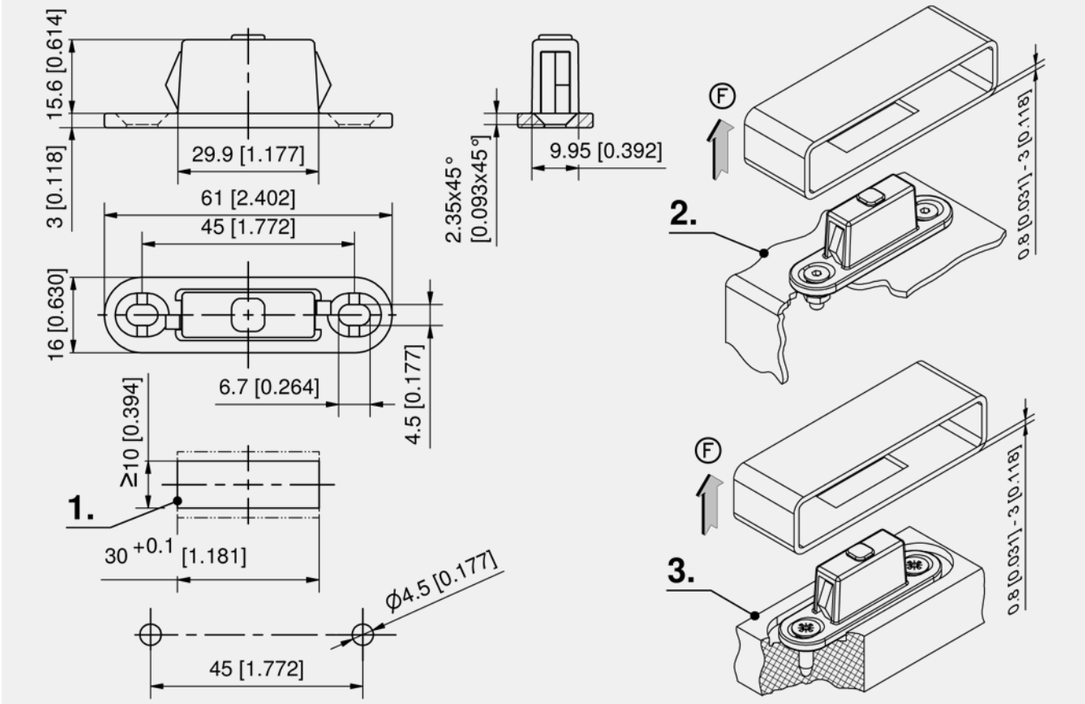

Fastener

Part Number	Clamping range (S)	Pull-off force	Installation type	Delivery Unit
295-9002.00-00001	0.8 - 3.0 mm	~15N	tool-less / screw-on	10 pcs.
295-9002.00-00003	0.8 - 3.0 mm	~30N	tool-less / screw-on	10 pcs.
295-9002.00-00005	0.8 - 3.0 mm	~50N	tool-less / screw-on	10 pcs.

all product details ▸ on DIRAK.com

1-046DST

DST DUAL Fastener 30x10

[1-045DST]

DST

RoHS WEEE

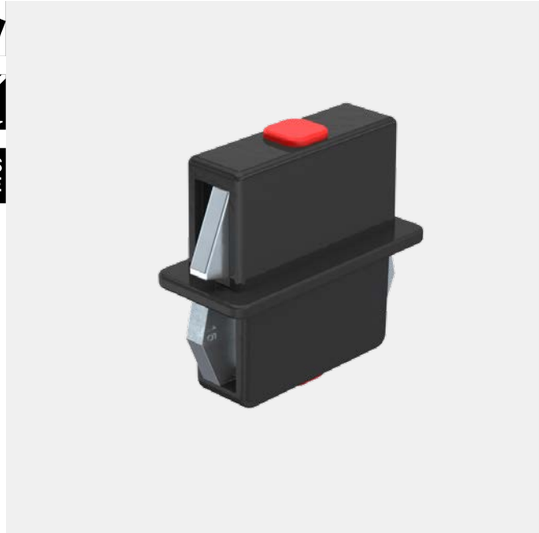

Advantages

- With DIRAK-SNAP-Technology has one fixed side and one detachable side.
- Application for double-walled or bended non-sealed doors and side panels.
- The cutout for the fixed side is 30x10mm.
- For the detachable side a cut-out of 28x10mm to 30x16mm is possible.
- Tool-less installation.
- Vibration-proof.
- The DUAL fastener keep the door in position and prevent vibration of the door.

Materials

- **Dual Fastener:** PA, black or zinc die, black
- **Snap wedges:** sintered steel, zinc plated

Remarks

1. installed
2. removed
3. cutout for fixed side
4. cutout for detachable side / tolerance dimension
5. possible misalignment of the 2 cutouts

The sheet thicknesses (S) can be designed differently.

F = pull-off force

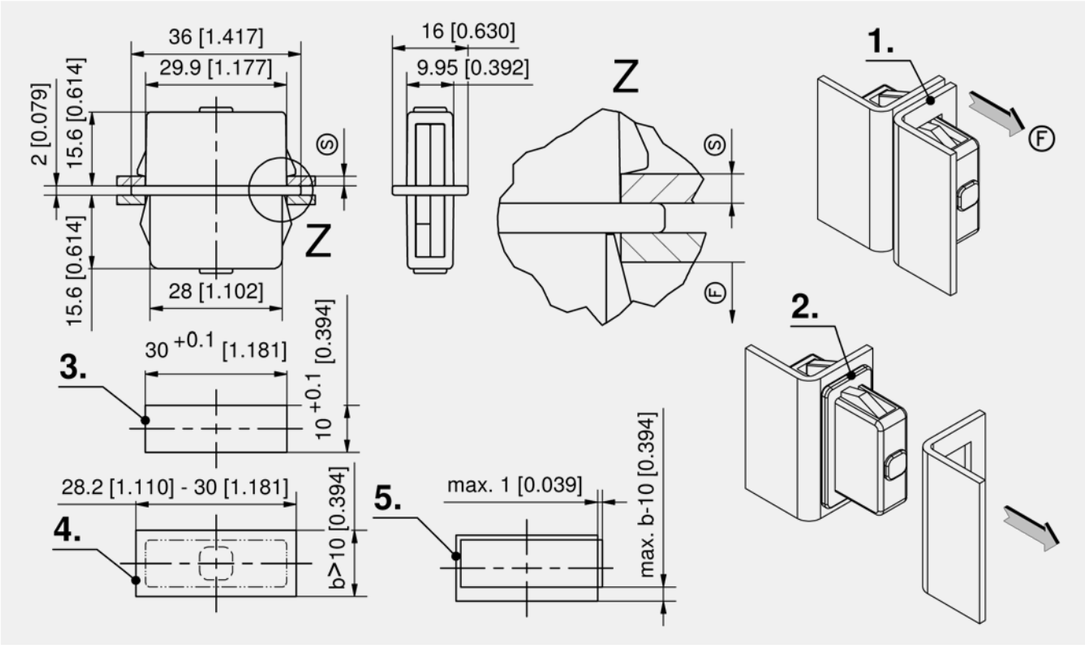

Fastener, zinc die, black

Part Number	Clamping range (S)	Pull-off force	Installation type	Delivery Unit
295-9001.33-10001	0.7 - 1.2 mm	~15N	tool-less	10 pcs.
295-9001.33-10003	0.7 - 1.2 mm	~30N	tool-less	10 pcs.
295-9001.33-10005	0.7 - 1.2 mm	~50N	tool-less	10 pcs.
295-9001.33-15001	1.2 - 1.7 mm	~15N	tool-less	10 pcs.
295-9001.33-15003	1.2 - 1.7 mm	~30N	tool-less	10 pcs.
295-9001.33-15005	1.2 - 1.7 mm	~50N	tool-less	10 pcs.
295-9001.33-20001	1.7 - 2.2 mm	~15N	tool-less	10 pcs.
295-9001.33-20003	1.7 - 2.2 mm	~30N	tool-less	10 pcs.
295-9001.33-20005	1.7 - 2.2 mm	~50N	tool-less	10 pcs.
295-9001.33-25001	2.2 - 2.7 mm	~15N	tool-less	10 pcs.
295-9001.33-25003	2.2 - 2.7 mm	~30N	tool-less	10 pcs.
295-9001.33-25005	2.2 - 2.7 mm	~50N	tool-less	10 pcs.
295-9001.33-30001	2.7 - 3.2 mm	~15N	tool-less	10 pcs.
295-9001.33-30003	2.7 - 3.2 mm	~30N	tool-less	10 pcs.
295-9001.33-30005	2.7 - 3.2 mm	~50N	tool-less	10 pcs.

Fastener, PA, black

Part Number	Clamping range (S)	Pull-off force	Installation type	Delivery Unit
295-9001.52-10001	0.7 - 1.2 mm	~15N	tool-less	10 pcs.
295-9001.52-10003	0.7 - 1.2 mm	~30N	tool-less	10 pcs.
295-9001.52-10005	0.7 - 1.2 mm	~50N	tool-less	10 pcs.
295-9001.52-15001	1.2 - 1.7 mm	~15N	tool-less	10 pcs.
295-9001.52-15003	1.2 - 1.7 mm	~30N	tool-less	10 pcs.
295-9001.52-15005	1.2 - 1.7 mm	~50N	tool-less	10 pcs.
295-9001.52-20001	1.7 - 2.2 mm	~15N	tool-less	10 pcs.
295-9001.52-20003	1.7 - 2.2 mm	~30N	tool-less	10 pcs.
295-9001.52-20005	1.7 - 2.2 mm	~50N	tool-less	10 pcs.
295-9001.52-25001	2.2 - 2.7 mm	~15N	tool-less	10 pcs.
295-9001.52-25003	2.2 - 2.7 mm	~30N	tool-less	10 pcs.
295-9001.52-25005	2.2 - 2.7 mm	~50N	tool-less	10 pcs.
295-9001.52-30001	2.7 - 3.2 mm	~15N	tool-less	10 pcs.
295-9001.52-30003	2.7 - 3.2 mm	~30N	tool-less	10 pcs.
295-9001.52-30005	2.7 - 3.2 mm	~50N	tool-less	10 pcs.

	Accessories
764	292-0306.80-02530 **Tool for uninstallation**
762	292-0401.00-03010 **Cutout-cover**
763	292-0702.15-01030 **Reinforcement plate for cutout**

1-045DST

all product details on DIRAK.com

Cage Nut □ 9.5

[6-045]

Advantages

- Impossible to rotate nut and cage.
- Can be installed in the cutout without tools from the front as well as from behind.
- Cage made of PA is flexible and thus easy to install.
- Secure fit of the cage in the cutout through fitted square.
- Seismic-proof according to GR-63-CORE, Issue 4.
- Vibration-proof according to DIN EN 61373.
- Clamping range 1-4mm.
- For cutouts □ 9.5 and □ 9.2mm.
- Suitable for high torque and high tensile forces of up to 8 nm.

Materials

- **Cage:** PA, black
- **Nut:** steel, zinc plated white

Remarks

Installation description (1. - 6.) see www.DIRAK.com

a) + b) configure the cage a) with the nut b).

c) cages and nuts are packed pre-assembled per 100 in a bag.

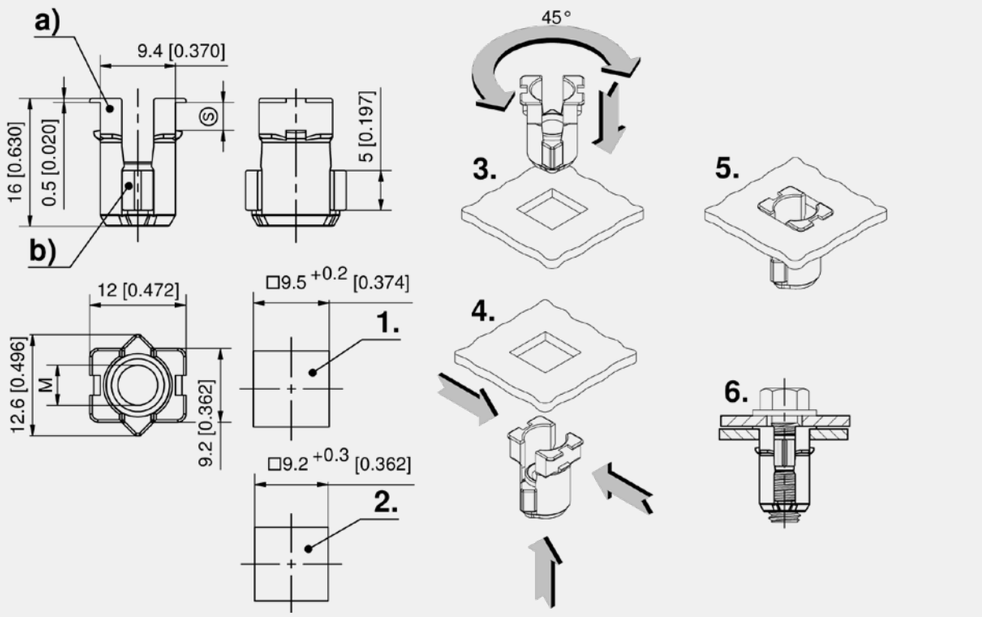

Cage nut, unmounted

	Part Number	Name	Clamping range (S)	Delivery Unit
a)	203-1901.06-00095	Cage for Nut	1 - 4 mm	2000 pcs.
b)	203-1902.15-00006	Nut M6		2000 pcs.

Cage nut, pre-assembled

	Part Number	Thread size	Clamping range (S)	Delivery Unit
c)	203-9002.00-00000	M6	1 - 4 mm	100 pcs.

6-045
◂ all product details on DIRAK.com

Grounding Cage Nut □ 9.5

[6-046]

Advantages

- For the secure joining of metal sheets.
- With grounding nut M6.
- Tested according DIN EN 61439-1 (VDE 0660 part 600): 2012-06.
- Can be installed in the cutout without tools from the front as well as from behind.
- Secure fit of the cage in the cutout though fitted square.
- For cutouts □ 9.5 and □ 9.2mm.
- Suitable for high torque and high tensile force from 3 up to 8 nm.
- Cage and grounding nut packed in bulk.

Materials

- **Cage:** PA, black
- **Grounding nut:** steel, zinc plated white

Remarks

Installation description (1. - 7.) see www.DIRAK.com

Attention: The contact points must be designed in such a way that the contact pressure will not be transferred through the PA cage.

Configure the cage a) with the grounding nut b).

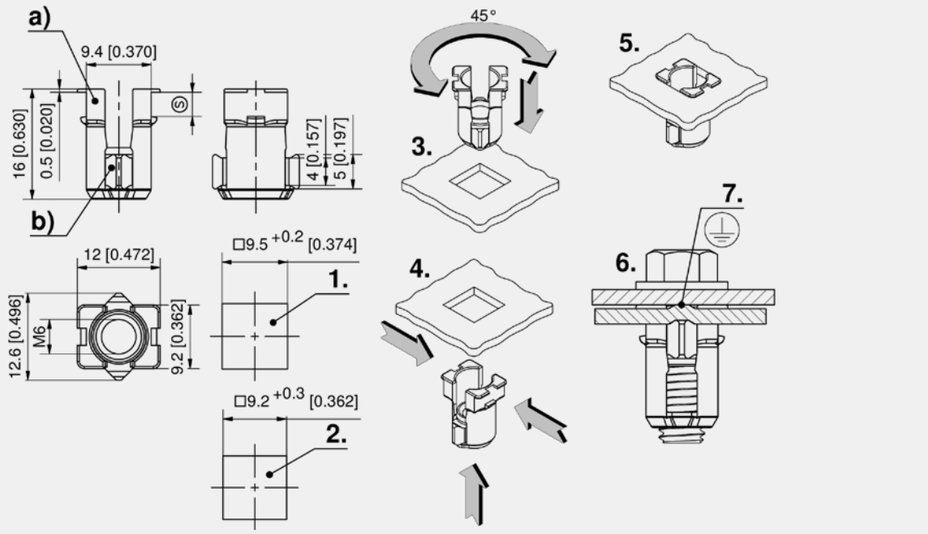

Cage nut, unmounted

	Part Number	Name	Clamping range (S)	Delivery Unit
a)	203-1901.06-00095	Cage for Nut	1 - 4 mm	2000 pcs.
b)	203-1904.15-00006	Grounding nut M6		2000 pcs.

all product details ▸ on DIRAK.com
6-046

Cage Nuts □ 9.5

[6-045.01]

DIN 61373

RoHS WEEE

Advantages

- Ensures fixed connection of two metal sheets.
- Easy installation by pressing in square cutouts.
- Nut is moveable and adjustable in the cage until final fixing by screw.
- Seismic-proof according to GR-63-CORE, Issue 4.
- Vibration-proof according to DIN EN 61373.

Materials

- **Cage:** steel, zinc plated or stainless steel AISI 304
- **Nut:** steel, zinc plated or stainless steel AISI 316

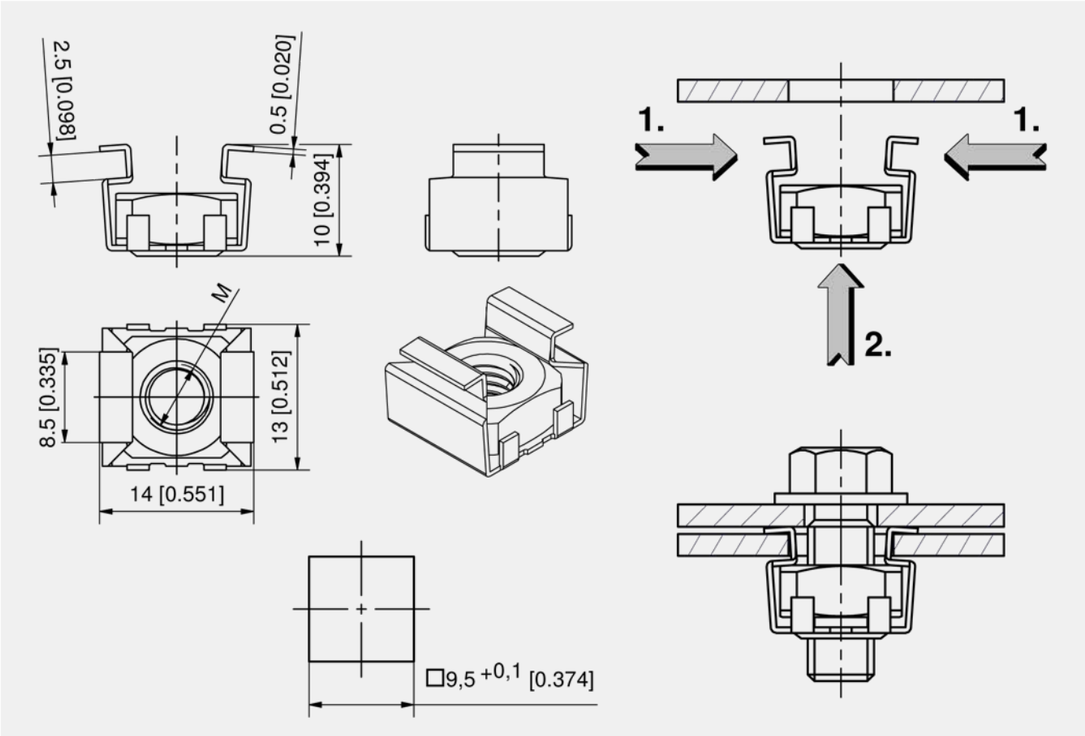

Cage nuts

Part Number	Thread size	Material	Surface	Delivery Unit
359-0250.06-00000	M5	steel	zinc plated	200 pcs.
353-2010.00-00000	M5	AISI 304		200 pcs.
359-0206.06-00000	M6	steel	zinc plated	200 pcs.

6-045.01

all product details on DIRAK.com

DIRAK

Grounding Cage Nut □ 9,5

See page 747

Fastening Technology

Cage Nuts

[6-045.02]

DIN 61373

RoHS WEEE

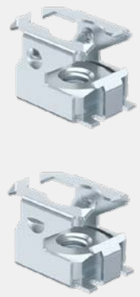

Advantages

- Ensures fixed connection of two metal sheets.
- Easy installation by pressing into square cutouts.
- Nut is moveable and adjustable in the cage until final fixing by screw.
- c) and d) special design of the cage prevents from falling out of the cutout.
- Seismic-proof according to GR-63-CORE, Issue 4.
- Vibration-proof according to DIN EN 61373.

Materials

- **Cage and nut:** steel, zinc plated

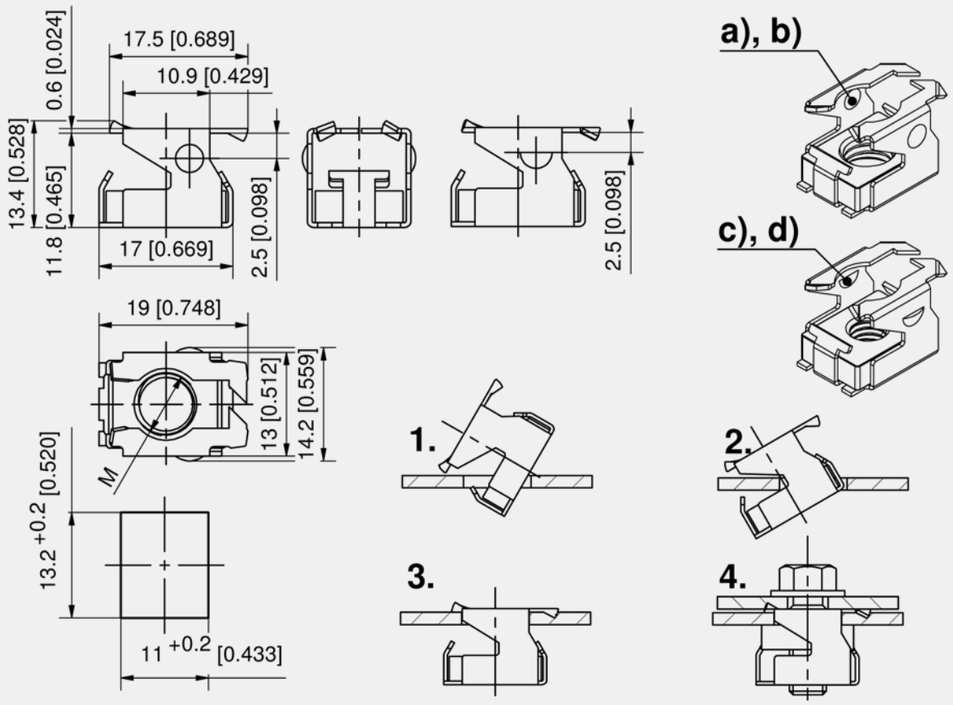

Cage nuts

	Part Number	Thread size	Delivery Unit
a)	350-2004.00-00000	M8	200 pcs.
b)	350-2005.00-00000	M6	200 pcs.
c)	350-2046.00-00000	M6	200 pcs.
d)	350-2096.00-00000	1/4-20UNC	200 pcs.

6-045.02
all product details on DIRAK.com

Screw Assembly for Terminal Box Cover

[6-043]

IP 66

RoHS WEEE

Advantages

- Screw assembly consists of raised countersunk M5x30 Phillips H2 screw and sleeve.
- Meets IP66 certification (applicable for installation example shown below with even compression of the foam/glued seal).
- Captive by using o-ring 839-3770.00-00412.

Materials

- **Screw:** steel, zinc plated
- **Sleeve:** PA, black
- **O-ring:** NBR, black

Remarks

Additional lengths and materials of the screw available on request.

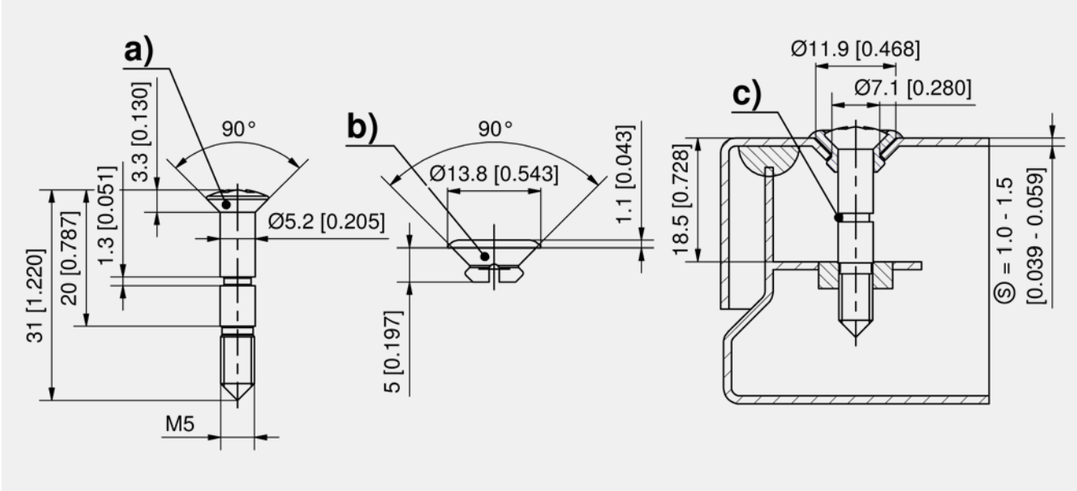

Screw assembly

	Part Number	Name	Material	Surface	Delivery Unit
a)	202-1103.15-00530	Raised countersunk screw, M5x30	steel	zinc plated	50 pcs.
b)	203-0655.61-00000	Sleeve	TPV Santoprene	black	50 pcs.

+	Specific accessories
c)	839-3770.00-00412 **O-ring 4 x 1.2mm**

all product details on DIRAK.com
6-043

Grounding Countersunk Screw

[6-044]

RoHS WEEE

Vorteile

- Grounding is implemented by segment cutting edge (2.) or scraping tooth (3.).
- Tested according to DIN EN 61439-1 (VDE 0660 part 600): 2012-06 "Low Voltage Switchgear Combinations".
- Sliding coating ensures low screw-in torques.
- Hexagon socket drive in accordance with DIN EN ISO 10664 no. 30 (4.).
- DIRAK screws are shaped for applications without a nut thread so that they cut a metric nut thread.
- The counter thread is formed due to the non-circular cross-section and the slightly conical design.

Werkstoffe

- **Screw:** steel (10B21), strength 8.8 ISO898, zinc plated, sliding coated

Anmerkungen

Please request our data sheet with detailed technical information.

a) metric thread M6.

b) metric thread cutting screw M6 according to DIN 7500. (1.)

5. Embossing at a cylindrical hole for flush surface.

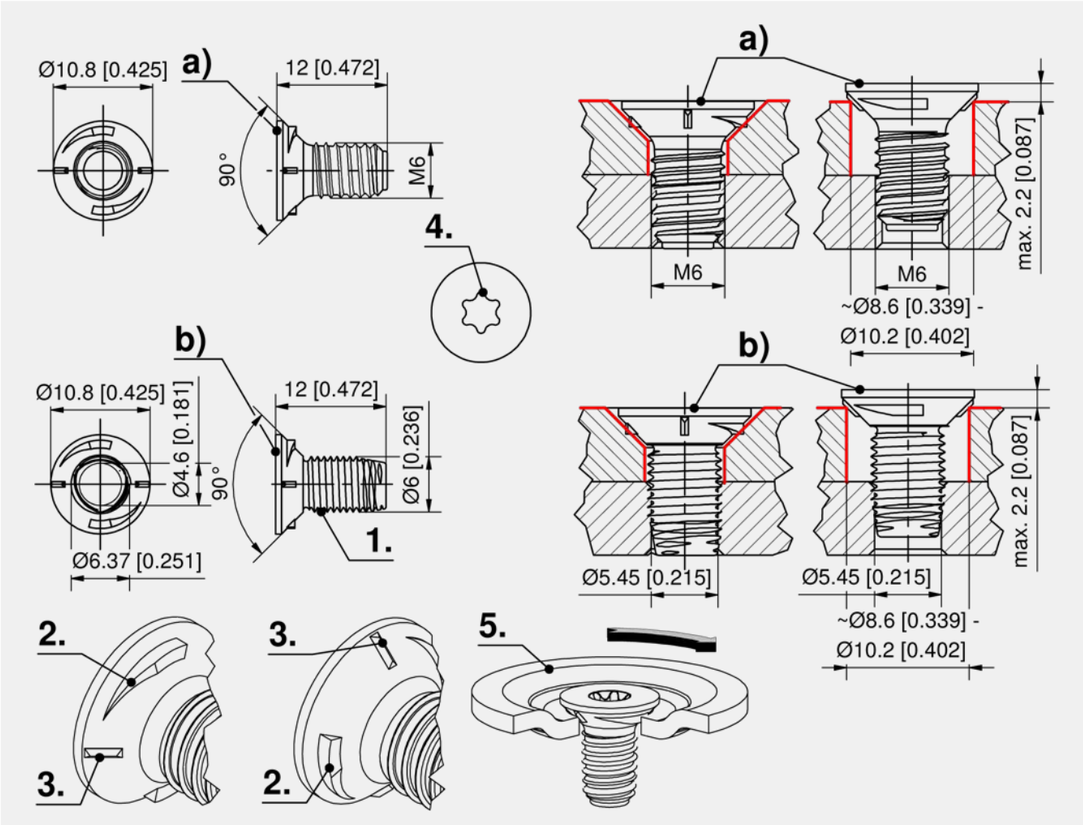

Grounding countersunk screws

	Part Number	Version	Dimension	Delivery Unit
a)	800-9001.00-00000	metric thread	M6 x 12	100 pcs.
b)	800-9002.00-00000	metric thread cutting	Ø6 x 12	100 pcs.

6-044

all product details on DIRAK.com

DIRAK

DST Captive Fastener

See page 735

Fastening Technology

Serrated Screws

[6-040]

RoHS WEEE

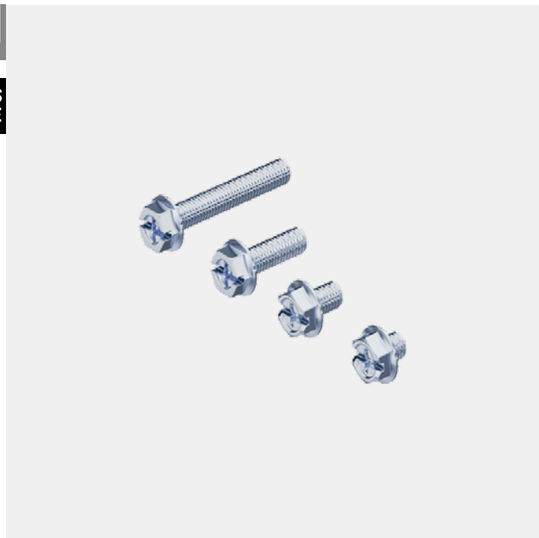

Advantages

- Serrated screw with under-head serrations with Phillips/ slot head.

Materials

- **Serrated screws:** steel, zinc plated property class 5.8 or AISI 304
- Versions with powder locking dot on request.

Remarks

202-0606.**04**-00000 = only available with hexagon head.

202-0635.00-00000 = as long as stock lasts, hexagon head property class 8.8.

1. version Phillips/ slot

2. version hexagon

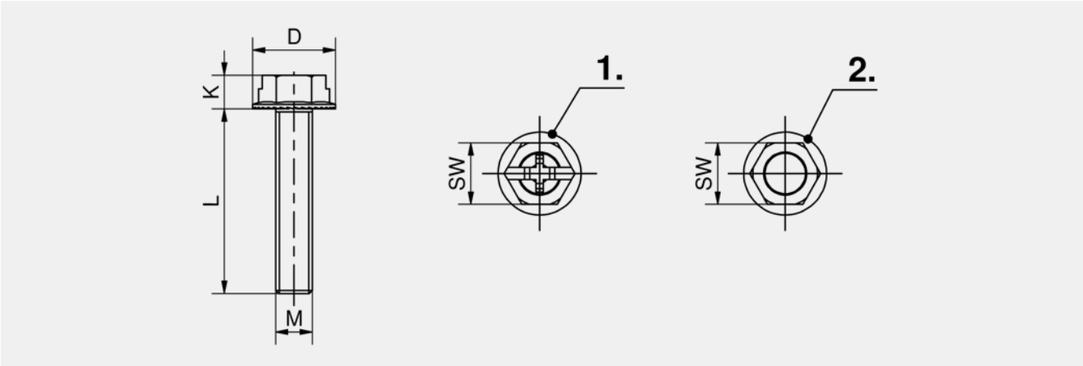

Serrated screws

Part Number	D	k	SW	L	Thread size	Material	Surface	Delivery Unit
202-0506.00-00000	10 mm	4.5 mm	8 mm	6 mm	M5	steel	zinc plated	200 pcs.
202-0508.00-00000	10 mm	4.5 mm	8 mm	8 mm	M5	steel	zinc plated	200 pcs.
202-0606.00-00000	13.5 mm	5.5 mm	10 mm	6 mm	M6	steel	zinc plated	200 pcs.
202-0607.00-00000	13.5 mm	5.5 mm	10 mm	7 mm	M6	steel	zinc plated	200 pcs.
202-0608.00-00000	13.5 mm	5.5 mm	10 mm	8 mm	M6	steel	zinc plated	200 pcs.
202-0610.00-00000	13.5 mm	5.5 mm	10 mm	10 mm	M6	steel	zinc plated	200 pcs.
202-0616.00-00000	13.5 mm	5.5 mm	10 mm	16 mm	M6	steel	zinc plated	200 pcs.
202-0620.00-00000	13.5 mm	5.5 mm	10 mm	20 mm	M6	steel	zinc plated	200 pcs.
202-0625.00-00000	13.5 mm	5.5 mm	10 mm	25 mm	M6	steel	zinc plated	200 pcs.
202-0630.00-00000	13.5 mm	5.5 mm	10 mm	30 mm	M6	steel	zinc plated	200 pcs.
202-0635.00-00000	13.5 mm	5.5 mm	10 mm	35 mm	M6	steel	zinc plated	200 pcs.
202-0640.00-00000	13.5 mm	5.5 mm	10 mm	40 mm	M6	steel	zinc plated	200 pcs.
202-0650.00-00000	13.5 mm	5.5 mm	10 mm	50 mm	M6	steel	zinc plated	200 pcs.
202-0810.00-00000	16.5 mm	7.5 mm	13 mm	10 mm	M6	steel	zinc plated	200 pcs.
202-0606.04-00000	13.5 mm	5.5 mm	10 mm	6 mm	M6	AISI 304	stainless steel	200 pcs.
202-0608.04-00000	13.5 mm	5.5 mm	10 mm	8 mm	M6	AISI 304	stainless steel	200 pcs.
202-0610.04-00000	13.5 mm	5.5 mm	10 mm	10 mm	M6	AISI 304	stainless steel	200 pcs.
202-0616.04-00000	13.5 mm	5.5 mm	10 mm	16 mm	M6	AISI 304	stainless steel	200 pcs.

6-040
◂ all product details on DIRAK.com

Countersunk Screws and Hexagon Nuts

[6-041]

RoHS WEEE

Advantages

- Countersunk machine screws according to DIN 965 DIN-EN-ISO 7046.
- Hex. nut according to DIN 934 DIN-EN-ISO 4032 and DIN 985 DIN-EN-ISO 10511.

Materials

- **Countersunk machine screws and hex. nuts:** steel, zinc plated

d = M5	d = M6	d = M8
a = 1.6	a = 2.0	a = 2.5
k = 2.5	k = 3.0	k = 4.0
d_1 = 9.2	d_1 = 11.0	d_1 = 14.5

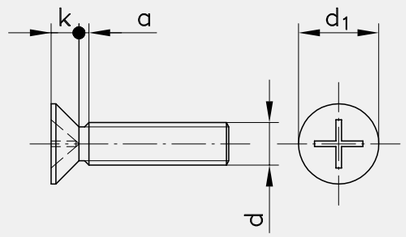

Countersunk screws

Part Number	Thread size	L	Delivery Unit
860-0965.00-00512	M5	12 mm	200 pcs.
860-0965.00-00516	M5	16 mm	200 pcs.
860-0965.00-00520	M5	20 mm	200 pcs.
860-0965.00-00525	M5	25 mm	200 pcs.
860-0965.00-00530	M5	30 mm	200 pcs.
860-0965.00-00540	M5	40 mm	200 pcs.
860-0965.00-00612	M6	12 mm	200 pcs.
860-0965.00-00616	M6	16 mm	200 pcs.
860-0965.00-00620	M6	20 mm	200 pcs.
860-0965.00-00625	M6	25 mm	200 pcs.

Hexagon nut

Part Number	Thread size	self-locking	Delivery Unit
860-0934.00-00005	M5		200 pcs.
860-0985.00-00005	M5	Yes	200 pcs.
800-0035.00-00000	M6		200 pcs.
800-0074.00-00000	M6	Yes	200 pcs.
860-0934.00-00008	M8		200 pcs.
800-0036.00-00000	M8		200 pcs.
800-0022.00-00000	M8	Yes	200 pcs.

all product details ▸ on DIRAK.com
6-041

Tenon Blocks and Anti-twist Protection

[4-248]

RoHS WEEE

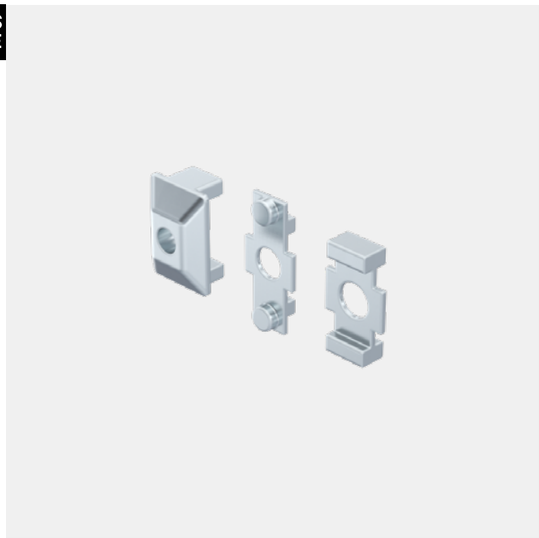

Advantages

- For application with hinges 4-247 and 4-247.01.
- Tenon blocks for 8 or 10mm groove.
- Fastening by M6.
- Anti-twist protection for sheet metal construction.
- For vertical or horizontal applications.
- Tolerance compensation possible by oblong holes.

Materials

- **Tenon blocks and anti-twist protection:** zinc die, untreated

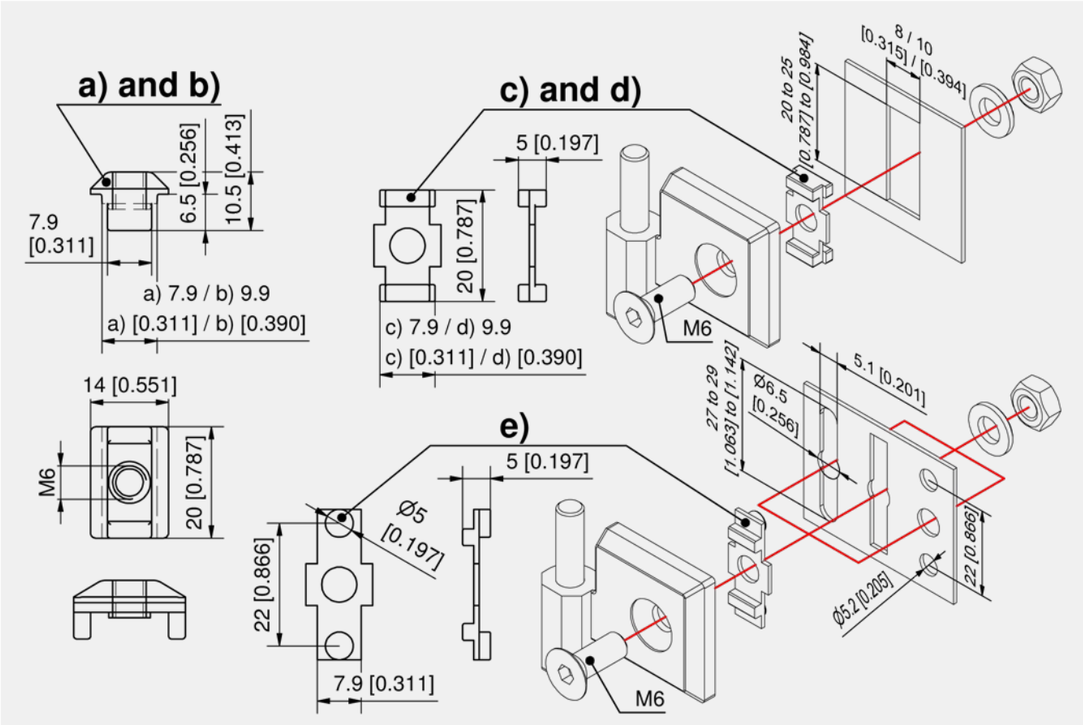

Tenon blocks and anti-twist protection

	Part Number	Name	Groove width	Cutout	Thread size	Door-thickness (S)	Delivery Unit
a)	265-1001.00-00000	Tenon blocks with anti-twist protection	8 mm	8 x 20 to 25 mm	M6	0 - 3.2 mm	10 pcs.
b)	265-1002.00-00000	Tenon blocks with anti-twist protection	10 mm	10 x 20 to 25 mm	M6	0 - 3.2 mm	10 pcs.
c)	265-1101.00-00000	Anti-twist protection for square	8 mm	8 x 20 to 25 mm			10 pcs.
d)	265-1102.00-00000	Anti-twist protection for square	10 mm	10 x 20 to 25 mm			10 pcs.
e)	265-1103.00-00000	Anti-twist protection for drill-holes		3 options, see drawing			10 pcs.

4-248

◂ all product details on DIRAK.com

Nut Plates

[6-042]

RoHS WEEE

Advantages

- The nut plates have been designed to allow an easy installation of the hinges in our 218-series. Tightening the screws from the outside only.
- Elimation of the time-consuming fitting of small single nuts in often quite difficult accessible corners.
- Oversized holes/cutouts allow for horizontal and/or vertical adjusting.
- Adjustment and alignment with just one tool, only from outside.
- The teeth (1.) on all 4 corners create enough friction to simplify installation and adjusting.
- If this friction is not wanted: these teeth can also point away from the inner skin of the door/frame.

Materials

- **Nut plate:** steel, zinc plated

Remarks

2. cutout for horizontal and vertical adjustment

3. cutout for horizontal and/or vertical adjustment

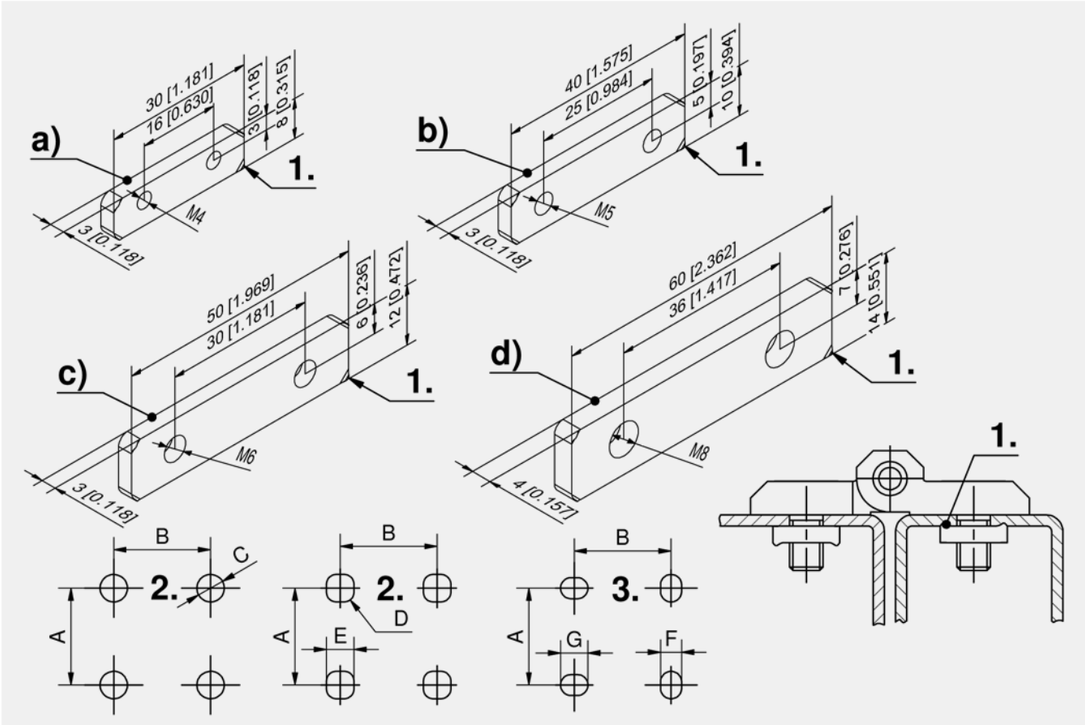

Nut plates

	Part Number	Thread size	A	B	C	D	e	f	G	Delivery Unit
a)	218-0907.15-00000	M4	16 mm	18 mm	6.5 mm	2 mm	6.5 mm	4.5 mm	6.5 mm	10 pcs.
b)	218-0908.15-00000	M5	25 mm	25 mm	7.5 mm	2.5 mm	7.5 mm	5.5 mm	7.5 mm	10 pcs.
c)	218-0909.15-00000	M6	30 mm	30 mm	8.5 mm	3 mm	8.5 mm	6.5 mm	8.5 mm	10 pcs.
d)	218-0910.15-00000	M8	36 mm	36 mm	10.5 mm	4 mm	10.5 mm	8.5 mm	10.5 mm	10 pcs.

all product details ▸ on DIRAK.com

6-042

Complementary Products

Extremely flexible.

The leveling foot can be equipped with a standard commercial M8 hexagonal screw DIN 933 / ISO 4017 with a freely selectable length as required. With just one product you can cover all the variants you need.

Gefördert durch:
Bundesministerium für Wirtschaft und Energie
aufgrund eines Beschlusses des Deutschen Bundestages
ZIM Zentrales Innovationsprogramm Mittelstand

Page 767

High-quality and stable.

The hygienic wrench size 13 mm is made of high-strength plastic and protects the mirror polish finish of hygienic quarter-turns from damage. It is also stable and resilient.

Page 770

One for all.

Easy, fast and flexible – the universal square section wrench for various railway inserts.

Hygienic Wrench for SW13 PA

See page 767

762 DST Cutout-Cover [5-960DST]

763 DST Reinforcement Plate [6-079DST]

764 DST Tools for Uninstallation [6-080DST]

765 Leveling Foot M6/M8 [6-008]

766 Universal Key [6-101]

766 Door Catcher with Catch Pin Stainless Steel [7-911]

767 Wrench for SW13 [6-102]

767 Hygienic Wrench for SW13 PA [6-102.01]

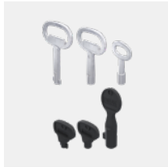

768 Wrenches and Keys [6-100]

770 Keys for the Railway Sector [6-105]

771 Drawing Pocket [6-220]

772 Window oval [6-225]

773 Window [6-227]

774 Cover Stay [6-180]

775 Telescopic Cover Support [6-174]

776 Telescopic Cover Support [6-170]

778 Telescopic Cover Support [6-190]

779 Telescopic Cover Support Stainless Steel [7-300]

780 Wind Stop [6-200]

781 Wind Stop Stainless Steel [7-310]

782 Cable Tie Mount ☐9.5 and ☐12.7 [6-070]

783 Cable Tie Mount [6-068]

784 Velcro Cable Tie [6-078]

785 Wire Catch [6-060]

786 Cable Management Device ☐9.5 [6-062]

787 Cable Management Device ☐12.7 [6-061]

788 Clip-on Radius R30 [6-065]

Complementary Products

DST Cutout-Cover

[5-960DST]

Advantages

- For cutout 30x7mm, 30x10mm, 30x14mm and 25x10mm.
- Tool-less installation.

Materials

- **Cutout-cover:** NBR, black or neoprene 70° shore

Remarks

(S) = 1.5 +/-0.1

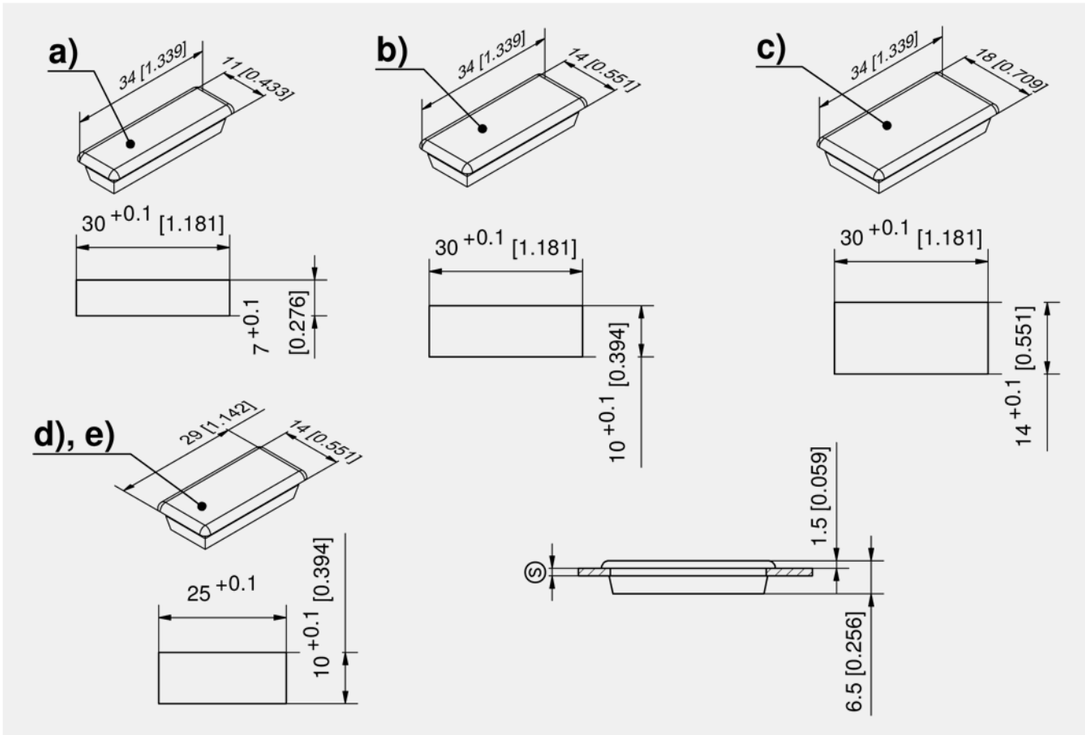

Cutout-cover

	Part Number	Cutout	Material	Surface	Delivery Unit
a)	292-0401.00-03007	30 x 7 mm	NBR	black	10 pcs.
b)	292-0401.00-03010	30 x 10 mm	NBR	black	10 pcs.
c)	292-0402.00-03014	30 x 14 mm	NBR	black	10 pcs.
d)	292-0403.06-09005	25 x 10 mm	neoprene 70°	black	10 pcs.
e)	292-0403.06-07035	25 x 10 mm	neoprene 70°	light grey RAL 7035	10 pcs.

5-960DST
◂ all product details on DIRAK.com

DST Reinforcement Plate

[6-079DST]

Advantages

- For cutouts 30x8mm, 30x10mm, 30x14mm and 30x15mm.
- For using the DIRAK-SNAP-Technology in thin-walled sheets and for higher loads.
- Tool-less installation at the same time or later.
- This provides a vibration-proof connection of the reinforcement plate with the DST product.
- One side angled to be used at bendings.
- Can also be used for the uninstallation of DST products with the a.m. cutouts.

Materials

- **Reinforcement Plate:** steel, zinc plated

Remarks

The clamping range (S) results in sheet thickness and reinforcement plate.

Example: sheet thickness 1mm + reinforcement plate 2mm = 3mm clamping range

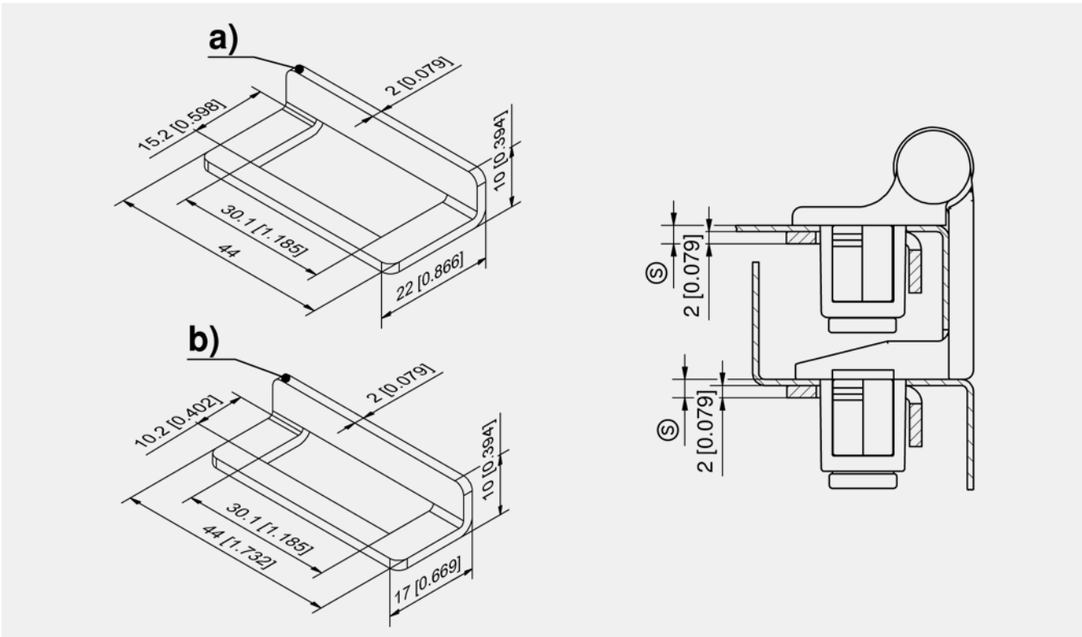

Reinforcement plate

	Part Number	Cutout	Cutout 2	Delivery Unit
a)	292-0701.15-01530	30 x 14 mm	30x15 mm	10 pcs.
b)	292-0702.15-01030	30 x 8 mm	30x10 mm	10 pcs.

all product details ▸ on DIRAK.com
6-079DST

DST Tools for Uninstallation

[6-080DST]

DST

RoHS WEEE

Advantages

- a) tool for uninstallation for cutouts 30x8mm, 30x10mm, 30x14mm and 30x15mm and 25mm length.
- b), d) and e) tool for uninstallation of DST fasteners.
- c) tool for uninstallation for cutout with 14mm and 15mm width.

Materials

- **Tool for uninstallation:** stainless steel, brass and steel zinc plated

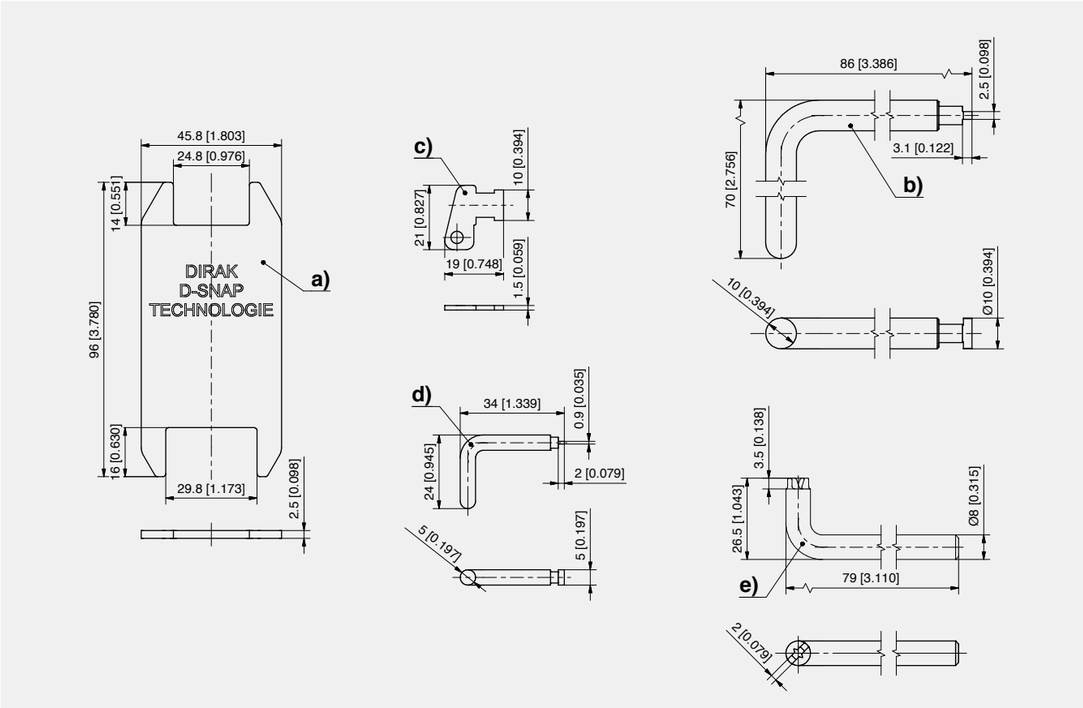

DST tools for uninstallation

	Part Number	Material	Surface	Delivery Unit
a)	292-0306.80-02530	stainless steel		1 pc.
b)	292-0311.15-00000	steel	zinc plated	1 pc.
c)	292-0301.15-00000	steel	zinc plated	1 pc.
d)	292-0302.70-00000	brass	untreated	1 pc.
e)	292-0312.83-00000	stainless steel		1 pc.

Complementary Products

6-080DST

◂ all product details on DIRAK.com

Leveling Foot M6/M8

[6-008]

RoHS WEEE

Advantages

- Length of hexagon head screw DIN 933/ISO 4017 freely selectable (e) or hex. nut, low form DIN 439/ISO 8675/ISO 4035.
- Inclination angle of +/- 25°.
- Large contact surface due to the use of a large ball in conjunction with a small plate diameter.
- No lifting forces because the ball is stored in an indentation. This prevents the edge on the plate from breaking.
- In relation to the load the plate can be designed smaller and thus be mounted closer to the edge of the housing.
- Anti-slip insert included.

Materials

- **Plate, sleeve and nut:** PA6
- **Anti-slip insert:** NBR

Remarks

The values given in the table are based on a simple compressive load perpendicular to the Leveling Foot. The additional bending and buckling stresses that frequently occur in practice lead to reduced load-bearing capacity of the bolt and must be taken into account accordingly.

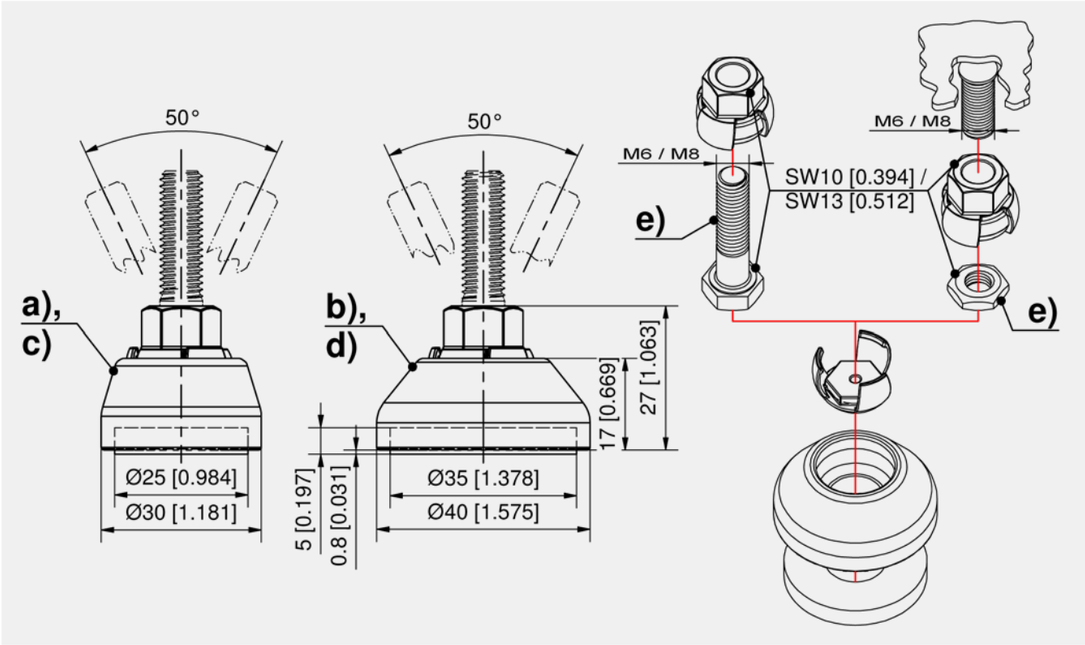

Leveling foot

	Part Number	Diameter Ø	Thread size	SW	Static load capacity in kN	Delivery Unit
a)	580-9008.00-00001	30 mm	M8	13 mm	7.5	40 pcs.
b)	580-9007.00-00001	40 mm	M8	13 mm	7.5	40 pcs.
c)	580-9010.00-00001	30 mm	M6	10 mm	7.5	40 pcs.
d)	580-9009.00-00001	40 mm	M6	10 mm	7.5	40 pcs.

Complementary Products

all product details ▸ on DIRAK.com

6-008

Door Catcher with Catch Pin Stainless Steel [7-911]

RoHS WEEE

Advantages

- 2-parts.
- Adjusts "door to frame" always in the right position to each other.
- Applicable horizontally and vertically.
- Applicable for cabinets exposed to dynamic loads (e.g. vibrations and shocks).
- Door remains locked - even if vibrations loads occur.
- A "hanging" of the door will be balanced.

Materials

- **Door catcher with catch pin:** AISI 316

Remarks

1. catch pin, 2. door catcher

The door-part will be screwed onto a welding stud, M8.

The frame-part will be mounted with screws, M6.

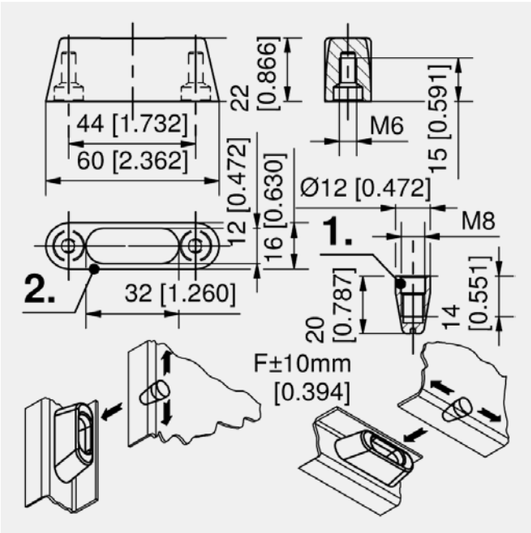

Door catcher with catch pin

Part Number	Vibration-proof	Installation type	Delivery Unit
241-9201.00-00000	Yes	screw-on	1 pc.

Wrench for SW13 [6-102]

RoHS WEEE

Advantages

- Wrenches for quarter-turns, 200 and 220 series and for inserts see product system 2-141.
- With area for logo 24x8mm.

Materials

- **Wrenches:** zinc die, untreated or blue, powder-coated

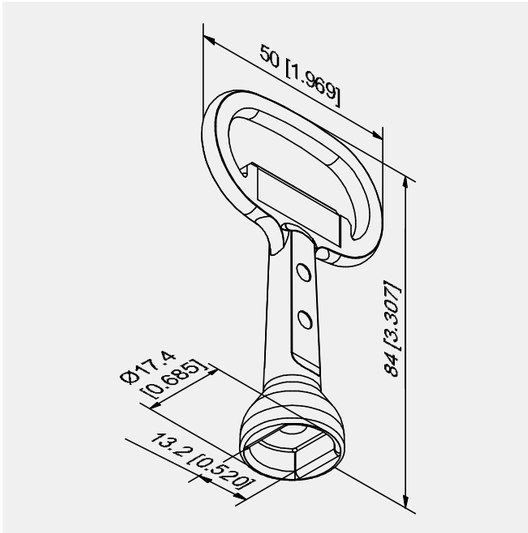

Wrenches

Part Number	Insert	Surface	Delivery Unit
204-0140.00-00000	SW13	untreated	10 pcs.
204-0140.39-05010	SW13	blue, powder-coated	10 pcs.

Universal Key [6-101]

RoHS WEEE

Advantages

- Universal key for 4 inserts:
- Triangular 8mm
- Square 6mm
- Square 8mm
- Double bit 5mm

Materials

- **Universal key:** zinc die, zinc plated

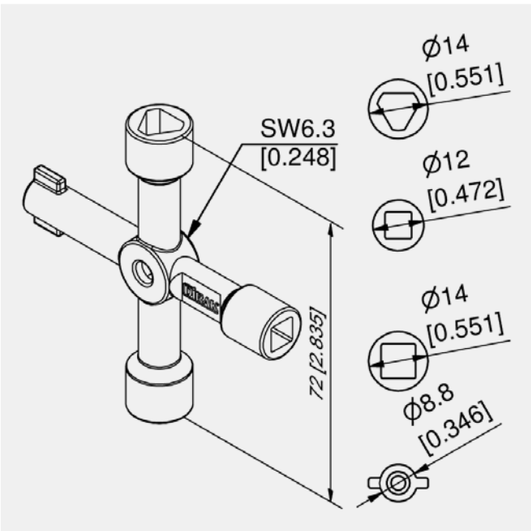

Universal key

Part Number	Name	Delivery Unit
204-0701.07-07500	Universal key for Inserts	10 pcs.

Hygienic Wrench for SW13 PA [6-102.01]

Advantages

- Wrench for quarter-turns with insert SW13 (see product system 7-081).
- No scratching of quarter-turn surface.
- Visual assignment to hygienic design.
- Interchangeable insert for the placement of a company logo available on request.
- Hole for attachment to key ring/strap.

Materials

- **Wrench:** Grivory GV-5H, blue

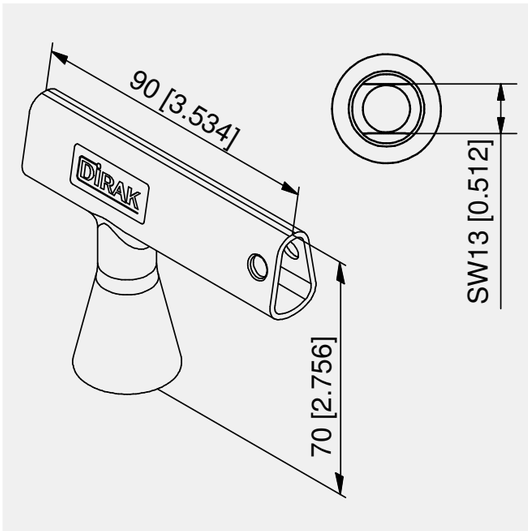

Wrench

Part Number	Insert	Surface	Delivery Unit
204-0146.51-05015	SW13	blue	10 pcs.

Complementary Products

7-911 6-101

◂ all product details on DIRAK.com

all product details ▸ on DIRAK.com

6-102 6-102.01

Wrenches and Keys

RoHS WEEE

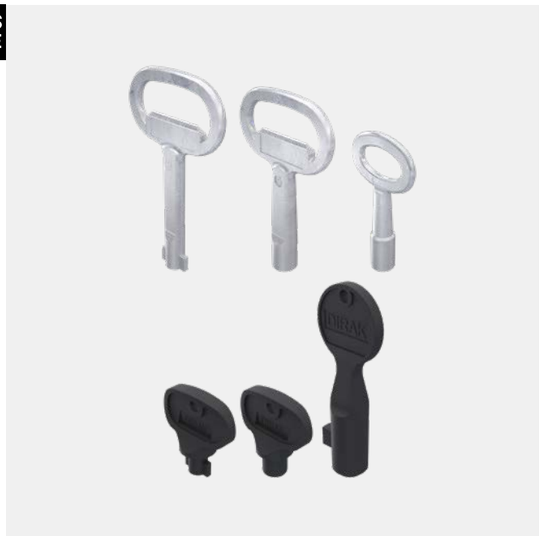

Advantages

- Wrenches and keys for quarter-turns, 200 and 220 series and for inserts see product system 2-141.
- Version A, B and G with area for logo 24x8mm.
- Version D and E with area for logo 20x6mm.

Materials

- **Form A), B) and C):** zinc die, untreated
- **Form D) and E):** PA, black
- **Form F):** zinc die, nickel plated
- **Form G):** PS, black

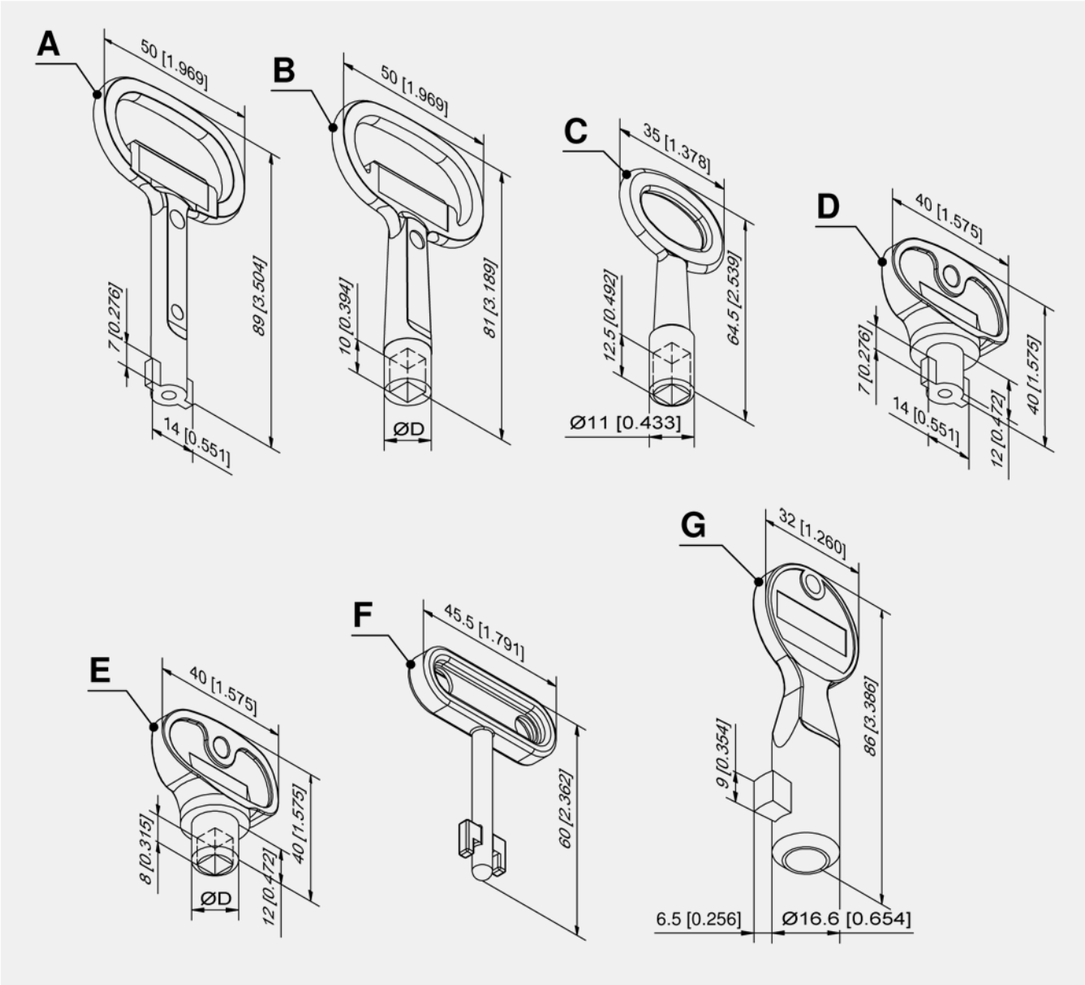

6-100

all product details on DIRAK.com

Key form A

Part Number	Insert	Delivery Unit
204-0107.00-00000	Double bit 3mm pin	10 pcs.
204-0108.00-00000	Double bit 5mm pin	10 pcs.

Female wrench and male wrench form B

Part Number	Insert	D	Delivery Unit
204-0102.00-00000	Square 7mm	14.2 mm	10 pcs.
204-0103.00-00000	Square 8mm	14.2 mm	10 pcs.
204-0104.00-00000	Triangular 7mm	14.2 mm	10 pcs.
204-0105.00-00000	Triangular 8mm	14.2 mm	10 pcs.
204-0106.00-00000	Triangular 6.5mm CNOMO	14.2 mm	10 pcs.
204-0109.00-00000	Daimler Benz type	11.5 mm	10 pcs.
204-0110.00-00000	Crown type key	15.9 mm	10 pcs.
204-0111.00-00000	Square 6mm	11.5 mm	10 pcs.
204-0112.00-00000	Triangular 6.5mm	11.5 mm	10 pcs.
204-0113.00-00000	Triangular 9mm EDF	15.9 mm	10 pcs.
204-0116.00-00000	Half-round czech	15.9 mm	10 pcs.
204-0117.00-00000	Round mandrel with notch (DÜWAG)	14.2 mm	10 pcs.
204-0119.00-00000	Male square 6mm	11.8 mm	10 pcs.
204-0120.00-00000	Male square 7mm	11.8 mm	10 pcs.
204-0121.00-00000	Male square 8mm	11.8 mm	10 pcs.
204-0133.30-00000	Male hex. 8mm (5/16")	11.8 mm	10 pcs.
204-0134.30-00000	Hex. 7/16"	15.6 mm	10 pcs.
204-0139.00-00000	Hex. SW10	15.9 mm	10 pcs.

Wrench form C

Part Number	Insert	Delivery Unit
204-0501.00-00000	Square 6mm	10 pcs.
204-0502.00-00000	Triangular 6.5mm	10 pcs.

Key form D

Part Number	Name	Insert	Delivery Unit
204-0407.03-00000	Double bit key	Double bit 3mm pin	10 pcs.
204-0408.03-00000	Double bit key	Double bit 5mm pin	10 pcs.

Wrench form E (Logo both sides)

Part Number	Insert	D	Delivery Unit
204-0401.03-00000	Square 6mm	11.5 mm	10 pcs.
204-0402.03-00000	Square 7mm	15.5 mm	10 pcs.
204-0403.03-00000	Square 8mm	15.5 mm	10 pcs.
204-0404.03-00000	Triangular 6.5mm	11.5 mm	10 pcs.
204-0405.03-00000	Triangular 7mm	15.5 mm	10 pcs.
204-0406.03-00000	Triangular 8mm	15.5 mm	10 pcs.
204-0409.03-00000	Blade 10 x 1,4	17 mm	10 pcs.

Key form F

Part Number	Insert	Delivery Unit
204-0302.42-00000	FIAT	10 pcs.

Key form G

Part Number	Name	Delivery Unit
204-0301.00-00000	PZ building key	10 pcs.

Keys for the Railway Sector

[6-105]

RoHS WEEE

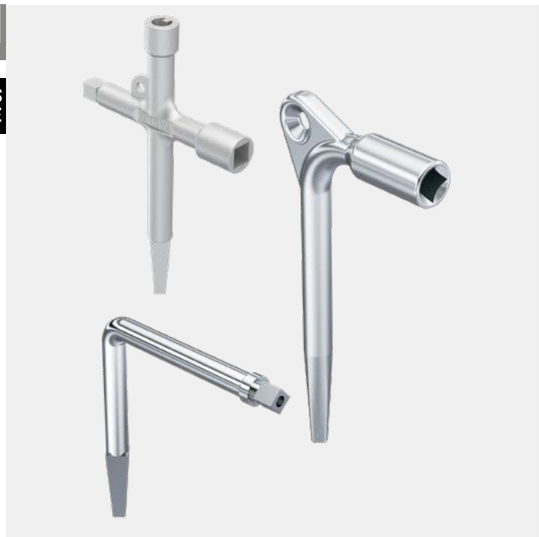

Advantages

- Keys for operating locks in the railway sector (especially outdoors).
- **Version a):** universal key for railway applications.
- Tool for 4 inserts: conical square insert (Berne key), socket square 7.6mm insert (UK insert), DÜWAG insert, conical square 9mm.
- Intergrated eyelet for attaching key ring or key bands.
- **Version b):** railway key
- Key for quarter-turns with conical insert square 9 (Berne key) and conical outer square.
- Intergrated eyelet for attaching key ring or key bands.
- **Version c):** railway key
- Key for quarter-turns with insert socket square 7.6 (UK insert) and conical outer square.

Materials

- **Version a):** stainless steel, untreated
- **Version b) and c):** malleable cast iron

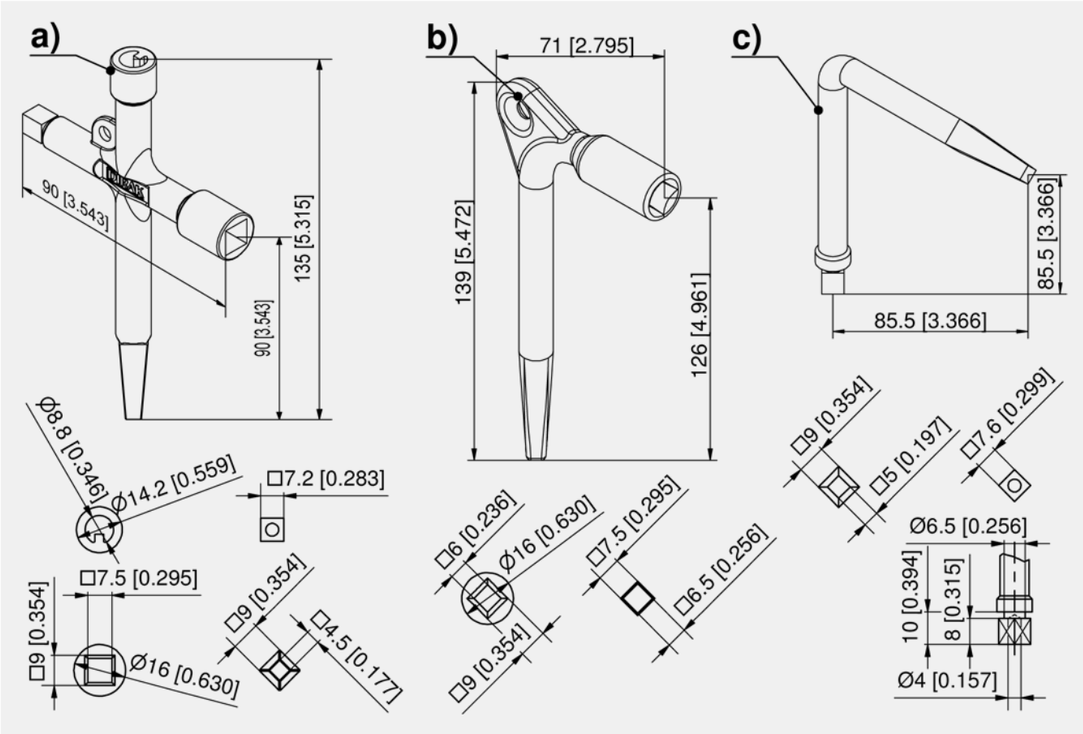

Keys

	Part Number	Name	Insert	Delivery Unit
a)	204-0702.80-00000	Railway Key	Universal	1 pc.
b)	701-7049.00-00000	Wrench	Conical square 9mm	1 pc.
c)	204-0126.00-00000	Wrench	Socket square 7.6mm	10 pcs.

Complementary Products

◂ all product details on DIRAK.com
6-105

Drawing Pocket

[6-220]

RoHS WEEE

Advantages

- Self adhesive drawing pocket for heavy duty applications.
- a) with two 6mm holes, A4 format.
- b) with two 9x6mm oblong holes.

Materials

- **Drawing pocket:** PS, impact proof

Remarks

1. field for company logo

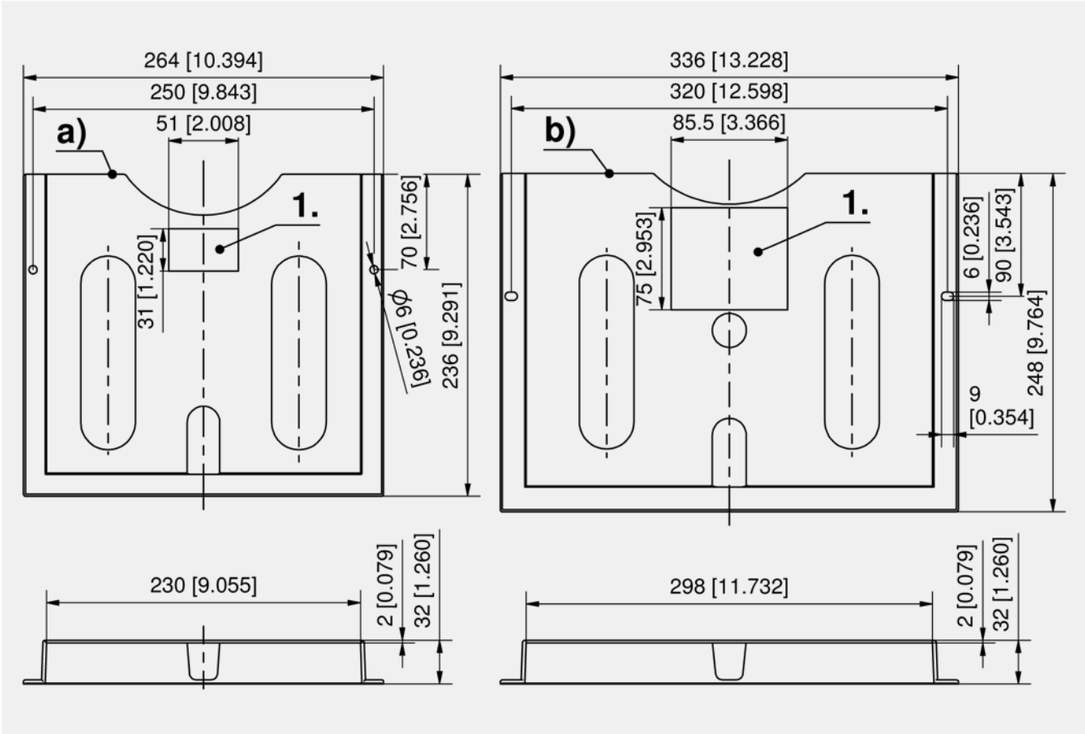

Drawing pocket

	Part Number	Holes	Surface	Installation type	Delivery Unit
a)	231-9001.00-00000	Ø6	grey RAL 7035	self-adhesive / screw-on	1 pc.
b)	231-9004.00-00000	9x6	grey RAL 7035	self-adhesive / screw-on	1 pc.
b)	231-9005.00-00000	9x6	orange RAL 2000	self-adhesive / screw-on	1 pc.

Complementary Products

all product details ▸ on DIRAK.com
6-220

Window oval

[6-225]

IP 65

RoHS WEEE

Advantages

- Self-adhesive seal.
- 4 holes for flat head screw M5.

Materials

- **Window:** polycarbonate PC
- **Self-adhesive seal:** EPDM, cell sponge rubber

Remarks

1. seal

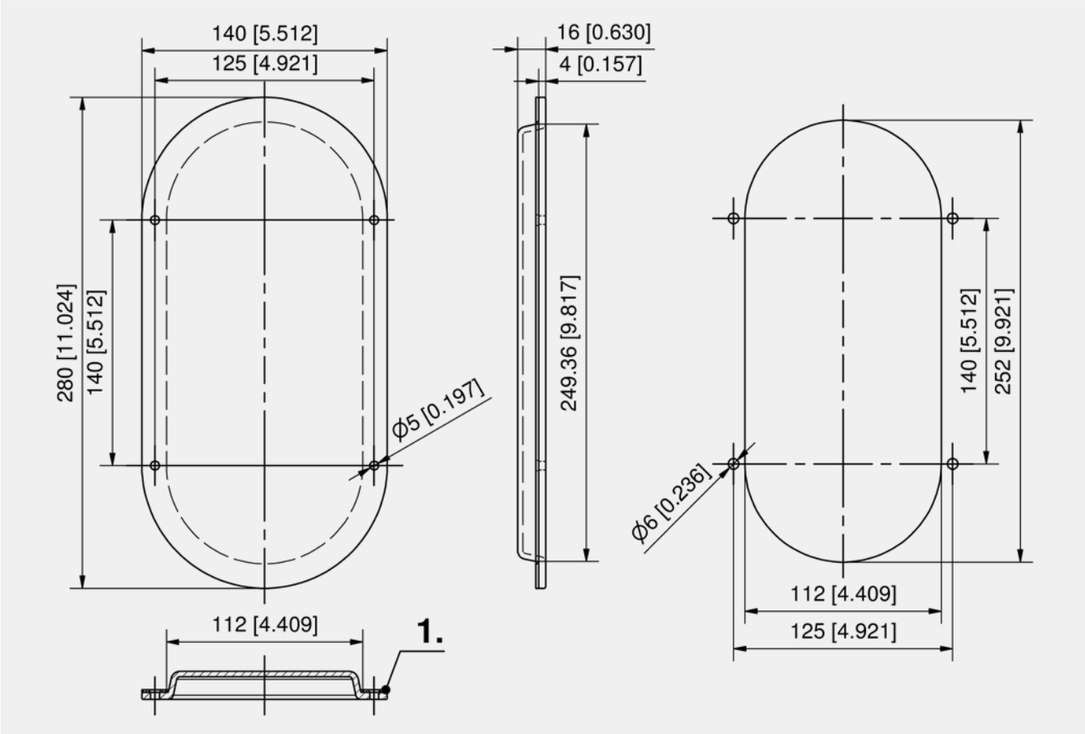

Window

Part Number	Width	Height	Cutout	Installation type	Delivery Unit
251-9101.00-00000	140	280	112 x 252	self-adhesive / screw-on	1 pc.

Complementary Products

all product details on DIRAK.com
6-225

Window

[6-227]

Advantages

- Window, clip-in, for door-thickness 0.8 to 2.5mm.
- Version with o-ring is IP65 according to DIN EN 60529.

Materials

- **Window:** polycarbonate PC
- **O-ring:** NBR

Remarks

1. o-ring

IP 65

RoHS WEEE

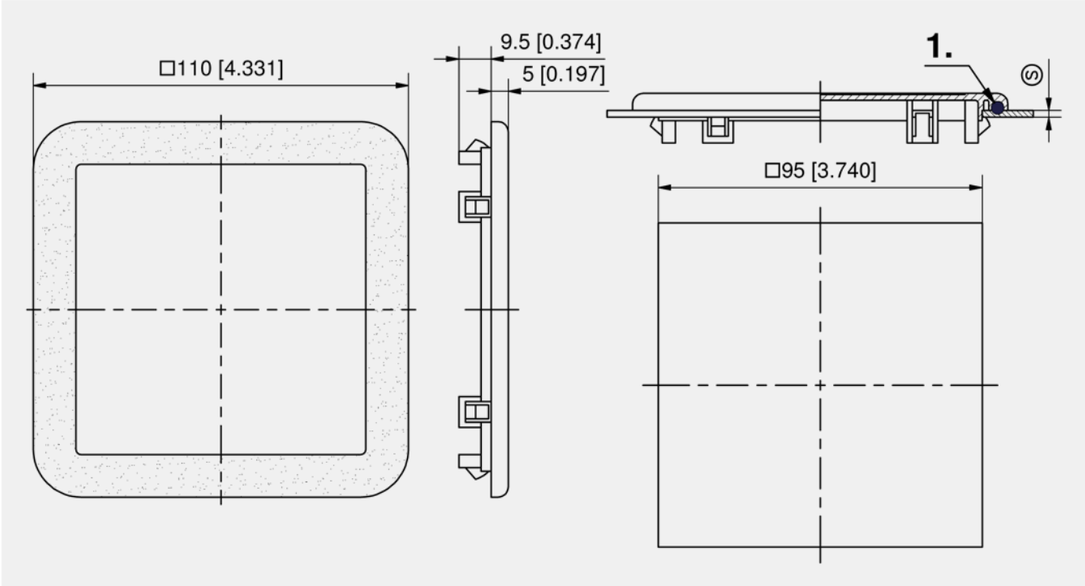

Window

Part Number	Version	Width	Height	Cutout	Installation type	Delivery Unit
251-0102.00-00000	without o-ring	110	110	□95	clip-in	1 pc.
251-9102.00-00000	with o-ring	110	110	□95	clip-in	1 pc.

Complementary Products

all product details on DIRAK.com
6-227

Cover Stay

[6-180]

Advantages

- Cover stay screw-on or weld-on.
- RH and LH version.

Materials

- **Cover stay:** steel, nickel plated

Remarks

1. snap spike
2. press up to close
3. push in
4. close the flap

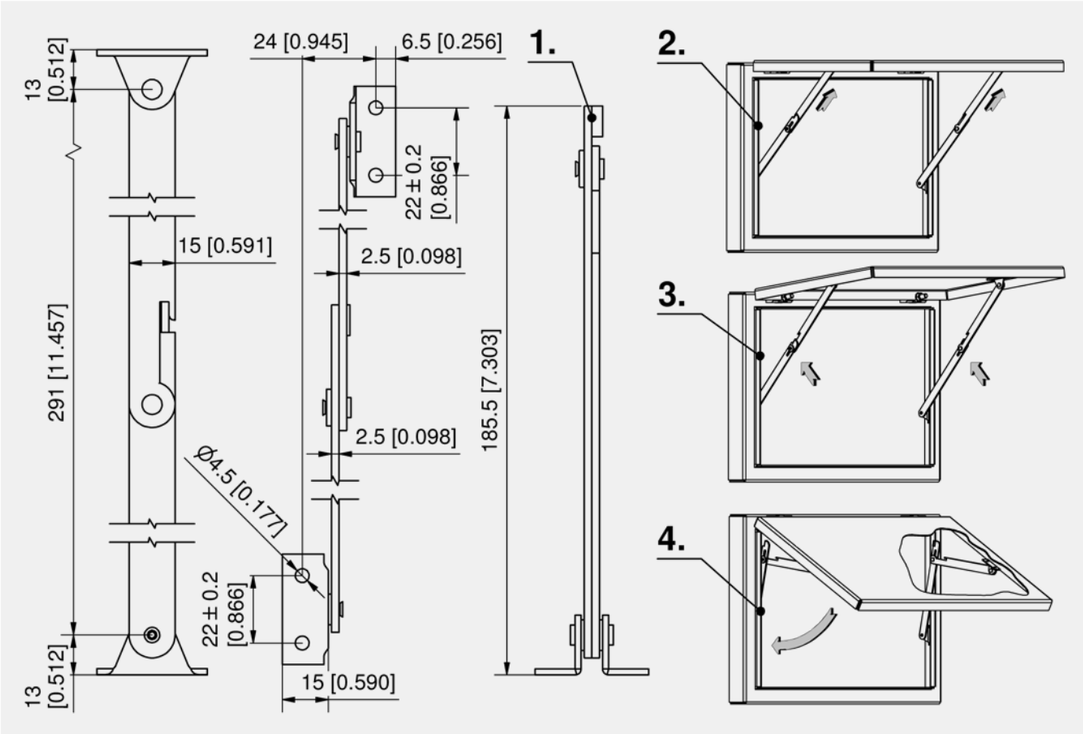

Cover stay

Part Number	Version	Delivery Unit
230-9101.00-00000	RH	5 pcs.
230-9102.00-00000	LH	5 pcs.

◂ all product details on DIRAK.com
6-180

Telescopic Cover Support

[6-174]

Advantages

- Telescopic cover stay with multiple stops and release in the end position, for desk-leafs and covers.
- RH / LH application.

Materials

- **Telescopic cover support and mounting angle:** steel, zinc plated

Remarks

To release the mechanism, the cover stay has to be extended completely.

2 spacers for M6 screws are included.

For installation dimensions and application examples see DIRAK.com

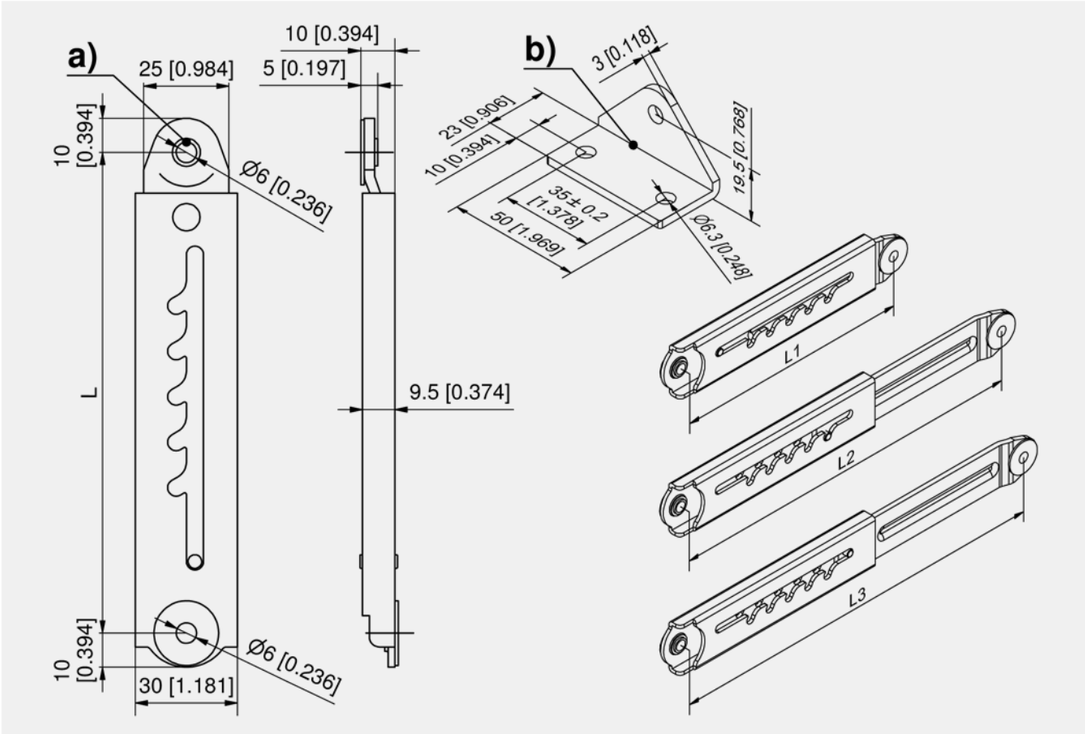

Telescopic cover support

	Part Number	Length L1 retracted	1st stop	2nd stop	3rd stop	4th stop	5th stop	6th stop	7th stop	8th stop	9th stop	10th stop	Length L3 extended	Quantity of stops	Delivery Unit
a)	230-9308.00-00000	140±2	164 mm	177 mm	189.5 mm	202 mm	214.5 mm						230±2	5	1 pc.
a)	230-9309.00-00000	214±2	234.5 mm	248 mm	261 mm	274.5 mm	288 mm	301 mm	314.5 mm	327 mm	340.5 mm	354 mm	374±2	10	1 pc.

	Accessories
b)	230-9401.00-00000 **Mounting angle**

all product details ▸ on DIRAK.com
6-174

Telescopic Cover Support

[6-170]

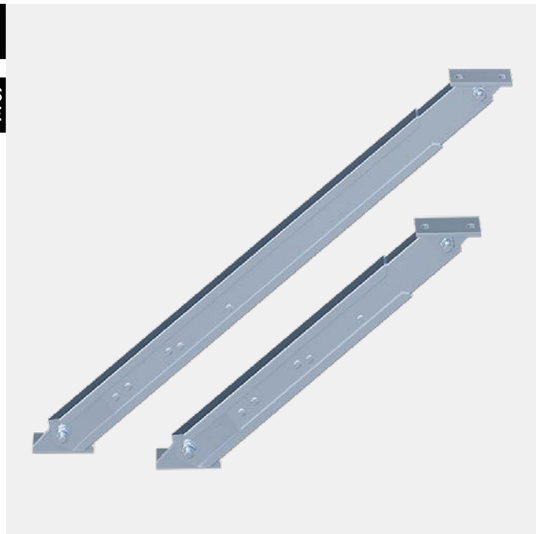

Advantages

- Telescopic cover support for covers and desk-leafs.
- Automatic locking and unlocking functionality by guide mechanism.
- Guides separately riveted, locking lever made of stainless steel.
- Robust design.
- RH / LH application.

Materials

- **Inner- and outer rails, mounting angles and cam plates:** steel, zinc plated
- **Catch lever:** stainless steel (cast)

Remarks

1. alignment of the locking lever by complete extension of the telescopic cover support.

2. after retraction of 3 cm the telescopic cover support snaps in securely.

3. renewed extension brings the locking lever back into free-run position.

4. the telescopic cover support can be retracted now.

For installation dimensions and application examples see DIRAK.com

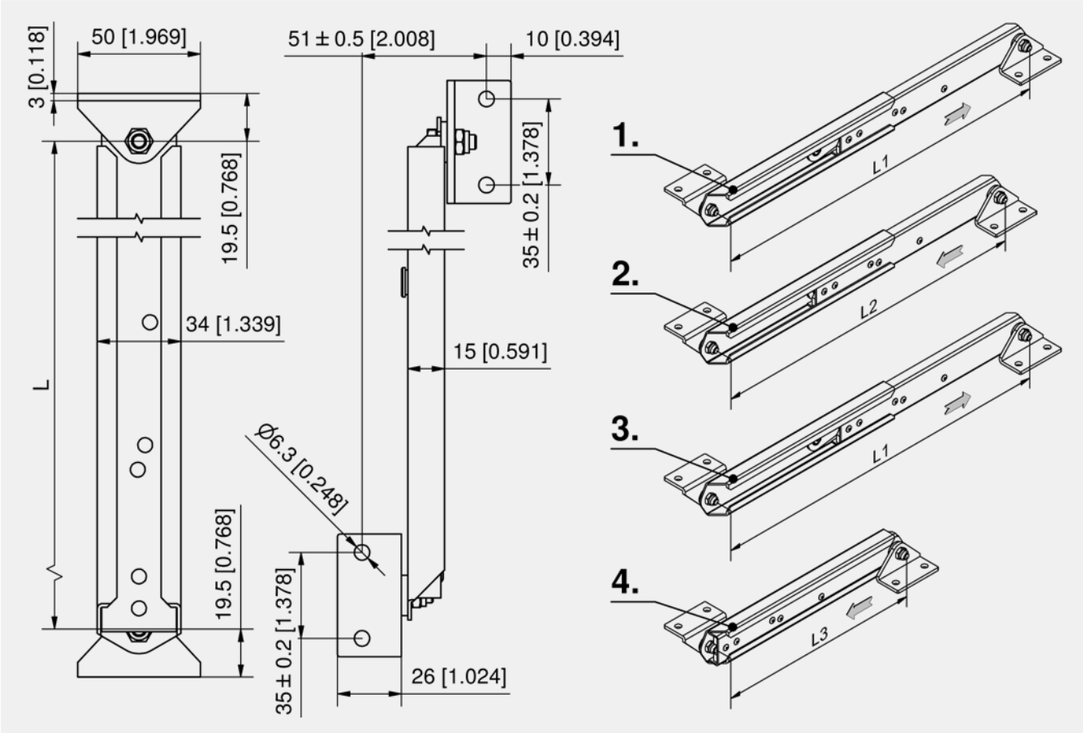

Telescopic cover support

Part Number	Length L1 extended	Length L2 extended, snapped	Length L3 retracted	Delivery Unit
230-9001.00-00000	365±2	335±2	215±2	1 pc.
230-9002.00-00000	725±2	695±2	395±2	1 pc.

Leveling Foot M6/M8

See page 765

6-170

all product details on DIRAK.com

Telescopic Cover Support

[6-190]

Advantages

- Clicks into place.
- When using two cover stays ring bolts (2) can be screwed on the inside of both locks. After connecting them with a steel wire both cover stays can be unlocked simultaneous.
- RH / LH application.

Materials

- **Telescopic cover support:** steel, zinc plated
- **Spring:** stainless steel

Remarks

For installation dimensions and application examples see DIRAK.com

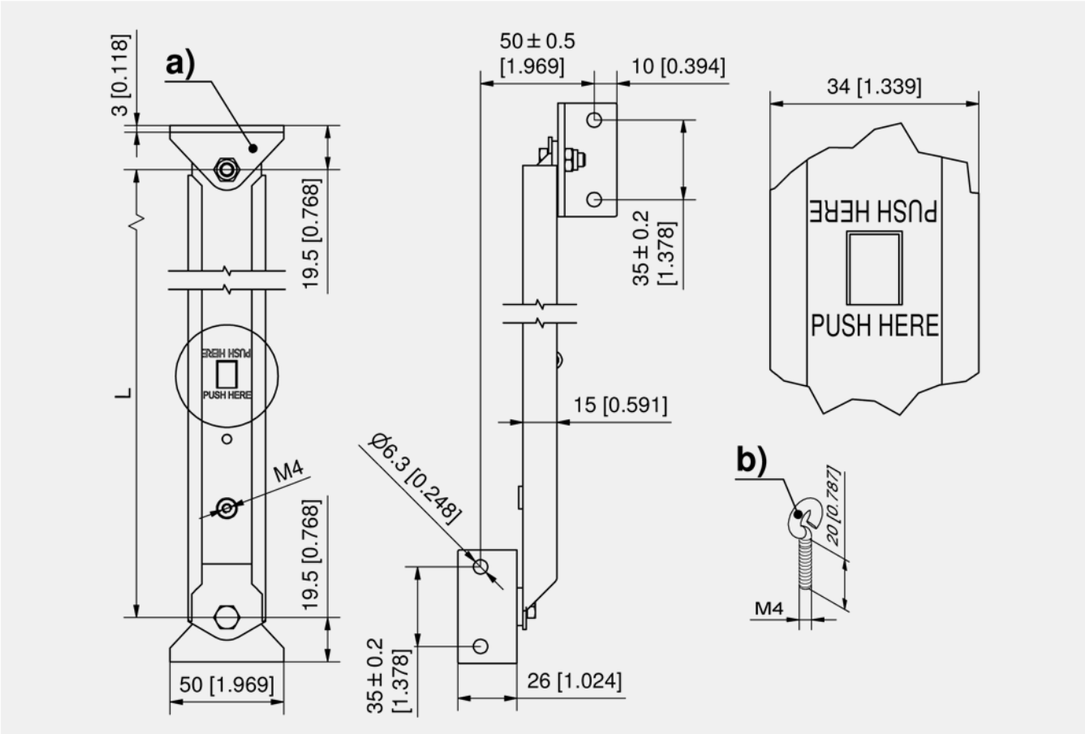

Telescopic cover support

	Part Number	Length L retracted	Length L extended	Delivery Unit
a)	230-9305.00-00000	370±2	710±2	1 pc.
a)	230-9306.00-00000	215±2	355±2	1 pc.

Accessories
b) 860-0048.07-00420 **Eyelet**

Complementary Products

all product details on DIRAK.com
6-190

Telescopic Cover Support Stainless Steel

[7-300]

Advantages

- For doors and lids.
- For wide lids with 2 cover stays you can release the 2 stops by installing 2 eyelets connected by a steel wire.
- RH / LH application.

Materials

- **Telescopic cover support:** AISI 304

Remarks

Other length L on request.

For installation dimensions and application examples see DIRAK.com

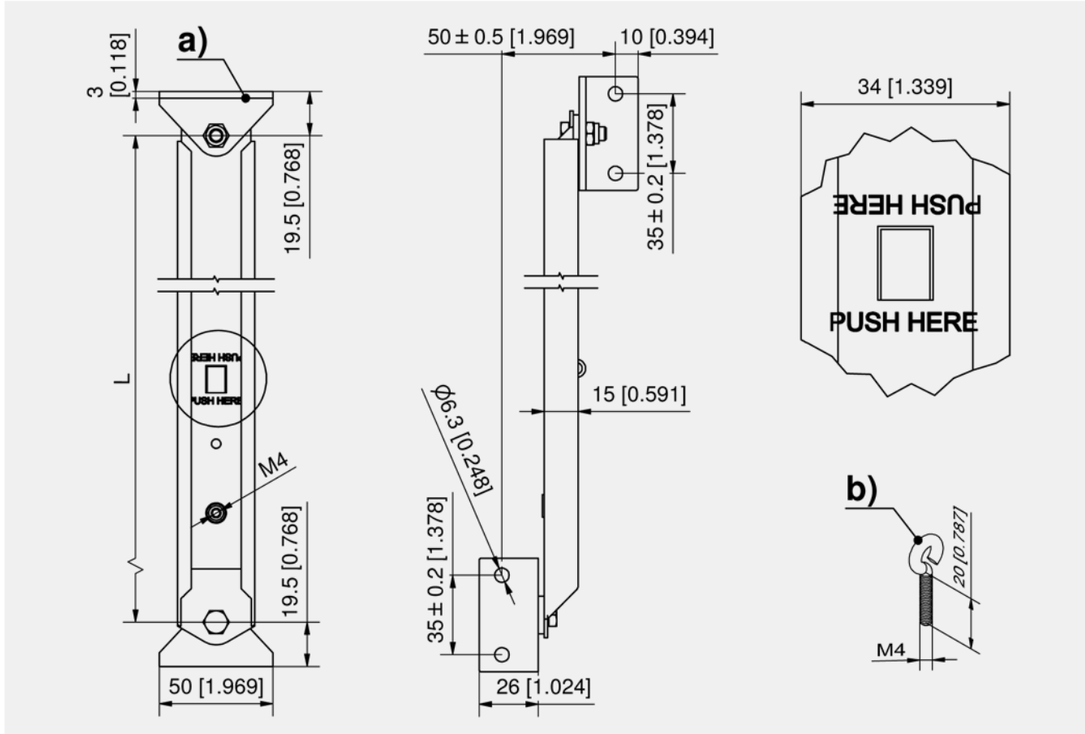

Telescopic cover support

	Part Number	Length L retracted	Length L extended	Delivery Unit
a)	230-9501.00-00000	370±2	710±2	5 pcs.
a)	230-9502.00-00000	215±2	355±2	5 pcs.

Accessories
b) 860-0048.07-00420 **Eyelet**

Complementary Products

all product details on DIRAK.com
7-300

Wind Stop

[6-200]

Advantages

- Wind stop with automatic lock to keep the door open.
- RH / LH application.

Materials

- **Wind stop:** steel, zinc plated

Remarks

Detailed dimensions see drawing.

For installation dimensions and application examples see DIRAK.com

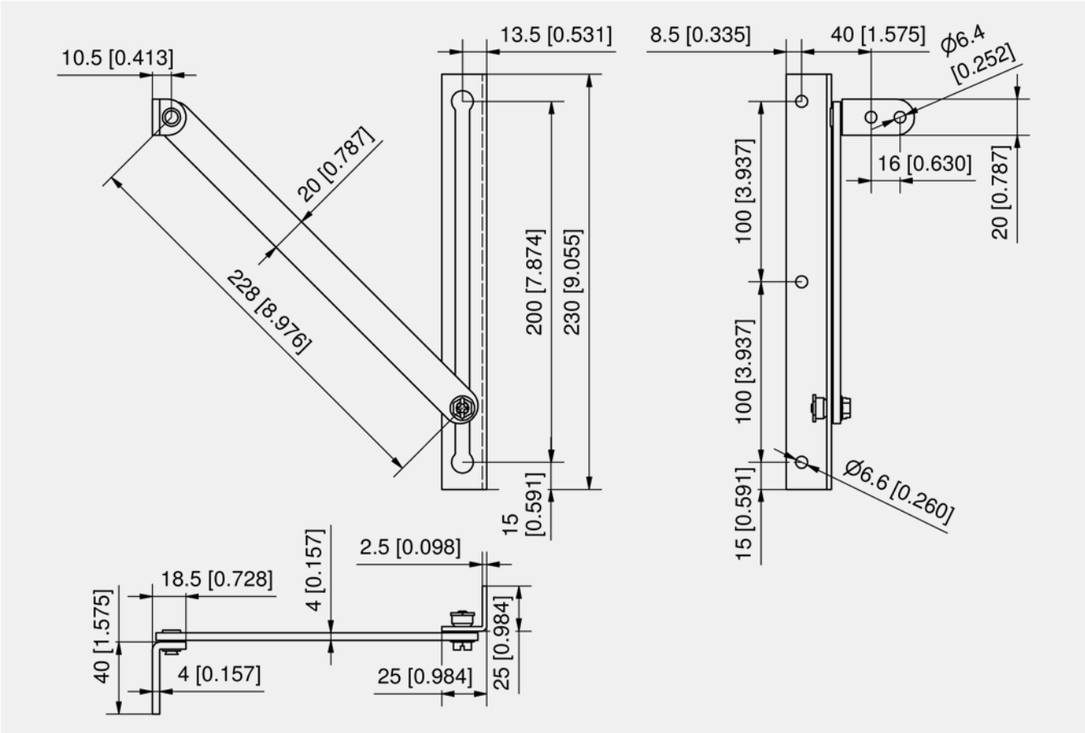

Wind stop

Part Number	Version	Automatic lock	Delivery Unit
221-9001.00-00000	RH/LH	Yes	5 pcs.

Wind Stop Stainless Steel

[7-310]

Advantages

- Wind stop with automatic lock to keep the door open.
- RH / LH application.

Materials

- **Wind stop:** AISI 304

Remarks

Detailed dimensions see drawing.

For installation dimensions and application examples see DIRAK.com

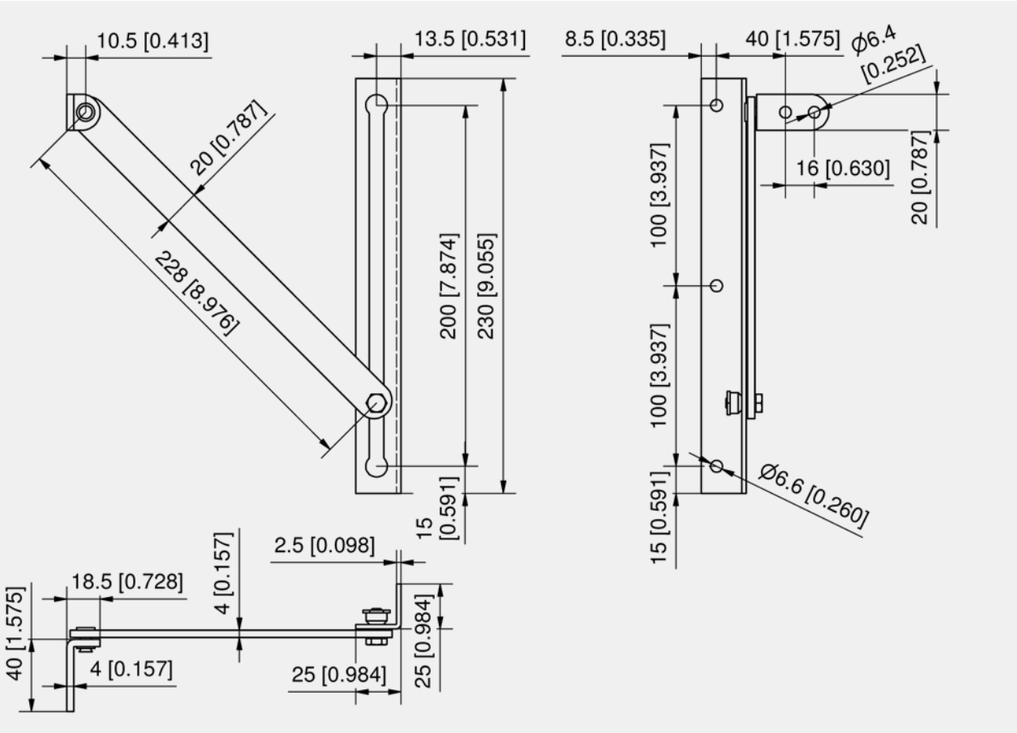

Wind stop

Part Number	Version	Automatic lock	Delivery Unit
221-9101.00-00000	RH / LH	Yes	5 pcs.

all product details on DIRAK.com
6-200

all product details on DIRAK.com
7-310

Complementary Products

Cable Tie Mount □9.5 and □12.7

[6-070]

Advantages

- Clips into the installation cut-out □9.5 or □12.7 for simple installation.
- Tool-less instalation.
- The square base (9.2 and 12.5) of the cable tie mount prevents it from turning within the installation cutout.
- Cable tie easily installed through loop.
- Audible click ensures proper secure installation.

Materials

- **Cable tie mount:** PA, black

Remarks

1. cable tie

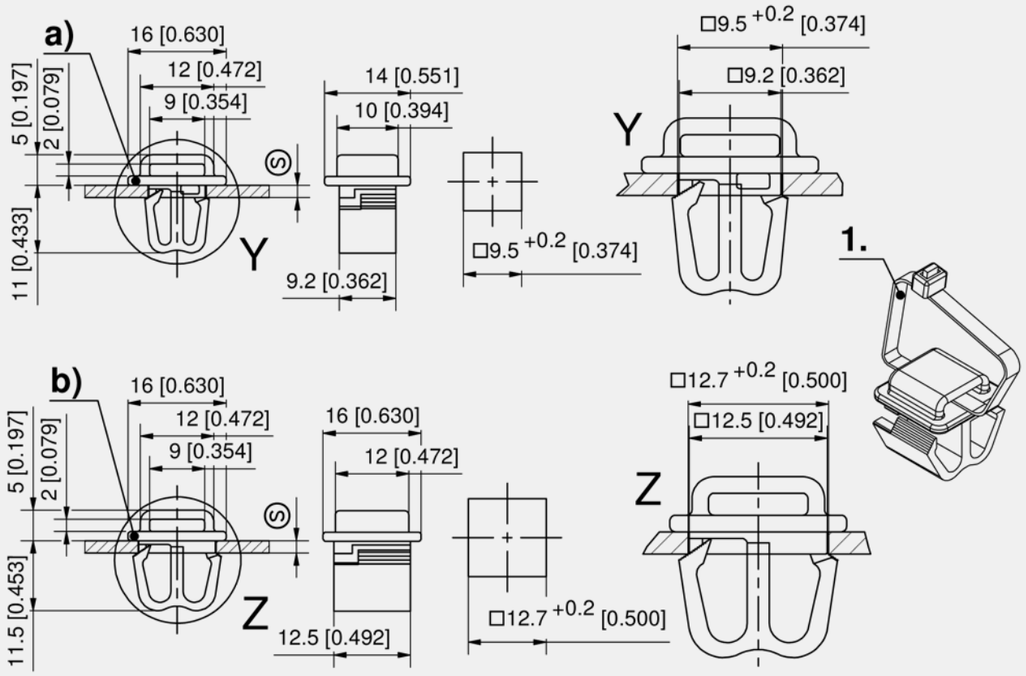

Cable tie mount

	Part Number	Cutout	Clamping range (S)	Installation type	Delivery Unit
a)	214-0107.51-00000	□9,5	1.5 - 2 mm	tool-less	250 pcs.
b)	214-0107.51-10000	□12.7	1.5 - 2 mm	tool-less	250 pcs.

Accessories
784 6-078 **Velcro Cable Tie**

6-070
all product details on DIRAK.com

Cable Tie Mount

[6-068]

Advantages

- Cable tie mount for quick, tool-less assembly onto a M6 weld stud.
- Simple insertion of the cable tie through the upper insertion opening.
- Secure fit in any position on the weld stud.
- Can be removed by simply unscrewing counter clock-wise.

Materials

- **Cable tie mount:** PA, black

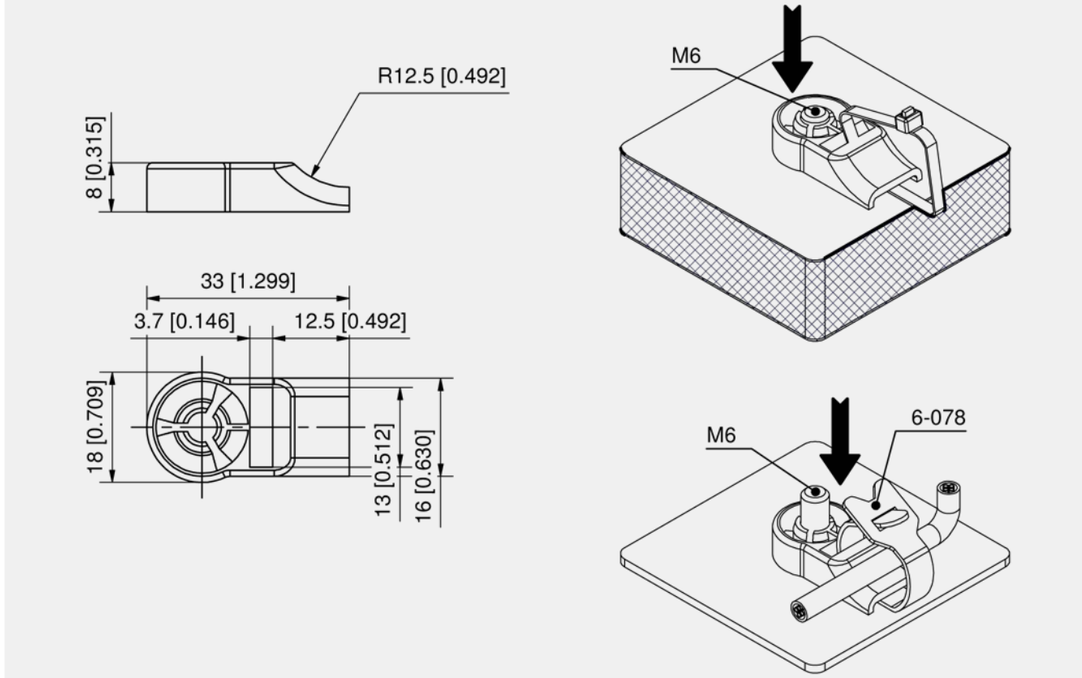

Cable tie mount

Part Number	Installation type	Delivery Unit
214-0111.51-00000	tool-less	250 pcs.

Accessories
784 6-078 **Velcro Cable Tie**

all product details on DIRAK.com
6-068

Velcro Cable Tie

[6-078]

RoHS WEEE

Advantages

- Velcro cable ties can be easily inserted into the holes in the cable tie bracket 6-068 and 6-070.
- Flexible application allows cables, supply lines and hoses to be wrapped easily, effectively and without tools.
- Can be reused multiple times.
- Protects sensitive materials from damage.
- Soft and flexible material.

Materials

- **Velcro cable tie:** PP and Velour, black
- **Peel back force:** 0.4 Ncm
- **Shear force:** 7.0 Ncm
- **Tensile strength:** 120 Ncm
- **Melting point:** 150°C

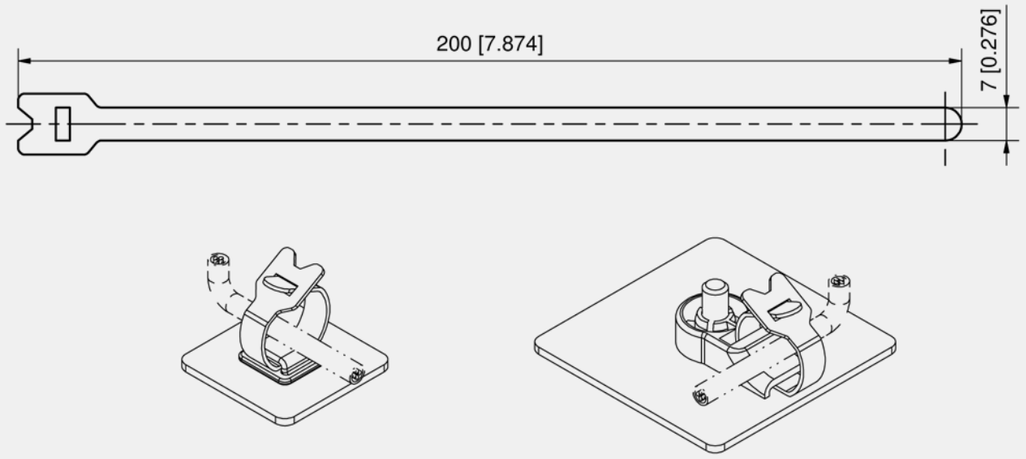

Velcro cable tie

Part Number	Version	Delivery Unit
214-0112.00-00050	Length 200mm	50 pcs.

	Accessories
783	6-068 **Cable Tie Mount**
782	6-070 **Cable Tie Mount □9.5 and □12.7**

Complementary Products

◂ all product details on DIRAK.com
6-078

Wire Catch

[6-060]

Advantages

- Wire catches can be fitted onto pre-punched channels / profiles.
- Tool-less installation.
- Easy installation in a suitable square hole by turning 45°.
- The weight of the cables will automatically secure the catch.
- Improves handling of power, network and fiber optic cables in the cabinet.
- Seismic-proof according to GR-63-CORE, Issue 4.

Materials

- **Wire catch:** PA, black

Remarks

Assembly: enter the wire catch in an angle of about 45° into the cutout and turn 45° clockwise. At this end position the special shape makes the wire catch fixed in the cutout.

(S) sheet-thickness 1.3 - 2.0 mm.

UL

RoHS WEEE

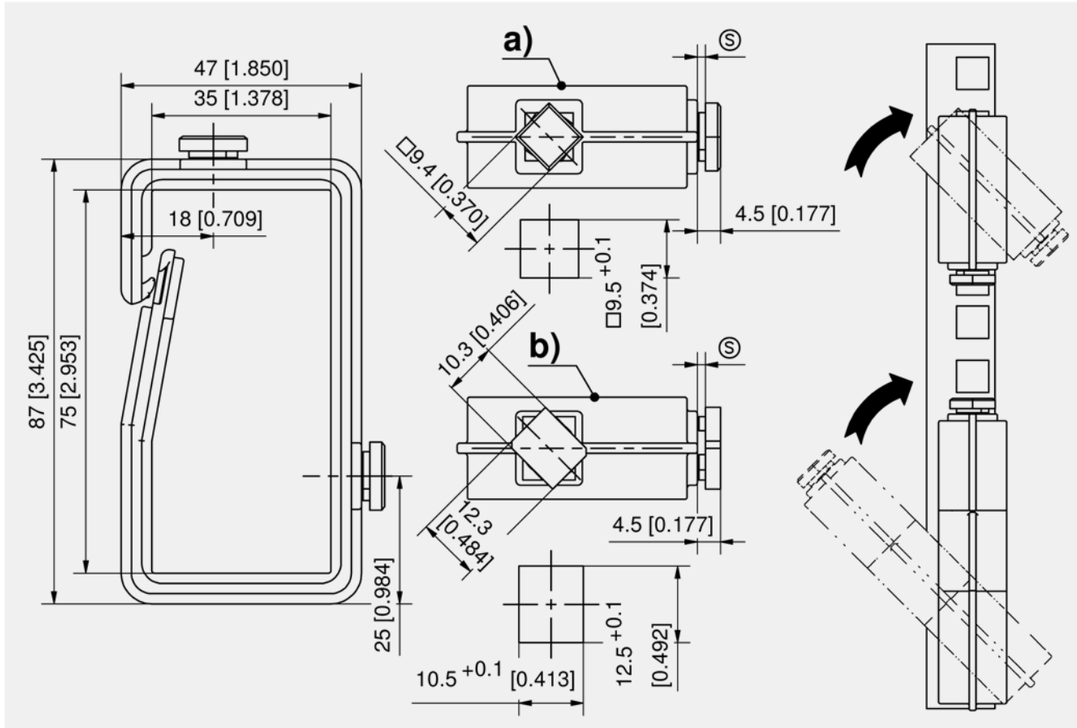

Wire catch

	Part Number	Cutout	Installation type	Delivery Unit
a)	214-0106.50-00013	□9,5	tool-less	100 pcs.
b)	214-0105.50-00013	12.5 x 10.5	tool-less	100 pcs.

Complementary Products

all product details ▸ on DIRAK.com
6-060

Cable Management Device □ 9.5

[6-062]

Advantages

- Cable management device for clipping onto a cutout of □ 9.5 with an additional DST fastener e.g. rail frame.
- Tool-less installation.
- Prevents the cable management device from turning.
- Can be opened or closed from the front in order to facilitate inserting or removing of the cables.
- Horizontal / vertical use.

Materials

- **Cable management device:** PA, black

Remarks

b) fastener

1. open

2. closed

The (S) dimension indicates the total thickness of the sheet metal panels

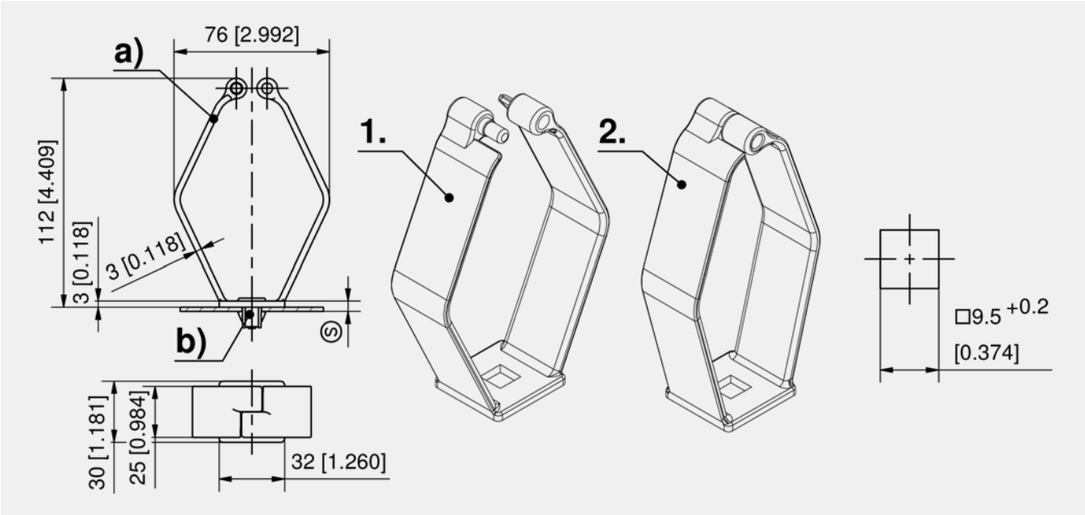

Cable management device

	Part Number	Clamping range (S)	Cutout	Installation type	Delivery Unit
a)	214-0108.51-00000	max. 6.4 mm	□ 9,5	tool-less	100 pcs.

	Accessories
b) 732	1-041.04DST **DST Fastener □ 9.5 without Leaf Spring**
b) 733	1-041.05DST **DST Fastener □ 9.5 with Leaf Spring**
788	6-065 **Clip-on Radius R30**

Complementary Products

◂ all product details on DIRAK.com
6-062

Cable Management Device □ 12.7

[6-061]

Advantages

- Clip-in cable management device for a cutout of □ 12.7, e.g. rail frame.
- Tool-less installation.
- The square base 12.5 of the cable management device prevents it from turning within the installation cutout.
- Can be opened or closed from the front in order to facilitate inserting or removing of the cables.
- Horizontal / vertical use.
- Seismic-proof according to GR-63-CORE, Issue 4.

Materials

- **Cable management device:** PA, black

Remarks

1. open

2. closed

The (S) dimension indicates the total thickness of the sheet metal panels

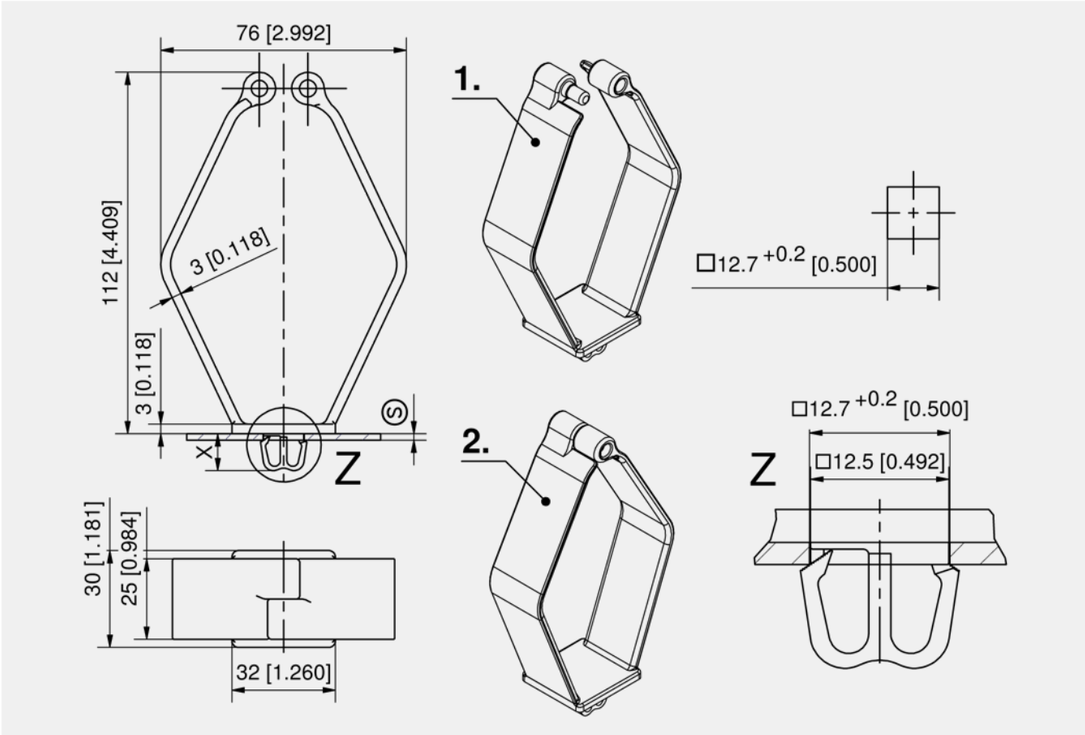

Cable management device

Part Number	Clamping range (S)	Cutout	Dimension X	Installation type	Delivery Unit
214-0108.51-20000	1.5 - 2 mm	□ 12.7	11.4 mm	tool-less	100 pcs.

	Accessories
788	6-065 **Clip-on Radius R30**

Complementary Products

all product details ▸ on DIRAK.com
6-061

Clip-on Radius R30

[6-065]

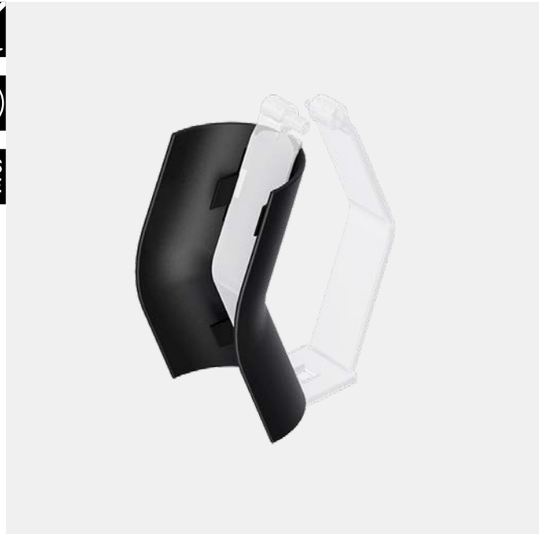

Advantages

- Clip-on radius for cable management device 6-061 and 6-062.
- Tool-less installation.
- Simplifies wiring of horizontal power, network and fiber optic cables in the cabinet.
- Easily guides cables around corners with gentle radius.
- Protects cables from damage and kinks during wiring.

Materials

- **Clip-on radius:** PA, black

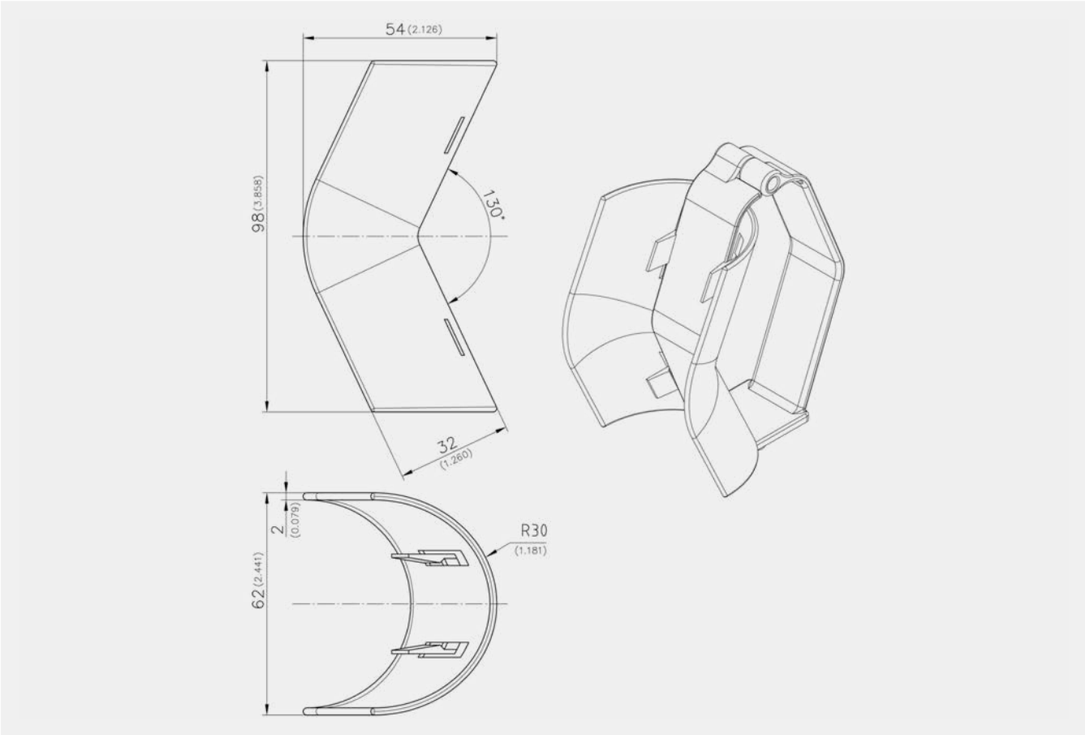

Clip-on radius for cable management device

Part Number	Installation type	Delivery Unit
214-0110.51-00000	tool-less	100 pcs.

	Accessories
787	6-061 **Cable Management Device ◻12.7**
786	6-062 **Cable Management Device ◻9.5**

Keys for the Railway Sector

See page 770

Index by Product System

Number	Page
1-020	726
1-030	398
1-034.01DST	729
1-034DST	728
1-035DST	730
1-040DST	737
1-041.01DST	727
1-041.02DST	735
1-041.03DST	731
1-041.04DST	732
1-041.05DST	733
1-041.06DST	734
1-041.09DST	736
1-042DST	738
1-043DST	739
1-044DST	740
1-045	38
1-045DST	744
1-046DST	743
1-048	36
1-050	30
1-050DST	166
1-053	34
1-054	37
1-056	33
1-057	32
1-058	149
1-059	148
1-060	399
1-067	40
1-068	410
1-069DST	411
1-070	50
1-070DST	412
1-071	51
1-072DST	413
1-075	134
1-077	52
1-078	54
1-079	58
1-080	66
1-081	64
1-081DST	62
1-082DST	135
1-083	72
1-083DST	74
1-085	44
1-085.01	42
1-085DST	46
1-086	48
1-086DST	49
1-092	68
1-095	70
1-099	136
1-100	76
1-100.01	75
1-100.02	84
1-100DST	137
1-101	150
1-102	154, 292
1-102.01	158
1-103	157
1-105	165
1-107	67
1-110	80
1-110.01	79
1-112	96
1-115	167
1-117	121
1-120	88
1-120.01	91
1-120DST	90
1-121	87
1-125	92
1-130	104
1-132	122
1-135	103
1-140	108
1-142	107
1-150	114
1-151	120
1-153	128
1-154	124
1-154.01	125
1-155.01	116
1-155.02	110
1-160	102
1-162	94

Number	Page
1-170	179, 283
1-180	180, 284
1-181	181, 285
1-181.01	181, 285
1-190	186, 290
1-191	184, 288
1-192	185, 289
1-193	187, 291
1-200	93
1-205	456
1-210	86
1-250	477
1-260	160
1-261	161
1-262	161
1-263	188
1-263.01	190
1-264	162
1-265	164, 478
1-270	170
1-270.01	172
1-270.02	171
1-274	168
1-275	169
1-300	213
1-350	192
1-351	194
1-400	204
1-400.01	206
1-405	208
1-410	207
1-415	476
1-430	210
1-430.01	212
1-450	200
1-450.01	202
1-451	198
1-500	400
1-501	401
1-651	127
2-040	138
2-060DST	418
2-070	224
2-075DST	227
2-077	228
2-077DST	229
2-078DST	222
2-079DST	223
2-080.01	226
2-080.02	232
2-085DST	230
2-090	233
2-090.01	234
2-090.02	235
2-090.03	236
2-090.04	237
2-090DST	238
2-091	301
2-092	244
2-100.01	252
2-100.02	260
2-102	254
2-104	255
2-110	262
2-120	250
2-126.01	256
2-126.02	264
2-126.03	258
2-126.04	266
2-140	304, 388
2-141	303
2-150	294
2-151	175, 295
2-151.01	178, 298
2-151.02	173, 300
2-151.03	178, 298
2-151.04	176, 296
2-300	268
2-340	270
2-340.01	307
2-400	272
2-400.01	308
3-011	302, 366
3-070	328
3-075	356
3-100	352
3-101	318
3-110	324

Number	Page
3-112	326
3-130	360
3-132.01	358
3-132.02	364
3-135	320
3-136	321
3-140	330
3-145	274, 350
3-149	332
3-150	334
3-150.01	336
3-150.02	338
3-150.03	339
3-150.04	340
3-150.05	341
3-150DST	342
3-152	377
3-155.02	333
3-160	367
3-161	368
3-162	370
3-163	375
3-163.01	374
3-165	371
3-166	372
3-170	380
3-171	382
3-171DST	383
3-310	347
3-311	348
3-400	246
3-400E	247
3-410	248
3-440	249
3-904	196
3-905	197
3-910	378
3-910DST	386
3-911	379
3-912	384
4-095	564
4-100	556
4-118	566
4-119	568
4-120	570
4-122	572
4-124	574
4-124.01	575
4-124.02	578
4-124DST	582
4-125	576
4-125DST	586
4-130	590
4-135	594
4-140	592
4-145	619
4-150	620
4-150DST	628
4-152	623
4-152DST	625
4-155	636
4-160	629
4-161	627
4-161DST	635
4-170	632
4-180	633
4-181	638
4-182	639
4-182.01DST	640
4-182.02DST	641
4-182.03DST	642
4-182.05	643
4-182.05DST	644
4-182.06DST	645
4-182.07DST	646
4-183	647
4-184.01DST	648
4-184.05DST	649
4-185	634
4-190	595
4-194	550
4-200	596
4-220	598
4-225	554
4-230	552
4-240	555
4-243	650
4-246	502

Number	Page
4-246DST	500
4-247	497
4-247.01	498
4-248	756
4-249	491
4-249.01DST	492
4-249.02DST	493
4-249.03DST	494
4-249.04DST	495
4-249.05DST	496
4-250	503
4-250DST	504
4-251	522
4-260	507
4-260.01	509
4-260DST	508
4-262	511
4-262.01	509
4-264	512
4-264.01	510
4-264DST	513
4-270	516
4-270DST	517
4-271	524
4-271DST	525
4-272	518
4-272.01	510
4-274	520
4-274DST	521
4-275	519
4-278	532
4-280	601
4-282	600
4-283	602
4-283DST	603
4-284	599
4-285	604
4-285.01	604
4-285DST	606
4-286	609
4-290	608
4-308	610
4-310	612
4-315	531
4-320	614
4-323	615
4-326	616
4-330	536
4-330DST	538
4-340	537
4-340DST	539
4-345	543
4-345DST	544
4-346	545
4-346DST	546
4-348	490
4-349DST	618
4-350	548
4-350DST	549
4-351	547
4-355	540
4-355DST	541
4-370	617
4-390	558
4-392	560
4-393	562
4-394	405, 563
4-400	514
4-401	515
4-402	534
4-701	654
4-702	655
4-703	656
4-708	652
4-709	653
5-100	664
5-110.01	665
5-110.02	680
5-120	666
5-125	667
5-127	668
5-127.01	665
5-130	670
5-131	671
5-140	672
5-149	673
5-150	674
5-151	675

DIRAK

Index by Product System

Number	Page
5-152	676
5-153	677
5-154	678
5-155	679
5-156	681
5-160	682
5-161	683
5-170	684
5-171	685
5-950.01	686
5-950.02	686
5-960DST	762
6-008	765
6-040	754
6-041	755
6-042	757
6-043	751
6-044	752
6-045	746
6-045.01	748
6-045.02	750
6-046	747
6-060	785
6-061	787
6-062	786
6-065	788
6-068	783
6-070	782
6-078	784
6-079DST	763
6-080DST	764
6-100	768
6-101	766
6-102	767
6-102.01	767
6-105	770
6-110	430
6-111	426
6-111.01	427
6-111.02	428
6-111.03	429
6-114	424
6-115	425
6-120	415
6-122	423
6-125DST	422
6-127	419
6-130	414
6-140	466
6-141	406
6-150	420
6-151	421
6-152	473
6-160	448
6-160.01	450
6-162	452
6-166	454
6-167	453
6-170	776
6-174	775
6-180	774
6-190	778
6-200	780
6-210	402
6-211	403
6-212	404
6-220	771
6-225	772
6-227	773
6-240	409
6-270	467
6-280	458
6-280.01	460
6-280.02	461
6-280.03	462
6-280.04	463
6-280.05	464
6-320.01	470
6-320.02	471
6-320.03	472
6-500	432
6-501	434
6-501.01	436
6-502	438
6-503	440
6-503.01	442
6-504	444
6-510	446

Number	Page
6-511	447
6-1000	694
6-1000.01	695
6-1001DST	696
6-1031	697
6-1102	698
6-1103	699
6-1104	700
6-1105	701
6-1106	702
6-1107	703
6-1108	704
6-1109	705
6-1110DST	130
6-1131	706
6-1133DST	708
6-1171DST	707
6-1200.01DST	709
6-1200.02DST	710
6-1300DST	711
6-1330DST	712
6-1380	713
6-1381	416
6-1410	714
6-1411DST	715
6-1500DST	719
6-1600.01	716
6-1600.02	718
6-1600DST	717
6-1680	474
7-030	354
7-034	322
7-035	325
7-040	362
7-041	376
7-050	31
7-060	344
7-061	345
7-065	240
7-066	242
7-069	306, 387
7-070	369
7-071	132
7-072	139
7-073.01	468
7-073.02	469
7-074	43
7-075	47
7-076	163
7-077	174
7-077.02	173, 300
7-078	56
7-079	60
7-080	83
7-080.01	78
7-081.01	142
7-081.01HD	143
7-081.02	144
7-081.02HD	145
7-081.03	146
7-081.03HD	147
7-081.04HD	141
7-082	152
7-083	82
7-084	89
7-085	123
7-085.01	105
7-086	98
7-087	100
7-090	112
7-095.01	119
7-095.02	113
7-100	126
7-103	118
7-104	129
7-105	156
7-105.01	159
7-106	182, 286
7-106.01	299
7-106.02	177, 297
7-106.03	183, 287
7-107	557
7-110_7-120	597
7-123	551
7-125	553
7-130	611
7-131	631
7-132	624

Number	Page
7-133	621
7-134	622
7-135	630
7-136	637
7-138	567
7-139	569
7-140	571
7-145	573
7-150	591
7-152DST	626
7-160	593
7-164DST	584
7-165	577
7-165.01	580
7-166	588
7-167	589
7-201	527
7-201.01	526
7-203	528
7-204	529
7-205	506
7-206	505
7-207	523
7-210	605
7-211	605
7-220	535
7-222	651
7-225	542
7-250	561
7-251	559
7-260	533
7-262	530
7-285DST	607
7-300	779
7-310	781
7-320	407
7-320.01	408
7-330	417
7-331	140
7-910	385
7-911	766
7-912	183, 287
7-913DST	742

Index by Part Number

Number	Page
100-0388.50-07701	69
100-0388.50-07702	69
100-0388.50-07703	69
100-0388.50-07704	69
100-0388.50-07705	69
100-0388.50-07707	69
100-0535.80-00000	159
100-0535.80-00002	159
100-0535.80-00004	159
100-0535.80-00006	159
100-0535.80-00008	159
100-0535.80-00010	159
100-0535.80-00012	159
100-0535.80-00014	159
100-0535.80-00016	159
100-0535.80-00018	159
100-0535.80-00020	159
100-0535.80-00022	159
100-0545.15-00000	158
100-0545.15-00002	158
100-0545.15-00004	158
100-0545.15-00006	158
100-0545.15-00008	158
100-0545.15-00010	158
100-0545.15-00012	158
100-0545.15-00014	158
100-0545.15-00016	158
100-0545.15-00018	158
100-0545.15-00020	158
100-0545.15-00022	158
100-0545.80-00000	159
100-0545.80-00002	159
100-0545.80-00004	159
100-0545.80-00006	159
100-0545.80-00008	159
100-0545.80-00010	159
100-0545.80-00012	159
100-0545.80-00014	159
100-0545.80-00016	159
100-0545.80-00018	159
100-0545.80-00020	159
100-0545.80-00022	159
100-9001.00-00000	65
100-9002.00-00000	65
100-9007.00-00000	67
100-9008.00-00000	67
100-9010.00-00000	102
100-9011.00-00000	102
100-9013.00-00000	65
100-9014.00-00000	65
100-9015.00-00000	65
100-9024.00-00000	83
100-9033.00-00000	189
100-9044.00-00000	73
100-9045.00-00000	73
100-9046.00-00000	73
100-9047.00-00000	73
100-9053.00-00000	75
100-9054.00-00000	75
100-9055.00-00000	75
100-9056.00-00000	75
100-9057.00-00000	75
100-9058.00-00000	75
100-9065.00-00000	79
100-9065.31-00036	79
100-9065.40-00036	79
100-9066.00-00036	79
100-9068.00-00036	79
100-9070.00-00036	79
100-9079.00-00000	174
100-9079.00-00001	174
100-9079.00-00002	174
100-9081.00-10030	91
100-9081.00-10050	91
100-9081.00-20030	91
100-9081.00-20050	91
100-9082.00-10030	91
100-9082.00-10050	91
100-9082.00-20030	91
100-9082.00-20050	91
100-9083.00-10030	91
100-9083.00-10050	91
100-9083.00-20030	91
100-9083.00-20050	91
100-9092.LH-00000	82
100-9092.RH-00000	82
100-9093.LH-00000	82
100-9093.RH-00000	82

Number	Page
100-9094.LH-00000	82
100-9094.RH-00000	82
100-9095.LH-00000	82
100-9095.RH-00000	82
100-9101.00-00000	65
100-9102.00-00000	65
100-9103.00-00000	65
100-9104.00-00000	65
100-9105.00-00000	65
100-9106.00-00000	65
100-9107.00-00000	65
100-9109.00-00000	65
100-9110.00-00000	65
100-9111.00-00000	65
100-9114.00-00000	65
100-9115.00-00000	151
100-9118.00-00000	153
100-9123.00-00000	65
100-9127.00-00000	151
100-9132.00-00000	65
100-9138.00-00006	73
100-9138.00-00007	73
100-9138.00-00008	73
100-9138.00-00009	73
100-9138.00-00010	73
100-9138.00-00011	73
100-9138.00-00012	73
100-9138.00-00013	73
100-9140.00-00006	73
100-9140.00-00007	73
100-9140.00-00008	73
100-9140.00-00009	73
100-9140.00-00010	73
100-9140.00-00011	73
100-9140.00-00012	73
100-9140.00-00013	73
100-9160.00-00000	153
100-9161.00-00000	153
100-9162.00-00000	153
100-9163.00-00000	153
100-9164.00-00000	153
100-9165.00-00000	153
100-9166.00-00000	151
100-9167.00-00000	151
100-9168.00-00000	153
100-9301.00-00000	92
100-9302.00-00000	92
100-9306.00-00000	107
100-9307.00-00000	107
100-9308.00-00000	107
100-9309.00-00001	107
100-9310.00-00000	122
100-9311.00-00000	122
100-9311.TX-00000	122
100-9313.00-00000	145
100-9313.00-01333	144
100-9313.00-99999	144
100-9314.00-01333	105
100-9314.00-09999	105
100-9315.00-00000	105
100-9401.00-00000	113
100-9402.00-00000	113
100-9403.00-00000	113
100-9404.00-00000	113
100-9405.00-00000	113
100-9406.00-00000	113
100-9407.00-00000	119
100-9408.00-00000	119
100-9409.00-00000	119
100-9410.00-00000	119
100-9411.00-00000	119
100-9412.00-00000	119
100-9413.00-00000	128
100-9416.00-00000	147
100-9416.00-01333	146
100-9416.00-99999	146
100-9503.00-00000	143
100-9504.00-00000	141
100-9505.00-00000	141
100-9508.00-00000	142
100-9508.00-00001	142
100-9601.00-00000	78
100-9611.00-00000	71
100-9612.00-00000	71
100-9613.00-00001	191
100-9613.00-00002	191
100-9614.00-00000	71
100-9755.00-00000	165

Number	Page
100-9801.00-11940	85
100-9801.00-12040	85
100-9801.00-12140	85
100-9801.00-12240	85
100-9801.00-12340	85
100-9801.00-12440	85
100-9801.00-12540	85
100-9802.00-11940	85
100-9802.00-12040	85
100-9802.00-12140	85
100-9802.00-12240	85
100-9802.00-12340	85
100-9802.00-12440	85
100-9802.00-12540	85
100-9803.00-11940	85
100-9803.00-12040	85
100-9803.00-12140	85
100-9803.00-12240	85
100-9803.00-12340	85
100-9803.00-12440	85
100-9803.00-12540	85
107-9001.00-00000	333
107-9002.00-00000	333
107-9003.00-00000	333
107-9004.00-00000	333
107-9005.00-00000	232
107-9006.00-00000	232
107-9007.00-00000	232
107-9008.00-00000	232
107-9010.00-00000	333
107-9012.00-00000	333
107-9013.00-00000	333
107-9015.00-00000	333
107-9016.00-00000	333
107-9017.00-00000	333
107-9018.00-00000	232
107-9020.00-00000	232
107-9021.00-00000	232
107-9023.00-00000	232
107-9024.00-00000	232
107-9025.00-00000	232
107-9201.00-00000	234
107-9202.00-00000	234
107-9203.00-00000	234
107-9204.00-00000	234
107-9205.00-00000	236
107-9206.00-00000	236
107-9206.00-00040	244
107-9208.00-00000	233
107-9208.00-00040	244
107-9209.00-00000	335
107-9225.00-00000	233
107-9226.00-00000	233
107-9227.00-00000	233
107-9228.00-00000	233
107-9230.00-00000	337
107-9231.00-00000	337
107-9234.00-00000	337
107-9235.00-00000	337
107-9238.00-00000	337
107-9239.00-00000	337
107-9242.00-00000	337
107-9243.00-00000	337
107-9246.00-00000	339
107-9247.00-00000	339
107-9250.00-00000	339
107-9251.00-00000	339
107-9254.00-00000	233
107-9255.00-00000	233
107-9256.00-00000	340
107-9257.00-00000	340
107-9258.00-00000	340
107-9259.00-00000	340
107-9260.00-00000	237
107-9261.00-00000	237
107-9262.00-00000	237
107-9263.00-00000	237
107-9264.00-00000	338
107-9265.00-00000	338
107-9266.00-00000	338
107-9267.00-00000	338
107-9268.00-00000	235
107-9269.00-00000	235
107-9270.00-00000	235
107-9271.00-00000	235
107-9273.00-00000	335
107-9274.00-00000	338
107-9276.00-00000	338

Number	Page
107-9277.00-00000	235
107-9278.00-00000	235
107-9279.00-00000	236
107-9282.00-00000	233
107-9282.00-00040	244
107-9284.00-00000	241
107-9285.00-00000	241
107-9286.00-00000	344
107-9287.00-00000	344
107-9401.00-00000	251
107-9402.00-00000	251
107-9403.00-00000	251
107-9404.00-00000	251
107-9405.00-00000	251
107-9406.00-00000	251
107-9407.00-00000	251
107-9408.00-00000	251
107-9421.00-00000	251
107-9422.00-00000	251
107-9423.00-00000	251
107-9424.00-00000	251
107-9425.00-00000	251
148-9102.00-00000	99
148-9103.00-00000	99
148-9107.00-00000	99
148-9108.00-00000	99
148-9152.00-00000	99
148-9153.00-00000	99
148-9157.00-00000	99
148-9158.00-00000	99
148-9302.00-00000	99
148-9303.00-00000	99
148-9307.00-00000	99
148-9308.00-00000	99
148-9352.00-00000	99
148-9353.00-00000	99
148-9357.00-00000	99
148-9358.00-00000	99
200-44LL.00-Hxxmm	161
200-54LL.00-Hxxmm	161
200-0211.07-07701	69
200-0402.00-00000	154, 292
200-0404.00-00000	154, 292
200-0406.00-00000	154, 292
200-0408.00-00000	154, 292
200-0410.00-00000	154, 292
200-0413.00-00000	154, 292
200-0414.00-00000	154, 292
200-0416.00-00000	154, 292
200-0418.00-00000	154, 292
200-0420.00-00000	154, 292
200-0422.00-00000	154, 292
200-0424.00-00000	154, 292
200-0425.00-00000	154, 292
200-0426.00-00000	154, 292
200-0428.00-00000	154, 292
200-0430.00-00000	154, 292
200-0432.00-00000	154, 292
200-0434.00-00000	154, 292
200-0435.00-00000	154, 292
200-0436.00-00000	154, 292
200-0438.00-00000	154, 292
200-0440.00-00000	154, 292
200-0442.00-00000	154, 292
200-0444.00-00000	154, 292
200-0445.00-00000	154, 292
200-0447.00-00000	154, 292
200-0450.00-00000	154, 292
200-0453.00-00000	154, 292
200-0455.00-00000	154, 292
200-0506.00-00000	156
200-0508.00-00000	156
200-0510.00-00000	156
200-0514.00-00000	156
200-0516.00-00000	156
200-0518.00-00000	156
200-0520.00-00000	156
200-0522.00-00000	156
200-0524.00-00000	156
200-0526.00-00000	156
200-0528.00-00000	156
200-0532.00-00000	156
200-0540.00-00000	156
200-0542.00-00000	156
200-0550.00-00000	156
200-0606.00-00000	155, 293
200-0608.00-00000	155, 293
200-0610.00-00000	155, 293

Index

Index by Part Number

Number	Page
200-0613.00-00000	155, 293
200-0614.00-00000	155, 293
200-0616.00-00000	155, 293
200-0618.00-00000	155, 293
200-0620.00-00000	155, 293
200-0622.00-00000	155, 293
200-0624.00-00000	155, 293
200-0625.00-00000	155, 293
200-0626.00-00000	155, 293
200-0628.00-00000	155, 293
200-0630.00-00000	155, 293
200-0635.00-00000	155, 293
200-0638.00-00000	155, 293
200-0640.00-00000	155, 293
200-0642.00-00000	155, 293
200-0644.00-00000	155, 293
200-0769.50-07718	69
200-0769.50-07720	69
200-0769.50-07722	69
200-0769.50-07724	69
200-0769.50-07728	69
200-0905.00-00000	139
200-1701.00-00000	160
200-1702.00-00000	160
200-1703.00-00000	160
200-2809.35-00000	169
200-2811.35-00000	189
200-2903.00-00000	93
200-2904.00-00000	93
200-3606.03-00000	185, 289
200-3616.54-00000	187, 291
200-3617.54-00000	187, 291
200-3618.54-00000	187, 291
200-3623.51-00000	186, 290
200-3624.51-00000	186, 290
200-3625.51-00000	186, 290
200-3626.51-00000	186, 290
200-3703.00-00000	477
200-3704.00-00000	477
200-3902.00-00000	168
200-4018.00-00000	161
200-4022.00-00000	161
200-4101.00-00000	170
200-4103.00-00000	170
200-4535.00-00018	156
200-4535.00-00020	156
200-4535.00-00022	156
200-4601.00-00000	169
200-4601.02-00000	169
200-4608.00-00000	169
200-4610.00-00000	169
200-4611.01-00000	169
200-4611.02-00000	169
200-4701.00-00000	169
200-4703.03-00000	172
200-4704.03-00000	172
200-4705.03-00000	172
200-4706.03-00000	172
200-5118.00-00000	161
200-5318.00-00000	71
200-5320.00-00000	71
200-5322.00-00000	71
200-5325.00-00000	71
200-5328.00-00000	71
200-5507.00-00045	457
200-5507.00-00060	457
200-5508.00-00045	457
200-5508.00-00060	457
200-5508.00-00065	457
200-8143.00-00000	160
200-8144.00-00000	160
200-9001.00-00000	77
200-9002.00-00000	77
200-9003.00-00000	71
200-9004.00-00000	77
200-9005.00-00000	77
200-9006.00-00000	77
200-9007.00-00000	77
200-9008.00-00000	77
200-9009.00-00000	77
200-9010.00-00000	77
200-9011.00-00000	81
200-9012.00-00000	81
200-9013.00-00000	81
200-9014.00-00000	81
200-9015.00-00000	81
200-9016.00-00000	81
200-9017.00-00000	81

Number	Page
200-9018.00-00000	81
200-9019.00-00000	81
200-9020.00-00000	81
200-9021.00-00000	81
200-9022.00-00000	81
200-9023.00-00000	81
200-9024.00-00000	81
200-9025.00-00000	81
200-9026.00-00000	81
200-9027.00-00000	81
200-9028.00-00000	81
200-9029.00-00000	81
200-9030.00-00000	81
200-9036.00-00000	102
200-9037.00-00000	102
200-9038.00-00000	93
200-9039.00-00000	93
200-9040.00-00000	93
200-9041.00-00000	93
200-9042.00-00000	93
200-9043.00-00000	83
200-9044.00-00000	71
200-9045.00-00000	77
200-9046.00-00000	77
200-9047.00-00000	93
200-9048.00-00000	77
200-9049.00-00000	77
200-9050.00-00000	77
200-9051.00-00000	77
200-9052.00-00000	77
200-9053.00-00000	77
200-9054.00-00000	77
200-9055.00-00000	77
200-9062.00-00000	77
200-9063.00-00000	77
200-9065.00-00000	86
200-9072.00-00000	83
200-9073.00-00000	83
200-9074.00-00000	83
200-9075.00-00000	83
200-9077.00-00000	71
200-9082.00-00000	121
200-9083.00-00000	121
200-9084.00-00000	121
200-9085.00-00000	121
200-9086.00-00000	86
200-9088.00-00000	97
200-9089.00-00000	97
200-9090.00-00000	97
200-9092.00-00000	97
200-9094.00-00000	97
200-9096.00-00000	97
200-9098.00-00000	97
200-9101.00-00000	151
200-9102.00-00000	151
200-9102.40-00000	150
200-9103.00-00000	151
200-9104.00-00000	151
200-9105.00-00000	151
200-9105.40-00000	150
200-9106.00-00000	151
200-9107.00-00000	151
200-9108.00-00000	151
200-9109.00-00000	151
200-9110.00-00000	151
200-9111.00-00000	151
200-9112.00-00000	151
200-9113.00-00000	151
200-9114.00-00000	151
200-9115.00-00000	151
200-9116.00-00000	151
200-9117.00-00000	151
200-9118.00-00000	151
200-9119.00-00000	153
200-9120.00-00000	153
200-9121.00-00000	153
200-9122.00-00000	153
200-9123.00-00000	153
200-9124.00-00000	153
200-9125.00-00000	153
200-9126.00-00000	151
200-9127.00-00000	151
200-9128.00-00000	151
200-9128.40-00000	150
200-9129.00-00000	151
200-9130.00-00000	151
200-9131.00-00000	151
200-9131.40-00000	150

Number	Page
200-9132.00-00000	151
200-9132.40-00000	150
200-9133.00-00000	151
200-9134.00-09137	167
200-9135.00-09137	167
200-9136.00-09137	167
200-9138.00-00000	86
200-9141.00-00000	151
200-9142.00-00000	151
200-9143.00-00000	151
200-9144.00-09137	167
200-9146.00-00000	153
200-9147.00-00000	151
200-9148.00-00000	151
200-9151.00-00000	153
200-9154.00-00000	151
200-9155.00-00000	151
200-9156.00-00000	151
200-9158.00-00000	151
200-9159.00-00000	151
200-9160.00-00000	151
200-9161.00-00000	151
200-9164.00-00000	151
200-9166.00-00000	151
200-9167.00-00000	151
200-9168.00-00000	151
200-9169.00-00000	151
200-9170.00-00000	151
200-9171.00-00000	151
200-9172.00-00000	151
200-9173.00-00000	151
200-9175.00-00000	86
200-9178.00-00000	151
200-9179.00-00000	153
200-9183.00-00000	86
200-9184.00-00000	151
200-9185.00-00000	151
200-9186.00-00000	151
200-9189.00-00000	153
200-9192.00-00000	153
200-9195.00-00000	153
200-9196.00-00000	151
200-9197.00-00000	151
200-9201.00-00000	88
200-9202.00-00000	88
200-9203.00-00000	88
200-9204.00-00000	88
200-9205.00-00000	88
200-9206.00-00000	88
200-9207.00-00000	88
200-9208.00-00000	88
200-9210.00-00000	87
200-9211.00-00000	87
200-9212.00-00000	87
200-9213.00-00000	87
200-9214.00-00000	87
200-9215.00-00000	87
200-9232.00-00000	89
200-9233.00-00000	89
200-9236.00-01333	89
200-9236.00-99999	89
200-9237.00-01333	89
200-9237.00-99999	89
200-9301.00-00000	104
200-9302.00-00000	104
200-9303.00-00000	104
200-9307.00-00000	109
200-9308.00-00000	109
200-9309.00-00000	109
200-9310.00-00000	110
200-9311.00-00000	110
200-9312.00-00000	110
200-9313.00-00000	110
200-9314.00-00000	110
200-9315.00-00000	110
200-9316.00-00000	110
200-9317.00-00000	110
200-9318.00-00000	110
200-9319.00-00000	109
200-9320.00-00000	109
200-9321.00-00000	109
200-9322.00-00000	111
200-9323.00-00000	111
200-9324.00-00000	111
200-9325.00-00000	111
200-9326.00-00000	111
200-9327.00-00000	111
200-9328.00-00000	111

Number	Page
200-9329.00-00000	111
200-9330.00-00000	111
200-9331.00-00000	109
200-9332.00-00000	109
200-9333.00-00000	109
200-9334.00-00000	111
200-9335.00-00000	111
200-9336.00-00000	111
200-9337.00-00000	111
200-9338.00-00000	111
200-9339.00-00000	111
200-9340.00-00000	111
200-9341.00-00000	111
200-9342.00-00000	111
200-9343.00-00000	111
200-9344.00-00000	111
200-9345.00-00000	111
200-9346.00-00000	110
200-9347.00-00000	110
200-9348.00-00000	110
200-9349.00-00000	111
200-9350.00-00000	111
200-9351.00-00000	111
200-9352.00-00000	111
200-9353.00-00000	111
200-9354.00-00000	111
200-9355.00-00000	111
200-9356.00-00000	111
200-9357.00-00000	111
200-9358.00-00000	111
200-9359.00-00000	111
200-9360.00-00000	111
200-9361.00-00000	111
200-9362.00-00000	111
200-9363.00-00000	111
200-9364.00-00000	122
200-9365.00-00000	122
200-9365.TX-00000	122
200-9368.00-00000	104
200-9369.00-00000	104
200-9370.00-00000	104
200-9371.00-00000	104
200-9372.00-00000	104
200-9373.00-00000	104
200-9374.00-00000	112
200-9375.00-00000	123
200-9392.00-00000	103
200-9393.00-00000	103
200-9394.00-00000	103
200-9395.00-00000	103
200-9396.00-00000	103
200-9398.00-00000	112
200-9399.00-00000	112
200-9401.00-00000	115
200-9402.00-00000	115
200-9403.00-00000	115
200-9404.00-00000	117
200-9405.00-00000	117
200-9406.00-00000	117
200-9407.00-00000	117
200-9408.00-00000	117
200-9409.00-00000	117
200-9410.00-00000	117
200-9411.00-00000	117
200-9412.00-00000	117
200-9414.00-00000	117
200-9415.00-00000	117
200-9416.00-00000	117
200-9418.00-00000	118
200-9419.00-00000	115
200-9420.00-00000	115
200-9427.00-00000	115
200-9428.00-00000	115
200-9429.00-00000	120
200-9431.00-00000	120
200-9432.00-00000	120
200-9433.00-00000	120
200-9435.00-00000	120
200-9436.00-00000	120
200-9437.00-00000	115
200-9438.00-00000	115
200-9439.00-00000	117
200-9440.00-00000	117
200-9441.00-00000	117
200-9442.00-00000	117
200-9443.00-00000	117
200-9444.00-00000	117
200-9445.00-00000	117

Index

Index by Part Number

Number	Page
200-9446.00-00000	117
200-9447.00-00000	117
200-9448.00-00000	117
200-9449.00-00000	117
200-9450.00-00000	117
200-9451.00-00000	117
200-9452.00-00000	117
200-9453.00-00000	117
200-9454.00-00000	117
200-9455.00-00000	117
200-9456.00-00000	117
200-9457.00-00000	117
200-9458.00-00000	117
200-9459.00-00000	117
200-9460.00-00000	117
200-9461.00-00000	117
200-9462.00-00000	117
200-9463.00-00000	124
200-9464.00-00000	124
200-9464.TX-00000	124
200-9475.00-00000	120
200-9481.00-00000	126
200-9483.00-00000	115
200-9485.00-00000	118
200-9486.00-00000	118
200-9488.00-00000	125
200-9488.TX-00000	125
200-9489.00-00000	125
200-9489.TX-00000	125
200-9490.00-00000	125
200-9490.TX-00000	125
200-9491.00-00000	124
200-9492.00-00000	124
200-9492.TX-00000	124
200-9493.00-00000	129
200-9504.00-00000	155, 293
200-9506.00-00000	155, 293
200-9508.00-00000	155, 293
200-9510.00-00000	155, 293
200-9513.00-00000	155, 293
200-9514.00-00000	155, 293
200-9516.00-00000	155, 293
200-9518.00-00000	155, 293
200-9520.00-00000	155, 293
200-9522.00-00000	155, 293
200-9524.00-00000	155, 293
200-9525.00-00000	155, 293
200-9526.00-00000	155, 293
200-9528.00-00000	155, 293
200-9530.00-00000	155, 293
200-9532.00-00000	155, 293
200-9534.00-00000	155, 293
200-9535.00-00000	155, 293
200-9536.00-00000	155, 293
200-9538.00-00000	155, 293
200-9540.00-00000	155, 293
200-9542.00-00000	155, 293
200-9544.00-00000	155, 293
200-9545.00-00000	155, 293
200-9547.00-00000	155, 293
200-9550.00-00000	155, 293
200-9594.00-00000	178, 298
200-9595.00-00000	175, 295
200-9596.00-00000	175, 295
200-9598.00-00000	299
200-9599.00-00000	155, 293
200-9601.00-00000	181, 285
200-9602.00-00000	477
200-9603.00-00000	183, 287
200-9604.00-00000	181, 285
200-9605.00-00000	162
200-9606.00-00000	162
200-9607.00-00000	162
200-9608.00-00000	162
200-9610.00-00000	65
200-9611.00-00000	65
200-9612.00-00000	65
200-9613.00-00000	65
200-9614.00-00000	65
200-9615.00-00000	185, 289
200-9618.00-00000	65
200-9621.00-00000	181, 285
200-9622.00-00000	157
200-9623.00-00000	183, 287
200-9629.00-00000	163
200-9630.00-00000	163
200-9632.00-00000	178, 298
200-9633.00-00000	184, 288

Number	Page
200-9637.00-00000	191
200-9638.00-00000	164, 478
200-9639.00-00000	164, 478
200-9845.00-00022	156
200-9845.00-00028	156
200-9899.00-00000	156
200-9916.00-00000	457
200-9918.00-00000	457
200-9920.00-00000	457
200-9922.00-00000	457
200-9926.00-00000	457
200-9928.00-00000	457
200-9930.00-00000	457
200-9932.00-00000	457
200-9935.00-00000	457
200-9936.00-00000	457
200-9937.00-00000	457
200-9938.00-00000	457
200-9939.00-00000	457
200-9940.00-00000	457
200-9941.00-00000	457
200-9942.00-00000	457
200-9947.00-00000	193
200-9948.00-DB3BL	195
200-9948.00-DB3CH	195
200-9948.00-DB5BL	195
200-9948.00-DB5CH	195
200-9948.00-SLOBL	195
200-9948.00-SLOCH	195
200-9948.00-SQ6BL	195
200-9948.00-SQ6CH	195
200-9948.00-SQ7BL	195
200-9948.00-SQ7CH	195
200-9948.00-SQ8BL	195
200-9948.00-SQ8CH	195
200-9948.00-TR7BL	195
200-9948.00-TR7CH	195
200-9948.00-TR8BL	195
200-9948.00-TR8CH	195
201-0102.00-00000	179, 283
201-0103.00-00000	179, 283
201-0104.00-00000	179, 283
201-0105.00-00000	179, 283
201-0106.00-00000	179, 283
201-0107.00-00000	179, 283
201-0108.00-00000	179, 283
201-0109.00-00000	179, 283
201-0110.00-00000	179, 283
201-0111.00-Lxxmm	179, 283
201-0111.04-Lxxmm	182, 286
201-0112.00-Lxxmm	179, 283
201-0112.04-Lxxmm	182, 286
201-0801.00-01000	307
201-1001.00-01000	307
201-9001.00-00000	180, 284
201-9002.00-00000	180, 284
201-9003.00-00000	180, 284
201-9004.00-00000	180, 284
201-9005.00-00000	180, 284
201-9006.00-Lxxmm	179, 283
201-9010.00-00000	182, 286
201-9011.00-00000	182, 286
201-9012.00-00000	182, 286
201-9013.00-00000	182, 286
201-9014.00-00000	182, 286
201-9015.00-00000	182, 286
201-9016.00-00000	182, 286
201-9020.00-00500	180, 284
201-9020.00-00700	180, 284
201-9020.00-00900	180, 284
201-9020.00-01100	180, 284
201-9020.00-Lxxmm	180, 284
201-9021.00-Lxxmm	179, 283
201-9026.00-Lxxmm	182, 286
201-9037.00-Lxxmm	182, 286
202-0506.00-00000	754
202-0508.00-00000	754
202-0606.00-00000	754
202-0606.04-00000	754
202-0607.00-00000	754
202-0608.00-00000	754
202-0608.04-00000	754
202-0610.00-00000	754
202-0610.04-00000	754
202-0616.00-00000	754
202-0616.04-00000	754
202-0620.00-00000	754
202-0625.00-00000	754

Number	Page
202-0630.00-00000	754
202-0635.00-00000	754
202-0640.00-00000	754
202-0650.00-00000	754
202-0810.00-00000	754
202-1103.15-00530	751
203-0655.61-00000	751
203-0901.03-00000	69
203-1901.06-00095	746, 747
203-1902.15-00006	746
203-1904.15-00006	747
203-9002.00-00000	746
204-0102.00-00000	769
204-0103.00-00000	769
204-0104.00-00000	769
204-0105.00-00000	769
204-0106.00-00000	769
204-0107.00-00000	769
204-0108.00-00000	769
204-0109.00-00000	769
204-0110.00-00000	769
204-0111.00-00000	769
204-0112.00-00000	769
204-0113.00-00000	769
204-0116.00-00000	769
204-0117.00-00000	769
204-0119.00-00000	769
204-0120.00-00000	769
204-0121.00-00000	769
204-0126.00-00000	770
204-0133.30-00000	769
204-0134.30-00000	769
204-0139.00-00000	769
204-0140.00-00000	767
204-0140.39-05010	767
204-0146.51-05015	767
204-0301.00-00000	769
204-0302.42-00000	769
204-0401.03-00000	769
204-0402.03-00000	769
204-0403.03-00000	769
204-0404.03-00000	769
204-0405.03-00000	769
204-0406.03-00000	769
204-0407.03-00000	769
204-0408.03-00000	769
204-0409.03-00000	769
204-0501.00-00000	769
204-0502.00-00000	769
204-0701.07-07500	766
204-0702.80-00000	770
207-2506.80-00000	241
207-2706.00-00000	262
207-2707.00-00016	138
207-3501.00-00000	262
207-3605.90-00000	139
207-7043.00-00000	253
207-7080.00-00000	253
207-7081.00-00000	253
207-9001.00-00000	261
207-9002.00-00000	261
207-9003.00-00000	261
207-9004.00-00000	261
207-9006.00-00000	261
207-9008.00-00000	261
207-9009.00-00000	261
207-9023.00-00000	262
207-9024.00-00000	262
207-9030.00-00000	262
207-9034.00-00000	262
207-9035.00-00000	269
207-9036.00-00000	269
207-9037.00-00000	269
207-9038.00-00000	269
207-9039.00-00000	269
207-9040.00-00000	269
207-9041.00-00000	269
207-9042.00-00000	269
207-9043.00-00000	269
207-9044.00-00000	269
207-9045.00-00000	269
207-9046.00-00000	269
207-9052.00-00000	272
207-9053.00-00000	272
207-9054.00-00000	272
207-9055.00-00000	272
207-9056.00-00000	271
207-9057.00-00000	271

Number	Page
207-9058.00-00000	271
207-9059.00-00000	271
207-9061.00-00000	269
207-9062.00-00000	269
207-9063.00-00000	269
207-9064.00-00000	269
207-9101.00-00000	253
207-9102.00-00000	253
207-9103.00-00000	253
207-9109.00-00000	253
207-9110.00-00000	253
207-9111.00-00000	253
207-9112.00-00000	253
207-9129.00-00000	254
207-9136.00-07038	255
207-9201.00-00000	335
207-9202.00-00000	335
207-9203.00-00000	335
207-9204.00-00000	335
207-9205.00-00000	335
207-9206.00-00000	335
207-9207.00-00000	335
207-9208.00-00000	335
207-9209.00-00000	335
207-9214.00-00000	341
207-9215.00-00000	341
207-9218.00-00000	341
207-9219.00-00000	341
207-9220.00-00000	341
207-9238.00-00000	234
207-9238.00-00040	244
207-9239.00-00000	234
207-9240.00-00000	234
207-9241.00-00000	234
207-9244.00-00000	236
207-9244.00-00040	244
207-9262.00-00000	337
207-9263.00-00000	337
207-9264.00-00000	337
207-9265.00-00000	337
207-9266.00-00000	337
207-9267.00-00000	337
207-9268.00-00000	337
207-9269.00-00000	337
207-9270.00-00000	339
207-9271.00-00000	339
207-9272.00-00000	339
207-9273.00-00000	339
207-9282.00-00000	233
207-9282.00-00040	244
207-9283.00-00000	233
207-9284.00-00000	233
207-9292.00-00000	344
207-9293.00-00000	344
207-9294.00-00000	241
207-9295.00-00000	241
207-9296.00-00000	335
207-9297.00-00000	335
207-9298.00-00000	335
207-9311.00-00000	261
207-9312.00-00000	261
207-9313.00-00000	261
207-9314.00-00000	261
207-9315.00-00000	272
207-9316.00-00000	272
207-9317.00-00000	272
207-9318.00-00000	272
207-9319.00-00000	271
207-9320.00-00000	271
207-9321.00-00000	271
207-9322.00-00000	271
207-9323.00-00000	269
207-9324.00-00000	269
207-9325.00-00000	269
207-9326.00-00000	269
207-9327.00-00000	269
207-9328.00-00000	269
207-9329.00-00000	269
207-9330.00-00000	269
207-9331.00-00000	269
207-9332.00-00000	269
207-9333.00-00000	269
207-9334.00-00000	269
207-9335.00-00000	269
207-9336.00-00000	269
207-9337.00-00000	269
207-9338.00-00000	269
207-9346.00-00000	262

DIRAK

Index by Part Number

Number	Page
207-9414.00-00000	265
207-9416.00-00000	272
207-9417.00-00000	267
207-9418.00-00000	267
207-9504.00-00000	294
207-9506.00-00000	294
207-9508.00-00000	294
207-9510.00-00000	294
207-9513.00-00000	294
207-9514.00-00000	294
207-9516.00-00000	294
207-9518.00-00000	294
207-9520.00-00000	294
207-9522.00-00000	294
207-9524.00-00000	294
207-9525.00-00000	294
207-9526.00-00000	294
207-9528.00-00000	294
207-9530.00-00000	294
207-9532.00-00000	294
207-9534.00-00000	294
207-9535.00-00000	294
207-9536.00-00000	294
207-9538.00-00000	294
207-9540.00-00000	294
207-9542.00-00000	294
207-9544.00-00000	294
207-9545.00-00000	294
207-9547.00-00000	294
207-9550.00-00000	294
207-9589.00-00000	176, 296
207-9590.00-00000	177, 297
207-9592.00-00000	177, 297
207-9594.00-00000	299
207-9595.00-00000	175, 295
207-9596.00-00000	175, 295
207-9598.00-00000	241
207-9599.00-00000	294
207-9614.00-00000	257
207-9617.00-00000	259
207-9618.00-00000	259
207-9702.00-00000	301
207-9703.00-00000	377
207-9845.00-00022	241
207-9845.00-00028	241
208-0522.03-00000	321
208-0523.03-00000	321
208-0526.52-00000	321
208-0905.04-01000	369
208-0905.04-Lxxmm	369
208-0905.15-00800	368
208-0905.15-01000	368
208-0905.15-01200	368
208-0905.15-Lxxmm	368
208-0934.00-Lxxmm	368
208-0934.04-Lxxmm	369
208-0942.00-00000	349
208-0943.00-00000	349
208-0944.00-00000	349
208-0945.00-00000	349
208-1063.15-Lxxmm	383
208-1206.93-00000	302, 366
208-1401.00-00000	384
208-1402.00-00000	384
208-1424.00-00000	349
208-1439.95-00000	385
208-1446.50-00000	384
208-1453.50-00000	197
208-1501.03-00000	378
208-1509.03-00000	378
208-1517.03-00000	378
208-1523.54-00000	379
208-1528.54-00000	196
208-2402.03-00023	370
208-2403.03-00018	370
208-2403.03-00020	370
208-2403.03-00025	370
208-9001.00-00000	353
208-9002.00-00000	361
208-9003.00-00000	361
208-9008.00-00000	353
208-9013.00-00000	353
208-9014.00-00000	353
208-9015.00-00000	365
208-9016.00-00000	359
208-9021.00-00000	357
208-9022.00-00000	357
208-9024.00-00000	363

Number	Page
208-9025.00-00000	355
208-9051.00-00000	353
208-9052.00-00000	361
208-9053.00-00000	361
208-9058.00-00000	353
208-9063.00-00000	353
208-9064.00-00000	353
208-9101.00-00000	381
208-9102.00-00000	381
208-9107.00-00000	381
208-9108.00-00000	381
208-9201.00-00000	319
208-9202.00-00000	319
208-9203.00-00000	319
208-9204.00-00000	319
208-9205.00-00000	319
208-9206.00-00000	319
208-9207.00-00000	319
208-9208.00-00000	319
208-9209.00-00000	319
208-9210.00-00000	319
208-9212.00-00000	319
208-9217.00-00000	319
208-9218.00-00000	323
208-9219.00-00000	323
208-9220.00-00000	323
208-9221.00-00000	323
208-9222.00-00000	323
208-9223.00-00000	323
208-9301.00-00000	319
208-9302.00-00000	319
208-9304.00-00000	323
208-9305.00-00000	320
208-9306.00-00000	138
208-9307.00-00000	138
208-9308.00-00000	138
208-9310.00-00000	323
208-9312.00-00000	320
208-9401.00-00000	374
208-9402.00-00000	374
208-9403.00-00000	375
208-9404.00-00000	374
208-9406.00-00000	376
208-9408.00-00000	374
208-9409.00-00000	375
208-9501.00-00000	319
208-9502.00-00000	319
208-9503.00-00000	319
208-9504.00-00000	323
208-9601.00-00000	324
208-9602.00-00000	324
208-9603.00-00000	324
208-9604.00-00000	324
208-9605.00-00000	324
208-9606.00-00000	324
208-9607.00-00000	324
208-9608.00-00000	324
208-9609.00-00000	324
208-9610.00-00000	330
208-9611.00-00000	330
208-9612.00-00000	330
208-9613.00-00000	330
208-9614.00-00000	330
208-9615.00-00000	330
208-9616.00-00000	330
208-9617.00-00000	330
208-9618.00-00000	330
208-9634.00-00000	325
208-9635.00-00000	325
208-9638.00-00000	139
208-9648.00-00000	326
208-9650.00-00000	325
208-9651.00-00000	325
208-9652.00-00000	325
208-9653.00-00000	325
208-9654.00-00000	326
208-9655.00-00000	326
208-9701.00-Lxxmm	367
208-9715.00-Lxxmm	371
208-9733.00-Lxxmm	367
208-9790.00-00000	378
208-9791.00-00000	378
208-9801.00-00000	195
208-9802.00-00000	195
208-9837.00-Lxxmm	383
208-9844.00-Lxxmm	382
208-9902.00-00020	371
208-9902.00-00026	371

Number	Page
208-9932.00-00000	372
209-0118.00-00000	664
209-0120.00-00000	664
209-0122.00-00000	664
209-0124.00-00000	664
209-0126.00-00000	664
209-0128.00-00000	664
209-0201.00-00000	674
209-0201.1A-00000	674
209-0202.00-00000	675
209-0202.1A-00000	675
209-0203.00-00000	675
209-0204.00-00000	675
209-0205.00-00000	674
209-0205.1A-00000	674
209-0206.00-00000	675
209-0206.1A-00000	675
209-0211.00-00000	674
209-0212.00-00000	678
209-0213.00-00000	677
209-0214.00-00000	678
209-0215.00-00000	677
209-0216.00-00000	677
209-0217.00-00000	678
209-0218.00-00000	678
209-0219.00-00000	676
209-0220.00-00000	674
209-0221.00-00000	676
209-0222.00-00000	677
209-0226.00-00000	678
209-0227.00-00000	677
209-0228.00-00000	675
209-0229.00-00000	675
209-0230.00-00000	675
209-0237.00-00000	676
209-0238.00-00000	677
209-0239.00-00000	676
209-0240.00-00000	674
209-0246.00-00000	674
209-0275.00-00000	676
209-0301.00-00000	665
209-0302.00-00000	665
209-0401.00-00000	672
209-0402.00-00000	672
209-0406.00-00000	672
209-0407.00-00000	672
209-0501.00-00000	670
209-0502.00-00000	670
209-0503.00-00000	670
209-0504.00-00000	671
209-0508.00-00000	670
209-0509.00-00000	670
209-0510.00-00000	670
209-0511.00-00000	670
209-0512.00-00000	670
209-0513.00-00000	670
209-0514.00-00000	670
209-0515.00-00000	670
209-0516.00-00000	670
209-0517.00-00000	670
209-0518.00-00000	670
209-0519.00-00000	670
209-0520.00-00000	670
209-0521.00-00000	670
209-0522.00-00000	670
209-0523.00-00000	670
209-0524.00-00000	670
209-0525.00-00000	670
209-0704.00-00000	679
209-0801.00-00000	682
209-0802.00-00000	682
209-0803.00-00000	682
209-0805.00-00000	682
209-0807.00-00000	682
209-0808.00-00000	682
209-0810.00-00000	682
209-0811.00-00000	682
209-0812.00-00000	682
209-0813.00-00000	682
209-0814.00-00000	682
209-0815.00-00000	682
209-0816.00-00000	682
209-0817.00-00000	682
209-0818.00-00000	682
209-0819.00-00000	682
209-0820.00-00000	682
209-0824.00-00000	683
209-0901.00-00000	680

Number	Page
209-0902.00-00000	680
209-0903.00-00000	680
209-0904.00-00000	680
209-1001.00-00000	684
209-1002.00-00000	684
209-1003.00-00000	684
209-1203.00-00000	679
209-1204.00-00050	681
209-1301.00-L2006	673
209-1302.00-L2006	673
209-1305.00-00000	673
209-1331.00-00012	673
209-1331.00-00022	673
209-1331.00-00025	673
209-1401.00-00000	665
209-2201.00-00000	674
209-2202.00-00000	675
209-3001.00-00000	686
209-3002.00-00000	686
209-3003.00-00000	686
209-3004.00-00000	686
209-3101.00-00000	686
209-3102.00-00000	686
209-4204.52-00000	685
209-7054.00-00000	684
210-9001.00-00000	608
210-9002.00-00000	608
210-9003.00-00000	608
211-0401.03-00000	305, 389
211-8057.00-00000	305, 389
211-9003.00-00000	304, 388
211-9004.00-00000	304, 388
211-9101.00-00000	305, 389
211-9102.00-00000	305, 389
211-9106.00-00000	305, 389
211-9107.00-00000	305, 389
211-9113.00-00000	305, 389
211-9115.00-00000	305, 389
211-9201.00-00000	305, 389
211-9202.00-00000	305, 389
211-9203.00-00000	305, 389
211-9203.00-00001	305, 389
211-9204.00-00000	305, 389
211-9204.00-00001	305, 389
211-9205.00-00000	305, 389
211-9206.00-00000	305, 389
211-9206.00-00001	305, 389
211-9207.00-00000	305, 389
211-9207.00-00001	305, 389
211-9208.00-00000	305, 389
211-9208.00-00001	305, 389
211-9209.00-00000	305, 389
211-9209.00-00001	305, 389
211-9210.00-00000	305, 389
211-9211.00-00000	305, 389
211-9212.00-00000	305, 389
211-9212.00-00001	305, 389
211-9213.00-00000	305, 389
211-9214.00-00000	305, 389
211-9215.00-00000	305, 389
211-9216.00-00000	305, 389
211-9217.00-00000	305, 389
211-9218.00-00000	305, 389
211-9219.00-00000	305, 389
211-9220.00-00000	305, 389
211-9226.00-00000	306, 387
211-9227.00-00000	306, 387
211-9228.00-00000	306, 387
211-9229.00-00000	306, 387
211-9230.00-00000	306, 387
211-9231.00-00000	306, 387
211-9232.00-00000	306, 387
211-9233.00-00000	306, 387
211-9235.00-00000	305, 389
211-9238.00-00000	306, 387
211-9242.00-00000	306, 387
211-9244.00-00000	305, 389
211-9301.00-00000	305, 389
211-9302.00-00000	305, 389
211-9501.00-00000	303
211-9502.00-00000	303
211-9503.00-00000	303
211-9504.00-00000	303
211-9505.00-00000	303
211-9506.00-00000	303
211-9507.00-00000	303
211-9508.00-00000	303
211-9509.00-00000	303

Index by Part Number

Number	Page
211-9510.00-00000	303
211-9511.00-00000	303
211-9512.00-00000	303
211-9513.00-00000	303
211-9514.00-00000	303
211-9515.00-00000	303
211-9516.00-00000	303
211-9517.00-00000	303
211-9518.00-00000	303
211-9519.00-00000	303
211-9520.00-00000	303
212-9001.00-00000	620
212-9002.00-00000	620
212-9003.00-00000	620
212-9004.00-00000	620
212-9005.00-00000	620
212-9006.00-00000	620
212-9007.00-00000	629
212-9008.00-00000	629
212-9009.00-00000	629
212-9010.00-00000	629
212-9011.00-00000	629
212-9012.00-00000	629
212-9013.00-00000	632
212-9014.00-00000	632
212-9015.00-00000	633
212-9016.00-00000	633
212-9017.00-00000	633
212-9018.00-00000	633
212-9019.00-00000	632
212-9020.00-00000	632
212-9021.00-00000	633
212-9022.00-00000	633
212-9023.00-00000	633
212-9024.00-00000	633
212-9025.00-00000	627
212-9026.00-00000	627
212-9027.00-00000	627
212-9028.00-00000	627
212-9033.00-00000	627
212-9034.00-00000	627
212-9035.00-00000	627
212-9036.00-00000	627
212-9037.00-00000	634
212-9038.00-00000	634
212-9042.00-00000	647
212-9043.00-00000	647
212-9044.00-00000	647
212-9045.00-00000	647
212-9046.00-00000	647
212-9047.00-00000	647
212-9048.00-00000	647
212-9049.00-00000	647
212-9050.00-00000	634
212-9056.00-00000	623
212-9057.00-00000	623
212-9058.00-00000	623
212-9059.00-00000	623
212-9060.00-00000	623
212-9061.00-00000	623
212-9062.00-00000	623
212-9063.00-00000	623
212-9064.00-00000	623
212-9065.00-00000	632
212-9082.00-00000	647
212-9083.00-00000	647
212-9085.00-00000	643
212-9088.00-00000	634
212-9092.00-00000	636
212-9093.00-00000	631
212-9094.00-00000	631
212-9101.00-00000	619
212-9103.00-00000	619
212-9201.00-00000	622
212-9202.00-00000	622
212-9203.00-00000	622
212-9204.00-00000	622
212-9302.00-00000	639
212-9303.00-00000	639
212-9308.00-00000	638
212-9501.00-00000	620
212-9502.00-00000	620
212-9503.00-00000	620
212-9504.00-00000	620
212-9505.00-00000	620
212-9506.00-00000	620
212-9507.00-00000	629
212-9508.00-00000	629

Number	Page
212-9509.00-00000	629
212-9510.00-00000	629
212-9511.00-00000	629
212-9512.00-00000	629
212-9513.00-00000	632
212-9514.00-00000	632
212-9519.00-00000	632
212-9520.00-00000	632
212-9527.00-00000	627
212-9528.00-00000	627
212-9535.00-00000	627
212-9536.00-00000	627
212-9701.00-00000	630
212-9702.00-00000	630
212-9703.00-00000	621
212-9704.00-00000	621
212-9705.00-00000	624
212-9706.00-00000	624
212-9707.00-00000	624
212-9712.00-00000	637
212-9713.00-00000	621
212-9714.00-00000	624
212-9715.00-00000	637
212-9716.00-00000	624
213-0101.03-00000	716
213-0102.03-00000	716
213-0103.03-00000	718
213-0104.03-00000	718
213-0107.03-00000	716
213-0201.03-00000	697
213-0202.03-00000	697
213-0203.03-00000	697
213-0204.03-00000	697
213-0302.31-00000	706
213-0302.33-00000	706
213-0303.31-00000	706
213-0303.33-00000	706
213-0510.96-00285	703
213-0511.96-00030	705
213-0511.96-00064	705
213-0512.96-00096	704
213-0512.96-00128	704
213-0513.96-00112	700
213-0513.96-00128	700
213-0513.96-00160	700
213-0514.96-00112	698
213-0514.96-00128	698
213-0514.96-00160	698
213-0515.96-00128	702
213-0515.96-00160	702
213-0515.96-00192	702
213-0515.96-00350	702
213-0515.96-00500	702
213-0516.96-00100	701
213-0517.96-00100	699
213-0703.03-00000	714
213-0705.51-00000	714
213-9001.00-00060	713
213-9001.00-00080	713
213-9002.00-00060	713
213-9002.00-00080	713
213-9101.00-00060	713
213-9101.00-00080	713
213-9102.00-00060	713
213-9102.00-00080	713
213-9201.00-00000	694
213-9202.00-00000	694
213-9203.00-00000	694
213-9204.00-00000	694
213-9205.00-00000	694
213-9206.00-00000	694
213-9207.00-00000	694
213-9401.00-00000	416
213-9402.00-00000	416
213-9403.00-00000	416
214-0103.03-00000	466
214-0105.50-00013	785
214-0106.50-00013	785
214-0107.51-00000	782
214-0107.51-10000	782
214-0108.51-00000	786
214-0108.51-20000	787
214-0109.51-00000	726
214-0109.51-10000	726
214-0109.51-20000	726
214-0109.51-30000	726
214-0110.51-00000	788
214-0111.51-00000	783

Number	Page
214-0112.00-00050	784
214-9002.00-00000	466
214-9002.00-00001	466
214-9003.00-00000	466
214-9003.00-00001	466
214-9101.00-00000	406
214-9101.00-00510	406
214-9102.00-00000	406
214-9102.00-00620	406
214-9102.00-00625	406
214-9103.00-00000	406
214-9103.00-00820	406
214-9103.00-00825	406
214-9103.00-00830	406
214-9104.00-00000	406
214-9104.00-01020	406
214-9104.00-01025	406
214-9104.00-01030	406
215-0101.00-00000	201
215-0101.00-00001	203
215-0201.00-00000	201
215-0213.00-00000	199
215-0401.00-00000	201
215-0406.00-00000	199
215-0501.00-00000	201
215-9001.00-00000	201
215-9002.00-00000	201
215-9003.00-00000	203
215-9004.00-00000	203
215-9005.00-00000	201
215-9101.00-00000	201
215-9201.00-00000	199
216-9001.00-00000	570
216-9002.00-00000	570
216-9003.00-00000	590
216-9004.00-00000	592
216-9005.00-00000	572
216-9008.00-00000	594
216-9009.00-00000	570
216-9009.00-00001	570
216-9010.00-00000	570
216-9010.00-00001	570
216-9011.00-00000	590
216-9011.00-00001	590
216-9012.00-00000	592
216-9012.00-00001	592
216-9013.00-00000	594
216-9015.00-00000	566
216-9018.00-00000	570
216-9018.00-00001	570
216-9019.00-00000	570
216-9019.00-00001	570
216-9020.00-00000	570
216-9021.00-00000	570
216-9022.00-00000	572
216-9022.00-00001	572
216-9024.00-00000	590
216-9025.00-00000	590
216-9025.00-00001	590
216-9028.00-00000	592
216-9028.00-00001	592
216-9029.00-00000	592
216-9032.00-00000	568
216-9033.00-00000	569
216-9035.00-00000	566
216-9101.00-00000	571
216-9102.00-00000	571
216-9103.00-00000	591
216-9104.00-00000	593
216-9105.00-00000	591
216-9106.00-00000	593
216-9109.00-00000	571
216-9109.00-00001	571
216-9110.00-00000	571
216-9110.00-00001	571
216-9111.00-00000	591
216-9111.00-00001	591
216-9112.00-00001	593
216-9112.00-00002	593
216-9113.00-00000	567
216-9115.00-00000	573
216-9116.00-00000	573
216-9116.00-00001	573
216-9120.00-00000	591
216-9121.00-00001	571
216-9121.00-00002	571
216-9122.00-00000	593
216-9123.00-00000	591

Number	Page
216-9124.00-00000	593
216-9125.00-00000	591
216-9125.00-00001	591
216-9126.00-00000	593
216-9126.00-00001	593
216-9128.00-00000	567
217-1301.52-07500	547
217-9001.00-00000	614
217-9002.00-00000	614
217-9101.00-00000	536
217-9102.00-00000	536
217-9103.00-00000	536
217-9104.00-00000	536
217-9105.00-00000	537
217-9106.00-00000	537
217-9107.00-00000	537
217-9108.00-00000	537
217-9109.00-00000	536
217-9110.00-00000	536
217-9111.00-00000	537
217-9112.00-00000	537
217-9116.00-00000	536
217-9117.00-00000	536
217-9118.00-00000	537
217-9119.00-00000	537
217-9201.00-00000	615
217-9202.00-00000	615
217-9203.00-00000	615
217-9204.00-00000	615
217-9301.00-00000	616
217-9302.00-00000	616
217-9303.00-00000	616
217-9304.00-00000	616
217-9402.00-00000	548
217-9403.00-00000	548
217-9404.00-00000	548
217-9405.00-00000	548
217-9406.00-00000	548
217-9407.00-00000	548
217-9408.00-00000	548
217-9409.00-00000	548
217-9410.00-00000	548
217-9411.00-00000	548
217-9412.00-00000	548
217-9413.00-00000	548
217-9414.00-00000	547
217-9415.00-00000	547
217-9416.00-00000	547
217-9417.00-00000	547
217-9501.00-00000	540
217-9503.00-00000	543
217-9504.00-00000	543
217-9505.00-00000	543
217-9506.00-00000	543
217-9507.00-00000	545
217-9508.00-00000	545
217-9509.00-00000	545
217-9510.00-00000	545
217-9601.00-00000	535
217-9605.00-00000	542
218-0907.15-00000	757
218-0908.15-00000	757
218-0909.15-00000	757
218-0910.15-00000	757
218-9001.00-00000	503
218-9002.00-00000	503
218-9003.00-00000	503
218-9004.00-00000	503
218-9010.00-00000	502
218-9011.00-00000	502
218-9012.00-00015	505
218-9012.00-00020	505
218-9013.00-00015	505
218-9013.00-00020	505
218-9101.00-00000	507
218-9102.00-00000	507
218-9103.00-00000	507
218-9103.00-00002	509
218-9104.00-00000	507
218-9104.00-00002	509
218-9105.00-00000	511
218-9106.00-00000	511
218-9107.00-00000	511
218-9107.00-00002	509
218-9108.00-00000	511
218-9108.00-00002	509
218-9109.00-00000	512
218-9109.00-00002	510

Index by Part Number

Number	Page
218-9110.00-00000	512
218-9110.00-00002	510
218-9119.00-00000	506
218-9124.00-00000	512
218-9125.00-00000	512
218-9201.00-00000	516
218-9202.00-00000	516
218-9203.00-00000	516
218-9204.00-00000	516
218-9205.00-00000	518
218-9205.00-00002	510
218-9206.00-00000	518
218-9206.00-00002	510
218-9207.00-00000	518
218-9207.00-00002	510
218-9208.00-00000	518
218-9208.00-00002	510
218-9209.00-00000	520
218-9210.00-00000	520
218-9211.00-00000	520
218-9212.00-00000	520
218-9213.00-00000	650
218-9216.00-00000	519
218-9217.00-00000	519
218-9218.00-00000	519
218-9219.00-00000	519
218-9220.00-00000	514
218-9241.00-00000	515
218-9309.00-00000	527
218-9310.00-00000	527
218-9311.00-00000	527
218-9312.00-00000	528
218-9313.00-00000	528
218-9314.00-00000	526
218-9315.00-00000	526
218-9316.00-00000	526
218-9402.00-00000	503
218-9412.00-00000	507
218-9422.00-00000	516
218-9425.00-00000	534
218-9426.00-00000	534
218-9501.00-00000	491
218-9502.00-00000	491
218-9601.00-00000	524
218-9602.00-00000	524
218-9603.00-00000	524
218-9604.00-00000	524
218-9605.00-00000	524
218-9606.00-00000	524
218-9613.00-00001	529
218-9801.00-00000	522
218-9802.00-00000	522
218-9803.00-00000	522
218-9807.00-00000	523
218-9808.00-00000	523
218-9809.00-00000	523
219-9001.00-00000	596
219-9002.00-00000	597
219-9003.00-00000	550
219-9004.00-00000	550
219-9005.00-00000	595
219-9006.00-00000	551
219-9007.00-00000	551
219-9101.00-00000	596
219-9102.00-00000	552
219-9103.00-00000	552
219-9104.00-00000	555
219-9105.00-00000	597
219-9106.00-00000	596
219-9107.00-00000	553
219-9108.00-00000	553
219-9109.00-00000	554
219-9111.00-00000	595
219-9112.00-00000	595
219-9113.00-00000	554
219-9114.00-00000	554
219-9201.00-00000	598
220-10LL.00-Hxxmm	149
220-20LL.00-Hxxmm	149
220-0501.00-00000	149
220-0501.04-00000	31
220-0502.00-00000	149
220-0502.04-00000	31
220-0503.00-00000	149
220-0503.04-00000	31
220-1301.00-00000	148
220-9001.00-00000	30
220-9002.00-00000	30

Number	Page
220-9003.00-00000	30
220-9004.00-00000	30
220-9005.00-00000	30
220-9006.00-00000	30
220-9007.00-00000	36
220-9013.00-00000	36
220-9018.00-00000	31
220-9020.00-00000	30
220-9021.00-00000	30
220-9022.00-00000	30
220-9101.00-00000	148
220-9102.00-00000	148
220-9103.00-00000	148
220-9104.00-00000	148
220-9105.00-00000	148
220-9106.00-00000	148
220-9107.00-00000	148
220-9117.00-00000	148
220-9118.00-00000	148
220-9119.00-00000	148
220-9120.00-00000	31
220-9121.00-00000	31
220-9122.00-00000	31
220-9127.00-00000	148
220-9201.00-00000	37
220-9201.00-07200	37
220-9202.00-00000	37
220-9202.00-07200	37
220-9203.00-00000	37
220-9203.00-07200	37
220-9204.00-00000	37
220-9204.00-07200	37
220-9205.00-00000	37
220-9205.00-07200	37
220-9206.00-00000	37
220-9206.00-07200	37
220-9207.00-00000	35
220-9207.00-07200	35
220-9208.00-00000	35
220-9208.00-07200	35
220-9209.00-00000	35
220-9209.00-07200	35
220-9210.00-07200	35
220-9211.00-07200	35
220-9212.00-07200	35
220-9213.00-07200	35
220-9214.00-07200	35
220-9215.00-07200	35
220-9216.00-07200	35
220-9217.00-07200	35
220-9218.00-07200	35
220-9220.00-07200	35
220-9221.00-07200	35
220-9222.00-07200	35
220-9223.00-07200	35
220-9224.00-07200	35
220-9225.00-07200	35
220-9301.00-00000	33
220-9302.00-00000	33
220-9303.00-00000	33
220-9304.00-00000	33
220-9305.00-00000	33
220-9306.00-00000	33
220-9307.00-00000	33
220-9308.00-00000	33
220-9309.00-00000	33
220-9310.00-00000	33
220-9311.00-00000	33
220-9312.00-00000	33
220-9313.00-00000	38
220-9317.00-00000	38
220-9318.00-00000	38
220-9501.00-00000	36
220-9503.00-00000	36
220-9601.00-00000	37
220-9602.00-00000	37
220-9603.00-00000	37
220-9604.00-00000	37
220-9605.00-00000	37
220-9606.00-00000	37
220-9701.00-00000	32
221-9001.00-00000	780
221-9101.00-00000	781
222-9001.00-00000	556
222-9101.00-00000	556
222-9102.00-00000	557
222-9103.00-00000	556
222-9104.00-00000	557

Number	Page
222-9105.00-00000	557
222-9301.00-00000	564
223-9001.00-00000	613
223-9002.00-00000	613
223-9003.00-00000	613
223-9004.00-00000	613
223-9005.00-00000	613
223-9006.00-00000	613
223-9007.00-00000	613
223-9008.00-00000	613
223-9009.00-00000	613
223-9010.00-00000	613
223-9011.00-00000	613
223-9012.00-00000	613
223-9101.00-00000	613
223-9102.00-00000	613
223-9103.00-00000	613
223-9104.00-00000	613
223-9105.00-00000	613
223-9106.00-00000	613
223-9107.00-00000	613
223-9108.00-00000	613
223-9109.00-00000	613
223-9110.00-00000	613
223-9111.00-00000	613
223-9112.00-00000	613
223-9201.00-00000	613
223-9202.00-00000	613
223-9203.00-00000	613
223-9204.00-00000	613
223-9205.00-00000	613
223-9206.00-00000	613
223-9207.00-00000	613
223-9208.00-00000	613
223-9209.00-00000	613
223-9210.00-00000	613
223-9211.00-00000	613
223-9212.00-00000	613
223-9301.00-00000	613
223-9302.00-00000	613
223-9303.00-00000	613
223-9304.00-00000	613
223-9305.00-00000	613
223-9307.00-00000	613
223-9308.00-00000	613
223-9309.00-00000	613
223-9310.00-00000	613
223-9401.00-00000	611
223-9402.00-00000	611
223-9403.00-00000	611
223-9404.00-00000	611
223-9501.00-00000	610
223-9601.00-00000	611
223-9602.00-00000	611
223-9603.00-00000	611
223-9604.00-00000	611
224-9001.00-00000	601
224-9003.00-00000	605
224-9005.00-00000	605
224-9008.00-00000	604
224-9009.00-00000	609
224-9010.00-00000	609
224-9011.00-00000	609
224-9012.00-00000	604
224-9101.00-00000	600
224-9102.00-00000	600
224-9104.00-00000	602
224-9105.00-00000	602
224-9201.00-00000	605
225-1003.00-00000	666
225-1004.00-00000	666
225-1005.00-00000	666
225-1503.00-00000	666
225-1504.00-00000	666
225-1505.00-00000	666
225-2003.00-00000	666
225-2004.00-00000	666
225-2005.00-00000	666
226-1003.00-00000	666
226-1004.00-00000	666
226-1005.00-00000	666
226-1503.00-00000	666
226-1504.00-00000	666
226-1505.00-00000	666
226-2003.00-00000	666
226-2004.00-00000	666
226-2005.00-00000	666
228-9001.00-00000	430

Number	Page
228-9201.00-00000	424
228-9202.00-00000	424
229-0501.00-00000	213
229-0504.35-04045	429
229-0504.35-04050	429
229-9001.00-00000	415
229-9101.00-00000	213
229-9109.00-00000	428
229-9110.00-00000	428
229-9111.00-00000	426
229-9112.00-00000	426
229-9113.00-00000	427
230-9001.00-00000	776
230-9002.00-00000	776
230-9101.00-00000	774
230-9102.00-00000	774
230-9305.00-00000	778
230-9306.00-00000	778
230-9308.00-00000	775
230-9309.00-00000	775
230-9501.00-00000	779
230-9502.00-00000	779
231-9001.00-00000	771
231-9004.00-00000	771
231-9005.00-00000	771
232-0201.00-00000	459
232-0202.00-00000	459
232-0207.00-00000	459
232-0208.00-00000	459
232-0301.00-00000	460
232-0302.00-00000	460
232-0303.00-00000	460
232-0304.00-00000	460
232-0401.00-00000	465
232-0402.00-00000	465
232-0409.00-00000	465
232-0410.00-00001	465
232-0410.03-00000	465
232-0501.00-00000	462
232-0502.00-00000	462
232-0601.00-00000	463
232-0701.00-00000	463
232-0801.00-00000	463
232-1201.00-00000	467
232-8710.00-01401	465
232-8710.00-01402	465
232-9001.00-00000	467
232-9101.00-00000	461
232-9102.00-00000	461
232-9103.00-00000	461
232-9104.00-00000	461
232-9105.00-00000	461
232-9106.00-00000	461
232-9107.00-00000	461
232-9109.00-00000	461
232-9111.00-00000	461
232-9141.00-00000	465
232-9201.00-00000	467
232-9303.00-00000	459
232-9304.00-00000	459
232-9401.00-00000	459
232-9402.00-00000	459
232-9403.00-00000	459
232-9404.00-00000	459
232-9405.00-00000	459
232-9406.00-00000	459
232-9407.00-00000	459
232-9408.00-00000	459
232-9409.00-00000	459
232-9410.00-00000	459
232-9411.00-00000	459
232-9412.00-00000	459
232-9413.00-00000	459
232-9414.00-00000	459
232-9415.00-00000	459
232-9416.00-00000	459
232-9417.00-00000	459
232-9418.00-00000	459
232-9419.00-00000	459
232-9420.00-00000	459
233-9101.00-00000	531
233-9102.00-00000	531
233-9103.00-00000	531
233-9104.00-00000	531
233-9201.00-00000	531
233-9202.00-00000	531
233-9203.00-00000	531
233-9204.00-00000	531

Index by Part Number

Number	Page
235-1001.00-00000	205, 206
235-1002.00-00000	205, 206
235-1005.00-00000	209
235-1006.00-00000	209
235-9001.00-00000	205
235-9002.00-00000	205
235-9003.00-00000	205
235-9004.00-00000	205
235-9005.00-00000	205
235-9006.00-00000	205
235-9007.00-00000	205
235-9008.00-00000	205
235-9009.00-00000	207
235-9010.00-00000	207
235-9011.00-00000	207
235-9012.00-00000	207
235-9013.00-00000	206
235-9014.00-00000	206
235-9015.00-00000	476
235-9016.00-00000	476
235-9017.00-00000	476
235-9018.00-00000	476
235-9101.00-00000	212
235-9102.00-00000	212
235-9103.00-00000	212
235-9104.00-00000	212
235-9105.00-00000	212
235-9106.00-00000	212
235-9107.00-00000	212
235-9108.00-00000	212
235-9109.00-00000	212
235-9201.00-00000	212
235-9202.00-00000	212
235-9203.00-00000	212
235-9204.00-00000	212
235-9209.00-00000	77
235-9401.00-00000	209
235-9402.00-00000	209
235-9501.00-00000	211
235-9502.00-00000	211
235-9503.00-00000	211
235-9504.00-00000	211
235-9505.00-00000	211
235-9506.00-00000	211
235-9507.00-00000	211
235-9508.00-00000	211
235-9510.00-00000	211
235-9511.00-00000	211
235-9512.00-00000	211
235-9513.00-00000	211
235-9601.00-00000	211
235-9602.00-00000	211
235-9603.00-00000	211
235-9604.00-00000	211
235-9605.00-00000	211
235-9606.00-00000	211
235-9607.00-00000	211
235-9608.00-00000	211
235-9610.00-00000	211
235-9611.00-00000	211
235-9612.00-00000	211
235-9613.00-00000	211
237-0401.06-07032	425
237-0401.06-07035	425
237-0401.06-09003	425
237-0402.06-07032	425
237-8002.00-00000	425
237-8004.00-00000	425
237-8031.00-00000	425
237-9001.00-00000	425
237-9002.00-00000	425
237-9031.00-00000	425
237-9051.00-00000	425
237-9101.00-00000	425
237-9102.00-00000	425
237-9103.00-00000	425
237-9154.00-00000	425
237-9303.00-00000	425
237-9304.00-00000	425
237-9307.00-00000	171
238-1501.00-00000	307
238-9001.00-00000	307
238-9002.00-00000	307
238-9003.00-00000	307
238-9004.00-00000	307
238-9101.00-00000	309
238-9102.00-00000	309
238-9103.00-00000	309

Number	Page
238-9104.00-00000	309
238-9105.00-00000	309
238-9106.00-00000	309
238-9107.00-00000	309
238-9108.00-00000	309
238-9109.00-00000	309
238-9110.00-00000	309
238-9301.00-00000	309
238-9302.00-00000	309
238-9303.00-00000	309
238-9304.00-00000	309
238-9305.00-00000	309
238-9306.00-00000	309
238-9307.00-00000	309
238-9308.00-00000	309
238-9309.00-00000	309
238-9310.00-00000	309
240-9002.00-00000	617
240-9201.00-00000	617
240-9202.00-00000	617
241-0903.00-00000	679
241-9001.00-00000	558
241-9001.81-00000	559
241-9002.00-00000	558
241-9201.00-00000	766
242-9001.00-00000	599
242-9101.00-00000	599
242-9102.00-00000	599
242-9103.00-00000	599
243-9002.00-00000	576
243-9003.00-00000	576
243-9007.00-00000	576
243-9009.00-00000	576
243-9010.00-00000	576
243-9011.00-00000	576
243-9101.00-00000	574
243-9102.00-00000	574
243-9102.00-00001	574
243-9103.00-00000	574
243-9104.00-00000	574
243-9104.00-00001	574
243-9105.00-00000	575
243-9106.00-00000	575
243-9106.00-00001	575
243-9107.00-00000	575
243-9108.00-00000	575
243-9108.00-00001	575
243-9109.00-00000	574
243-9110.00-00000	574
243-9110.00-00001	574
243-9111.00-00000	575
243-9112.00-00000	575
243-9112.00-00001	575
243-9113.00-00000	579
243-9114.00-00000	579
243-9115.00-00000	579
243-9116.00-00000	579
243-9117.00-00000	579
243-9118.00-00000	579
243-9119.00-00000	579
243-9120.00-00000	579
243-9201.00-00000	577
243-9202.00-00000	577
243-9202.00-00001	577
243-9203.00-00000	577
243-9204.00-00000	577
243-9204.00-00001	577
243-9206.00-00000	588
243-9207.00-00000	588
243-9208.00-00000	577
243-9209.00-00000	577
243-9209.00-00001	577
243-9210.00-00000	588
243-9211.00-00000	589
243-9212.00-00000	589
243-9213.00-00000	589
243-9214.00-00000	581
243-9215.00-00000	581
243-9216.00-00000	581
243-9217.00-00000	581
243-9218.00-00000	95
243-9219.00-00000	95
243-9220.00-00000	95
243-9221.00-00000	95
243-9222.00-00000	95
243-9223.00-00000	95
243-9224.00-00000	95
243-9225.00-00000	95

Number	Page
243-9226.00-00000	95
243-9227.00-00000	95
243-9228.00-00000	95
243-9229.00-00000	95
245-9001.00-00000	560
245-9002.00-00000	560
245-9003.00-00000	561
245-9004.00-00000	561
245-9101.00-00000	560
245-9102.00-00000	560
245-9103.00-00000	560
245-9104.00-00000	560
245-9105.00-00000	560
245-9106.00-00000	560
245-9107.00-00000	560
245-9108.00-00000	560
245-9109.00-00000	560
245-9110.00-00000	561
245-9111.00-00000	561
245-9112.00-00000	561
245-9113.00-00000	560
245-9301.00-00000	562
245-9303.00-00000	562
245-9304.00-00000	402
245-9304.07-07101	562
245-9305.00-00000	403
245-9306.00-00000	403
245-9312.00-00000	405, 563
245-9313.00-00000	405, 563
245-9317.00-00020	404
245-9317.00-00030	404
245-9317.00-00040	404
246-0103.03-00000	398
246-0103.06-07032	398
246-0103.50-00000	398
246-0104.03-00000	398
246-0104.06-07032	398
246-0202.00-00000	398
246-0204.00-00000	398
248-0602.15-00135	41
248-0602.15-00275	41
248-9001.35-00000	66
248-9002.35-00000	66
248-9004.35-00000	66
248-9006.35-00000	66
248-9007.35-00000	66
248-9010.35-00000	66
248-9011.35-00000	66
248-9015.35-00000	66
248-9016.35-00000	66
248-9018.35-00000	66
248-9019.35-00000	66
248-9020.35-00000	66
248-9022.35-00000	66
248-9023.35-00000	66
248-9024.35-00000	66
248-9025.35-00000	66
248-9026.35-00000	66
248-9030.35-00000	66
248-9033.35-00000	66
248-9034.35-00000	66
248-9035.35-00000	66
248-9036.35-00000	66
248-9038.35-00000	66
248-9039.35-00000	66
248-9042.00-03008	57
248-9042.00-06008	57
248-9042.00-07007	57
248-9042.00-09003	57
248-9043.00-03008	57
248-9043.00-06008	57
248-9043.00-07007	57
248-9043.00-09003	57
248-9100.00-00000	57
248-9101.00-00000	57
248-9102.00-00000	57
248-9103.00-00000	57
248-9104.00-00000	57
248-9105.00-00000	57
248-9106.00-00000	57
248-9107.00-00000	57
248-9108.00-00000	57
248-9109.00-00000	57
248-9110.00-00000	57
248-9150.00-00000	57
248-9151.00-00000	57
248-9152.00-00000	57
248-9153.00-00000	57

Number	Page
248-9154.00-00000	57
248-9155.00-00000	57
248-9156.00-00000	57
248-9157.00-00000	57
248-9158.00-00000	57
248-9159.00-00000	57
248-9160.00-00000	57
248-9303.00-00022	53
248-9303.00-00024	53
248-9303.00-00026	53
248-9303.00-00028	53
248-9303.00-00038	53
248-9308.00-00022	53
248-9308.00-00024	53
248-9308.00-00026	53
248-9308.00-00028	53
248-9308.00-00038	53
248-9309.00-00022	53
248-9309.00-00024	53
248-9309.00-00026	53
248-9309.00-00028	53
248-9309.00-00038	53
248-9353.00-00022	53
248-9353.00-00024	53
248-9353.00-00026	53
248-9353.00-00028	53
248-9353.00-00038	53
248-9358.00-00022	53
248-9358.00-00024	53
248-9358.00-00026	53
248-9358.00-00028	53
248-9358.00-00038	53
248-9359.00-00022	53
248-9359.00-00024	53
248-9359.00-00026	53
248-9359.00-00028	53
248-9359.00-00038	53
248-9601.00-00001	134
248-9601.00-00002	134
248-9601.00-00003	134
248-9601.00-00004	134
248-9601.00-00005	134
248-9603.00-00001	133
248-9603.00-00002	133
248-9603.00-00003	133
248-9603.00-00004	133
248-9603.00-00005	133
248-9604.00-00001	133
248-9604.00-00002	133
248-9604.00-00003	133
248-9604.00-00004	133
248-9604.00-00005	133
248-9651.00-00001	134
248-9651.00-00002	134
248-9651.00-00003	134
248-9651.00-00004	134
248-9651.00-00005	134
248-9652.00-00001	133
248-9652.00-00002	133
248-9652.00-00003	133
248-9652.00-00004	133
248-9652.00-00005	133
248-9653.00-00001	133
248-9653.00-00002	133
248-9653.00-00003	133
248-9653.00-00004	133
248-9653.00-00005	133
248-9752.00-00001	41
248-9752.00-00002	41
248-9752.00-00003	41
248-9752.00-00004	41
248-9752.00-00005	41
248-9752.00-00006	41
248-9752.00-00007	41
248-9752.00-00010	41
248-9752.00-00019	41
248-9802.01-01201	55
248-9802.01-02201	55
248-9802.11-11201	59
248-9802.11-12201	59
248-9802.13-11201	59
248-9802.13-12201	59
248-9803.01-01201	55
248-9803.01-02201	55
248-9803.11-11201	59
248-9803.11-12201	59
248-9804.01-01201	55
248-9804.01-02201	55

Index by Part Number

Number	Page
248-9804.11-11201	59
248-9804.11-12201	59
248-9807.01-01201	55
248-9807.01-02201	55
248-9807.11-11201	59
248-9807.11-12201	59
248-9808.01-01201	55
248-9808.01-02201	55
248-9808.11-11201	59
248-9808.11-12201	59
248-9808.13-11201	59
248-9808.13-12201	59
248-9862.03-01201	55
248-9862.03-02201	55
248-9868.03-01201	55
248-9868.03-02201	55
248-9901.00-00000	173, 300
248-9904.00-00000	173, 300
249-9005.00-00000	470
249-9105.00-00000	471
249-9205.00-00000	472
250-9103.00-00000	651
250-9104.00-00000	651
250-9106.00-00000	490
250-9107.00-00000	490
251-0102.00-00000	773
251-9101.00-00000	772
251-9102.00-00000	773
252-9001.00-00000	399
252-9004.00-00000	399
255-9402.00-00000	47
255-9403.00-00000	47
255-9405.00-00000	47
255-9409.00-00000	47
255-9410.00-00000	47
255-9427.00-00000	43
255-9429.00-00000	47
255-9430.00-00000	47
255-9801.00-00000	45
255-9802.00-00000	45
255-9803.00-00000	45
255-9804.00-00000	45
255-9805.00-00000	45
255-9806.00-00000	45
255-9807.00-00000	45
255-9808.00-00000	45
255-9809.00-00000	45
255-9810.00-00000	45
255-9811.00-00000	48
255-9812.00-00000	42
255-9813.00-00000	42
255-9814.00-00000	42
255-9851.00-00000	45
255-9852.00-00000	45
255-9853.00-00000	45
255-9854.00-00000	45
255-9855.00-00000	45
255-9856.00-00000	45
255-9857.00-00000	45
255-9858.00-00000	45
255-9859.00-00000	45
255-9860.00-00000	45
255-9861.00-00000	48
259-9001.00-00000	407
259-9101.00-00000	407
259-9102.00-00000	407
259-9103.00-00000	409
263-9001.00-00000	414
263-9002.00-00000	414
263-9003.00-00000	414
263-9004.00-00000	414
263-9007.00-00000	414
263-9008.00-00000	414
263-9009.00-00000	414
263-9010.00-00000	414
264-9001.00-00000	401
264-9002.00-00000	401
264-9003.00-00000	401
264-9004.00-00000	401
264-9005.00-00000	401
264-9006.00-00000	401
264-9007.00-00000	401
264-9008.00-00000	401
264-9009.00-00000	401
264-9101.00-00000	400
264-9102.00-00000	400
265-0101.01-00000	499
265-0101.02-00000	499

Number	Page
265-0102.01-00000	499
265-0102.02-00000	499
265-0201.01-00000	499
265-0201.02-00000	499
265-0202.01-00000	499
265-0202.02-00000	499
265-0501.01-00000	499
265-0501.02-00000	499
265-0502.01-00000	499
265-0502.02-00000	499
265-1001.00-00000	756
265-1002.00-00000	756
265-1101.00-00000	756
265-1102.00-00000	756
265-1103.00-00000	756
265-8701.00-00000	499
265-8702.00-00000	499
265-8703.00-00000	499
265-8704.00-00000	499
265-8705.00-00000	499
265-8707.00-00000	499
265-8708.00-00000	499
265-8709.00-00000	499
265-8717.00-00000	499
265-8718.00-00000	499
265-8719.00-00000	499
265-8720.00-00000	499
265-9001.00-00000	497
265-9002.00-00000	497
265-9003.00-00000	497
265-9004.00-00000	497
265-9103.00-00000	497
265-9201.00-00000	497
265-9202.00-00000	497
265-9401.00-00000	497
265-9402.00-00000	497
265-9403.00-00000	497
265-9404.00-00000	497
265-9601.00-00000	420
265-9602.00-00000	420
265-9603.00-00000	420
265-9604.00-00000	420
265-9605.00-00000	420
265-9606.00-00000	420
265-9607.00-00001	421
265-9607.00-01333	421
265-9607.00-99999	421
265-9610.00-00000	473
265-9610.00-01333	473
265-9610.00-09999	473
267-9003.00-00000	532
267-9004.00-00000	532
267-9005.00-00000	533
267-9007.00-00000	533
267-9106.00-00000	530
267-9107.00-00000	530
267-9303.00-00000	533
267-9304.00-00000	533
267-9701.00-00000	532
267-9702.00-00000	532
268-0020.00-00000	669
268-0030.00-00000	669
268-0040.00-00000	669
268-0050.00-00000	669
268-0060.00-00000	669
268-0070.00-00000	669
268-0080.00-00000	669
268-0100.00-00000	669
268-0120.00-00000	669
268-0150.00-00000	669
268-0160.00-00000	669
268-0180.00-00000	669
268-0200.00-00000	669
268-0220.00-00000	669
268-0250.00-00000	669
268-0300.00-00000	669
268-0350.00-00000	669
268-0505.00-00000	667
268-0606.00-00000	667
268-0802.00-00000	667
268-0804.00-00000	667
268-1002.00-00000	667
268-1003.00-00000	667
268-1004.00-00000	667
268-1005.00-00000	667
268-1204.00-00000	667
268-1502.00-00000	667
268-1503.00-00000	667

Number	Page
268-1504.00-00000	667
268-1505.00-00000	667
268-1803.00-00000	667
268-2003.00-00000	667
268-2004.00-00000	667
268-2005.00-00000	667
268-2505.00-00000	667
268-3003.00-00000	667
268-3004.00-00000	667
268-3005.00-00000	667
268-4005.00-00000	667
268-5005.00-00000	667
270-0020.00-00000	668
270-0025.00-00000	668
270-0030.00-00000	668
270-0035.00-00000	668
270-0040.00-00000	668
270-0045.00-00000	668
270-0050.00-00000	668
270-0060.00-00000	668
270-0070.00-00000	668
270-0080.00-00000	668
270-0090.00-00000	668
270-0100.00-00000	668
270-0110.00-00000	668
270-0120.00-00000	668
270-0130.00-00000	668
270-0140.00-00000	668
270-0150.00-00000	668
270-0160.00-00000	668
270-0180.00-00000	668
270-0200.00-00000	668
270-0220.00-00000	668
270-0250.00-00000	668
270-0300.00-00000	668
270-0350.00-00000	668
270-0400.00-00000	668
270-0450.00-00000	668
270-0500.00-00000	668
272-0020.00-00000	669
272-0025.00-00000	669
272-0030.00-00000	669
272-0035.00-00000	669
272-0040.00-00000	669
272-0045.00-00000	669
272-0050.00-00000	669
272-0060.00-00000	669
272-0070.00-00000	669
272-0080.00-00000	669
272-0090.00-00000	669
272-0100.00-00000	669
272-0110.00-00000	669
272-0120.00-00000	669
272-0130.00-00000	669
272-0140.00-00000	669
272-0150.00-00000	669
272-0160.00-00000	669
272-0180.00-00000	669
272-0200.00-00000	669
272-0220.00-00000	669
272-0250.00-00000	669
272-0300.00-00000	669
272-0350.00-00000	669
272-0400.00-00000	669
272-0450.00-00000	669
272-0500.00-00000	669
280-9001.00-00000	475
280-9002.00-00000	475
280-9003.00-00000	475
280-9004.00-00000	475
280-9101.00-00000	410
281-9006.00-00000	468
281-9006.00-00001	469
281-9007.00-00000	468
281-9007.00-00001	469
281-9101.00-00000	127
282-9001.00-00000	423
282-9008.00-00000	454
282-9009.00-00000	454
282-9010.00-00000	454
282-9011.00-00000	454
282-9407.00-00000	452
282-9408.00-00000	452
282-9409.00-00000	452
282-9410.00-00000	452
282-9411.00-00000	452
282-9412.00-00000	452
282-9413.00-00003	451

Number	Page
282-9413.00-00009	451
282-9413.00-00015	451
282-9413.00-00020	451
282-9413.00-00025	451
282-9413.00-00031	451
282-9413.00-00037	451
282-9414.00-00003	451
282-9414.00-00009	451
282-9414.00-00015	451
282-9414.00-00020	451
282-9414.00-00025	451
282-9414.00-00031	451
282-9414.00-00037	451
282-9415.00-00003	451
282-9415.00-00009	451
282-9415.00-00015	451
282-9415.00-00020	451
282-9415.00-00025	451
282-9415.00-00031	451
282-9415.00-00037	451
282-9416.00-00000	449
282-9417.00-00000	449
282-9418.00-00000	449
282-9419.00-00000	449
282-9420.00-00000	449
282-9421.00-00000	449
282-9428.00-00001	449
282-9428.00-00002	449
282-9428.00-00003	449
282-9428.00-00004	449
282-9428.00-00005	449
282-9428.00-00006	449
282-9428.00-00007	449
282-9428.00-00008	449
282-9429.00-00001	449
282-9429.00-00002	449
282-9429.00-00003	449
282-9429.00-00004	449
282-9429.00-00005	449
282-9429.00-00006	449
282-9429.00-00007	449
282-9429.00-00008	449
282-9501.00-00000	419
282-9502.00-00000	419
282-9503.00-00000	419
282-9601.00-00000	417
290-9401.00-00000	140
291-9001.00-00000	50
291-9002.00-00000	50
291-9003.00-00000	50
291-9004.00-00000	50
291-9005.00-00000	50
291-9007.00-00000	50
291-9008.00-00000	50
291-9009.00-00000	50
291-9010.00-00000	50
291-9011.00-00000	50
291-9102.00-00000	51
292-0301.15-00000	764
292-0302.70-00000	764
292-0306.80-02530	764
292-0311.15-00000	764
292-0312.83-00000	764
292-0401.00-03007	762
292-0401.00-03010	762
292-0402.00-03014	762
292-0403.06-07035	762
292-0403.06-09005	762
292-0605.00-00000	170
292-0606.00-00000	170
292-0701.15-01530	763
292-0702.15-01030	763
294-8004.00-00001	736
294-9001.00-00015	737
294-9001.00-00020	737
294-9001.00-00030	737
294-9001.00-00040	737
294-9002.00-00015	737
294-9002.00-00020	737
294-9002.00-00030	737
294-9002.00-00040	737
294-9003.00-00034	739
294-9003.00-00043	739
294-9003.00-00052	739
294-9003.00-00063	739
294-9102.52-10010	740
294-9102.52-15015	740
294-9102.52-20020	740

Index by Part Number

Number	Page
294-9102.52-25025	740
294-9102.52-30030	740
294-9103.00-00021	735
294-9103.00-00031	735
294-9103.00-00036	735
294-9103.00-00041	735
294-9103.00-00046	735
294-9103.00-00056	735
294-9103.00-00061	735
294-9103.00-00066	735
294-9104.00-02224	727
294-9104.00-02527	727
294-9104.00-02830	727
294-9104.00-03133	727
294-9106.00-00040	738
294-9106.00-00045	738
294-9106.00-00050	738
294-9106.00-00055	738
294-9106.00-00060	738
294-9106.00-00080	738
294-9107.33-10010	740
294-9107.33-15015	740
294-9107.33-20020	740
294-9107.33-25025	740
294-9107.33-30030	740
294-9112.00-00017	734
294-9112.00-00026	734
294-9112.00-00030	734
294-9112.00-00034	734
294-9112.00-00042	734
294-9113.00-00017	733
294-9113.00-00026	733
294-9113.00-00030	733
294-9113.00-00034	733
294-9113.00-00042	733
294-9114.00-00031	732
294-9114.00-00039	732
294-9116.00-00017	731
294-9116.00-00026	731
294-9116.00-00030	731
294-9116.00-00038	731
294-9117.00-00022	731
294-9117.00-00031	731
294-9117.00-00035	731
294-9117.00-00043	731
294-9118.00-00037	734
294-9118.00-00046	734
294-9118.00-00050	734
294-9118.00-00054	734
294-9118.00-00062	734
294-9119.00-00037	733
294-9119.00-00046	733
294-9119.00-00050	733
294-9119.00-00054	733
294-9119.00-00062	733
294-9120.00-00042	732
294-9120.00-00051	732
294-9120.00-00055	732
294-9120.00-00059	732
294-9120.00-00067	732
294-9210.00-00017	730
294-9210.00-00026	730
294-9210.00-00034	730
294-9210.00-00042	730
294-9211.00-00017	730
294-9211.00-00026	730
294-9211.00-00034	730
294-9211.00-00042	730
294-9220.00-00138	730
294-9302.00-00055	728
294-9303.00-00055	729
295-9001.33-10001	745
295-9001.33-10003	745
295-9001.33-10005	745
295-9001.33-15001	745
295-9001.33-15003	745
295-9001.33-15005	745
295-9001.33-20001	745
295-9001.33-20003	745
295-9001.33-20005	745
295-9001.33-25001	745
295-9001.33-25003	745
295-9001.33-25005	745
295-9001.33-30001	745
295-9001.33-30003	745
295-9001.33-30005	745
295-9001.52-10001	745
295-9001.52-10003	745

Number	Page
295-9001.52-10005	745
295-9001.52-15001	745
295-9001.52-15003	745
295-9001.52-15005	745
295-9001.52-20001	745
295-9001.52-20003	745
295-9001.52-20005	745
295-9001.52-25001	745
295-9001.52-25003	745
295-9001.52-25005	745
295-9001.52-30001	745
295-9001.52-30003	745
295-9001.52-30005	745
295-9002.00-00001	743
295-9002.00-00003	743
295-9002.00-00005	743
295-9003.00-00005	742
302-9001.00-20000	275, 351
302-9001.00-30000	275, 351
302-9001.00-50000	275, 351
302-9001.00-60000	275, 351
307-9001.00-00000	349
307-9003.00-00000	347
307-9004.00-00000	347
307-9101.00-00000	246
307-9102.00-00000	246
307-9103.00-00000	246
307-9104.00-00000	246
307-9105.00-00000	247
307-9106.00-00000	247
307-9301.00-00000	345
307-9302.00-00000	243
307-9305.00-00000	243
307-9306.00-00000	345
307-9501.00-00000	248
307-9502.00-00000	248
307-9503.00-00000	248
307-9504.00-00000	248
307-9505.00-01333	248
307-9506.00-09999	248
308-9006.00-00000	249
308-9007.00-00000	249
308-9008.00-00000	249
348-9102.00-00000	61
348-9103.00-00000	61
348-9107.00-00000	61
348-9108.00-00000	61
348-9152.00-00000	61
348-9153.00-00000	61
348-9157.00-00000	61
348-9158.00-00000	61
348-9202.00-00000	101
348-9203.00-00000	101
348-9207.00-00000	101
348-9208.00-00000	101
348-9252.00-00000	101
348-9253.00-00000	101
348-9257.00-00000	101
348-9258.00-00000	101
348-9300.00-00000	61
348-9301.00-00000	61
348-9302.00-00000	61
348-9303.00-00000	61
348-9304.00-00000	61
348-9305.00-00000	61
348-9306.00-00000	61
348-9307.00-00000	61
348-9308.00-00000	61
348-9309.00-00000	61
348-9310.00-00000	61
348-9350.00-00000	61
348-9351.00-00000	61
348-9352.00-00000	61
348-9353.00-00000	61
348-9354.00-00000	61
348-9355.00-00000	61
348-9356.00-00000	61
348-9357.00-00000	61
348-9358.00-00000	61
348-9359.00-00000	61
348-9360.00-00000	61
348-9402.00-00000	101
348-9403.00-00000	101
348-9407.00-00000	101
348-9408.00-00000	101
348-9452.00-00000	101
348-9453.00-00000	101
348-9457.00-00000	101

Number	Page
348-9458.00-00000	101
350-2004.00-00000	750
350-2005.00-00000	750
350-2040.00-00000	694
350-2046.00-00000	750
350-2080.00-00000	408
350-2080.00-00001	408
350-2080.00-00002	408
350-2096.00-00000	750
352-2151.03-00000	695
352-2151.03-00001	695
352-2161.03-000CF	715
352-2161.03-000CJ	715
352-2165.00-00004	332
353-2010.00-00000	748
353-2052.00-00001	453
359-0206.06-00000	748
359-0250.06-00000	748
406-9001.00-00015	135
406-9001.00-00020	135
406-9001.00-00022	135
406-9002.00-00015	135
406-9002.00-00020	135
406-9002.00-00022	135
406-9005.00-00013	74
406-9005.00-00016	74
406-9005.00-00018	74
406-9005.00-00021	74
406-9005.00-00026	74
406-9005.00-00031	74
406-9006.00-00013	74
406-9006.00-00016	74
406-9006.00-00018	74
406-9006.00-00021	74
406-9006.00-00026	74
406-9006.00-00031	74
406-9007.00-00013	90
406-9007.00-00018	90
406-9007.00-00026	90
406-9008.00-00013	90
406-9008.00-00018	90
406-9008.00-00026	90
406-9009.00-00013	90
406-9009.00-00018	90
406-9009.00-00026	90
406-9010.00-00013	90
406-9010.00-00018	90
406-9010.00-00026	90
407-9001.00-00000	328
407-9002.00-00000	328
407-9003.00-00000	224
407-9004.00-00000	224
407-9005.00-00000	328
407-9006.00-00000	328
407-9007.00-00000	224
407-9008.00-00000	224
407-9009.00-00000	328
407-9010.00-00000	328
407-9011.00-00000	224
407-9012.00-00000	224
407-9015.00-00000	328
407-9016.00-00000	328
407-9017.00-00000	224
407-9018.00-00000	224
407-9021.00-00000	329
407-9022.00-00000	329
407-9023.00-00000	225
407-9024.00-00000	225
407-9025.00-00000	329
407-9026.00-00000	329
407-9027.00-00000	225
407-9028.00-00000	225
407-9029.00-00000	225
407-9030.00-00000	225
407-9031.00-00000	225
407-9032.00-00000	225
407-9033.00-00000	329
407-9034.00-00000	329
407-9035.00-00000	329
407-9036.00-00000	329
407-9043.00-00000	226
407-9044.00-00000	226
407-9045.00-00000	226
407-9046.00-00000	226
407-9047.00-00000	226
407-9053.00-00000	226
407-9054.00-00000	226
407-9055.00-00000	226

Number	Page
407-9056.00-00000	226
407-9057.00-00000	226
407-9101.00-00000	329
407-9102.00-00000	225
407-9103.00-00000	329
407-9104.00-00000	225
407-9105.00-00000	329
407-9106.00-00000	225
407-9107.00-00000	329
407-9108.00-00000	225
407-9109.00-00000	225
407-9110.00-00000	225
407-9111.00-00000	225
407-9112.00-00000	225
407-9113.00-00000	329
407-9114.00-00000	329
407-9115.00-00000	329
407-9116.00-00000	329
407-9117.00-00000	329
407-9118.00-00000	225
407-9119.00-00000	329
407-9120.00-00000	225
407-9121.00-00000	225
407-9122.00-00000	225
407-9123.00-00000	329
407-9124.00-00000	329
407-9301.00-00015	227
407-9301.00-00020	227
407-9302.00-00015	227
407-9302.00-00020	227
407-9303.00-00015	227
407-9303.00-00020	227
407-9401.00-37015	418
407-9401.00-37020	418
407-9402.00-37015	418
407-9402.00-37020	418
407-9501.00-00015	343
407-9501.00-00018	343
407-9501.00-00020	343
407-9502.00-00015	343
407-9502.00-00018	343
407-9502.00-00020	343
407-9503.00-00015	343
407-9503.00-00018	343
407-9503.00-00020	343
407-9504.00-00015	343
407-9504.00-00018	343
407-9504.00-00020	343
407-9505.00-00015	239
407-9505.00-00018	239
407-9505.00-00020	239
407-9506.00-00015	239
407-9506.00-00018	239
407-9506.00-00020	239
407-9507.00-00015	239
407-9507.00-00018	239
407-9507.00-00020	239
407-9508.00-00015	239
407-9508.00-00018	239
407-9508.00-00020	239
407-9509.00-00015	239
407-9509.00-00018	239
407-9509.00-00020	239
407-9510.00-00015	239
407-9510.00-00018	239
407-9510.00-00020	239
407-9601.00-00015	229
407-9601.00-00020	229
407-9601.00-00025	229
407-9602.00-00015	222
407-9602.00-00020	222
407-9602.00-00025	222
407-9603.00-00015	223
407-9603.00-00020	223
407-9603.00-00025	223
407-9604.00-00000	228
407-9606.00-00015	230
407-9606.00-00020	230
408-9104.00-00015	386
408-9104.00-00020	386
408-9104.00-00025	386
408-9104.00-00030	386
408-9105.00-00015	386
408-9105.00-00020	386
408-9105.00-00025	386
408-9105.00-00030	386
408-9106.33-00010	166
408-9106.33-00015	166

Index by Part Number

Number	Page
408-9106.33-00020	166
408-9106.33-00025	166
408-9106.33-00030	166
408-9107.33-00010	166
408-9107.33-00015	166
408-9107.33-00020	166
408-9107.33-00025	166
408-9107.33-00030	166
408-9301.00-00015	137
408-9301.00-00020	137
408-9301.00-00025	137
408-9301.00-00030	137
408-9301.00-00035	137
408-9302.00-00015	137
408-9302.00-00020	137
408-9302.00-00025	137
408-9302.00-00030	137
408-9302.00-00035	137
408-9305.00-00010	136
408-9305.00-00015	136
408-9305.00-00020	136
412-8001.00-01525	640
412-9001.00-00015	640
412-9001.00-00020	640
412-9001.00-00025	640
412-9001.00-00030	640
412-9001.00-00035	640
412-9002.00-00015	641
412-9002.00-00020	641
412-9002.00-00025	641
412-9002.00-00030	641
412-9002.00-00035	641
412-9003.00-00015	635
412-9003.00-00020	635
412-9003.00-00025	635
412-9003.00-00030	635
412-9004.00-00015	642
412-9004.00-00020	642
412-9004.00-00025	642
412-9004.00-00030	642
412-9004.00-00035	642
412-9006.00-00015	646
412-9006.00-00025	646
412-9006.00-00030	646
412-9006.00-00035	646
412-9008.00-01515	648
412-9008.00-02020	648
412-9008.00-02523	648
412-9008.00-03030	648
412-9009.00-01515	648
412-9009.00-02020	648
412-9009.00-02523	648
412-9009.00-03030	648
412-9016.00-00015	649
412-9016.00-00020	649
412-9016.00-00025	649
412-9016.00-00030	649
412-9017.00-00015	649
412-9017.00-00020	649
412-9017.00-00025	649
412-9017.00-00030	649
412-9020.00-00015	644
412-9020.00-00020	644
412-9020.00-00025	644
412-9020.00-00030	644
412-9020.00-00035	644
412-9059.00-01217	625
412-9059.00-01722	625
412-9060.00-01217	625
412-9060.00-01722	625
412-9061.00-01217	625
412-9061.00-01722	625
412-9062.00-00015	645
412-9062.00-00020	645
412-9062.00-00025	645
412-9062.00-00030	645
412-9062.00-00035	645
412-9063.00-01217	626
412-9063.00-01722	626
412-9064.00-01217	626
412-9064.00-01722	626
412-9101.00-00015	628
412-9101.00-00020	628
412-9101.00-00025	628
412-9101.00-00030	628
413-0901.54-00000	696
413-9001.00-00015	709

Number	Page
413-9001.00-00020	709
413-9001.00-00022	709
413-9003.00-00015	696
413-9003.00-00020	696
413-9003.00-00027	696
413-9004.00-00015	696
413-9004.00-00020	696
413-9004.00-00027	696
413-9005.00-00015	712
413-9005.00-00020	712
413-9008.00-00015	709
413-9008.00-00020	709
413-9008.00-00022	709
413-9009.40-00609	710
413-9009.40-00811	710
413-9009.40-01215	710
413-9009.40-01821	710
413-9009.40-02225	710
413-9009.40-02427	710
413-9010.40-00609	710
413-9010.40-00811	710
413-9010.40-01215	710
413-9010.40-01821	710
413-9010.40-02225	710
413-9010.40-02427	710
413-9013.40-00609	708
413-9013.40-00811	708
413-9013.40-01215	708
413-9013.40-01821	708
413-9013.40-02225	708
413-9014.40-00609	708
413-9014.40-00811	708
413-9014.40-01215	708
413-9014.40-01821	708
413-9014.40-02225	708
413-9015.40-00609	708
413-9015.40-00811	708
413-9015.40-01215	708
413-9015.40-01821	708
413-9015.40-02225	708
413-9016.00-00811	711
413-9016.00-01215	711
413-9016.00-01821	711
413-9016.00-02225	711
413-9017.00-00815	707
413-9017.00-01320	707
413-9017.00-01522	707
413-9018.00-00815	707
413-9018.00-01320	707
413-9018.00-01522	707
413-9101.00-00015	717
413-9101.00-00020	717
413-9101.00-00025	717
413-9101.00-00030	717
413-9102.00-00015	717
413-9102.00-00020	717
413-9102.00-00025	717
413-9102.00-00030	717
413-9201.00-00609	719
413-9201.00-00811	719
413-9201.00-01215	719
413-9201.00-01821	719
413-9201.00-02225	719
413-9202.00-00810	719
413-9202.00-01113	719
413-9202.00-01215	719
413-9202.00-02022	719
413-9203.00-00810	719
413-9203.00-01113	719
413-9203.00-01215	719
413-9203.00-02022	719
413-9301.00-00012	131
413-9301.00-00016	131
413-9301.00-00020	131
413-9302.00-00012	131
413-9302.00-00016	131
413-9302.00-00020	131
413-9303.00-00012	131
413-9303.00-00016	131
413-9303.00-00020	131
413-9305.00-00012	131
413-9305.00-00016	131
413-9305.00-00020	131
413-9306.00-00012	131
413-9306.00-00016	131
413-9306.00-00020	131
413-9307.00-00012	131
413-9307.00-00016	131

Number	Page
413-9307.00-00020	131
417-9001.00-00015	538
417-9001.00-00020	538
417-9001.00-00025	538
417-9001.00-00030	538
417-9002.00-00015	549
417-9002.00-00020	549
417-9002.00-00025	549
417-9002.00-00030	549
417-9003.00-00015	549
417-9003.00-00020	549
417-9003.00-00025	549
417-9003.00-00030	549
417-9004.00-00010	603
417-9004.00-00015	603
417-9004.00-00020	603
417-9004.00-00030	603
417-9005.00-00010	544
417-9005.00-00015	544
417-9005.00-00020	544
417-9005.00-00030	544
417-9006.00-00010	544
417-9006.00-00015	544
417-9006.00-00020	544
417-9006.00-00030	544
417-9007.00-00010	546
417-9007.00-00015	546
417-9007.00-00020	546
417-9007.00-00030	546
417-9008.00-00010	546
417-9008.00-00015	546
417-9008.00-00020	546
417-9008.00-00030	546
417-9009.00-00010	603
417-9009.00-00015	603
417-9009.00-00020	603
417-9009.00-00030	603
417-9010.00-00010	544
417-9010.00-00015	544
417-9010.00-00020	544
417-9010.00-00030	544
417-9011.00-00010	544
417-9011.00-00015	544
417-9011.00-00020	544
417-9011.00-00030	544
417-9015.00-00012	606
417-9015.00-00016	606
417-9015.00-00019	606
417-9015.00-00026	606
417-9015.82-00012	607
417-9015.82-00016	607
417-9015.82-00021	607
417-9015.82-00026	607
417-9017.00-00012	606
417-9017.00-00016	606
417-9017.00-00019	606
417-9017.00-00026	606
417-9017.82-00012	607
417-9017.82-00016	607
417-9017.82-00021	607
417-9017.82-00026	607
417-9101.00-00015	538
417-9101.00-00020	538
417-9101.00-00025	538
417-9101.00-00030	538
417-9103.00-00015	541
417-9103.00-00020	541
417-9103.00-00025	541
417-9103.00-00030	541
417-9106.00-00015	539
417-9106.00-00020	539
417-9106.00-00025	539
417-9106.00-00030	539
417-9108.00-00015	541
417-9108.00-00020	541
417-9108.00-00025	541
417-9108.00-00030	541
417-9109.00-00015	539
417-9109.00-00020	539
417-9109.00-00025	539
417-9109.00-00030	539
417-9201.00-00609	618
417-9201.00-00811	618
417-9201.00-01215	618
417-9201.00-01821	618
417-9201.00-02225	618
418-9001.00-00015	504
418-9001.00-00020	504

Number	Page
418-9001.00-00025	504
418-9001.00-00030	504
418-9002.00-00015	504
418-9002.00-00020	504
418-9002.00-00025	504
418-9002.00-00030	504
418-9003.00-00015	504
418-9003.00-00020	504
418-9003.00-00025	504
418-9003.00-00030	504
418-9006.00-00010	501
418-9006.00-00015	501
418-9006.00-00020	501
418-9006.00-00025	501
418-9006.00-00030	501
418-9008.00-00010	501
418-9008.00-00015	501
418-9008.00-00020	501
418-9008.00-00025	501
418-9008.00-00030	501
418-9009.00-00010	501
418-9009.00-00015	501
418-9009.00-00020	501
418-9009.00-00025	501
418-9009.00-00030	501
418-9011.00-00010	501
418-9011.00-00015	501
418-9011.00-00020	501
418-9011.00-00025	501
418-9011.00-00030	501
418-9012.00-00010	501
418-9012.00-00015	501
418-9012.00-00020	501
418-9012.00-00025	501
418-9012.00-00030	501
418-9013.00-00010	501
418-9013.00-00015	501
418-9013.00-00020	501
418-9013.00-00025	501
418-9013.00-00030	501
418-9101.00-00015	508
418-9101.00-00020	508
418-9101.00-00025	508
418-9101.00-00030	508
418-9102.00-00015	513
418-9102.00-00020	513
418-9102.00-00025	513
418-9102.00-00030	513
418-9103.00-00015	513
418-9103.00-00020	513
418-9103.00-00025	513
418-9103.00-00030	513
418-9104.00-00015	508
418-9104.00-00020	508
418-9104.00-00025	508
418-9104.00-00030	508
418-9106.00-00015	508
418-9106.00-00020	508
418-9106.00-00025	508
418-9106.00-00030	508
418-9202.00-00015	517
418-9202.00-00020	517
418-9202.00-00025	517
418-9202.00-00030	517
418-9202.00-00035	517
418-9203.00-00015	517
418-9203.00-00020	517
418-9203.00-00025	517
418-9203.00-00030	517
418-9204.00-00015	521
418-9204.00-00020	521
418-9204.00-00025	521
418-9204.00-00030	521
418-9204.00-00035	521
418-9205.00-00015	521
418-9205.00-00020	521
418-9205.00-00025	521
418-9205.00-00030	521
418-9205.00-00035	521
418-9206.00-00020	525
418-9206.00-00025	525
418-9206.00-00030	525
418-9206.00-00035	525
418-9207.00-00020	525
418-9207.00-00025	525
418-9207.00-00030	525
418-9208.00-00015	517
418-9208.00-00020	517

Index by Part Number

Number	Page
418-9208.00-00025	517
418-9208.00-00030	517
418-9208.00-00035	517
418-9301.33-00008	492
418-9301.33-00010	492
418-9301.33-00014	492
418-9301.33-00020	492
418-9301.33-00024	492
418-9301.40-00008	492
418-9301.40-00010	492
418-9301.40-00014	492
418-9301.40-00020	492
418-9301.40-00024	492
418-9302.33-00008	493
418-9302.33-00010	493
418-9302.33-00014	493
418-9302.33-00020	493
418-9302.33-00024	493
418-9302.40-00008	493
418-9302.40-00010	493
418-9302.40-00014	493
418-9302.40-00020	493
418-9302.40-00024	493
418-9303.33-00008	494
418-9303.33-00010	494
418-9303.33-00014	494
418-9303.33-00020	494
418-9303.33-00024	494
418-9303.40-00008	494
418-9303.40-00010	494
418-9303.40-00014	494
418-9303.40-00020	494
418-9303.40-00024	494
418-9304.33-00008	495
418-9304.33-00010	495
418-9304.33-00014	495
418-9304.33-00020	495
418-9304.33-00024	495
418-9304.40-00008	495
418-9304.40-00010	495
418-9304.40-00014	495
418-9304.40-00020	495
418-9304.40-00024	495
418-9305.33-00008	496
418-9305.33-00010	496
418-9305.33-00014	496
418-9305.33-00020	496
418-9305.33-00024	496
418-9305.40-00008	496
418-9305.40-00010	496
418-9305.40-00014	496
418-9305.40-00020	496
418-9305.40-00024	496
443-9001.00-10015	583
443-9001.00-10020	583
443-9001.00-10025	583
443-9001.00-10030	583
443-9001.00-10033	583
443-9001.00-20015	583
443-9001.00-20020	583
443-9001.00-20025	583
443-9001.00-20030	583
443-9001.00-20033	583
443-9002.00-10015	585
443-9002.00-10020	585
443-9002.00-10025	585
443-9002.00-10030	585
443-9002.00-20015	585
443-9002.00-20020	585
443-9002.00-20025	585
443-9002.00-20030	585
443-9101.00-10015	587
443-9101.00-10020	587
443-9101.00-10025	587
443-9101.00-10030	587
443-9101.00-10033	587
443-9101.00-20015	587
443-9101.00-20020	587
443-9101.00-20025	587
443-9101.00-20030	587
443-9101.00-20033	587
448-0802.15-Lxxmm	445
448-9001.00-00810	412
448-9001.00-01113	412
448-9001.00-01416	412
448-9002.00-00810	412
448-9002.00-01113	412
448-9002.00-01416	412
448-9007.00-00810	413
448-9007.00-01113	413
448-9007.00-01416	413
448-9014.00-00810	413
448-9014.00-01113	413
448-9014.00-01416	413
448-9101.00-01012	63
448-9101.00-01016	63
448-9101.00-01020	63
448-9101.00-01026	63
448-9101.00-01031	63
448-9101.00-02012	63
448-9101.00-02016	63
448-9101.00-02020	63
448-9101.00-02026	63
448-9101.00-02031	63
448-9101.00-03012	63
448-9101.00-03016	63
448-9101.00-03020	63
448-9101.00-03026	63
448-9101.00-03031	63
448-9102.00-01012	63
448-9102.00-01016	63
448-9102.00-01020	63
448-9102.00-01026	63
448-9102.00-01031	63
448-9102.00-02012	63
448-9102.00-02016	63
448-9102.00-02020	63
448-9102.00-02026	63
448-9102.00-02031	63
448-9102.00-03012	63
448-9102.00-03016	63
448-9102.00-03020	63
448-9102.00-03026	63
448-9102.00-03031	63
448-9106.00-00018	446
448-9106.00-00020	446
448-9106.00-00023	446
448-9106.00-00025	446
448-9112.00-00020	433
448-9114.00-00020	439
448-9117.00-01018	445
448-9117.00-01020	445
448-9117.00-01023	445
448-9117.00-01025	445
448-9117.00-02018	445
448-9117.00-02020	445
448-9117.00-02023	445
448-9117.00-02025	445
448-9117.00-03018	445
448-9117.00-03020	445
448-9117.00-03023	445
448-9117.00-03025	445
448-9117.00-04018	445
448-9117.00-04020	445
448-9117.00-04023	445
448-9117.00-04025	445
448-9117.00-05018	445
448-9117.00-05020	445
448-9117.00-05023	445
448-9117.00-05025	445
448-9117.00-06018	445
448-9117.00-06020	445
448-9117.00-06023	445
448-9117.00-06025	445
448-9117.00-07018	445
448-9117.00-07020	445
448-9117.00-07023	445
448-9117.00-07025	445
448-9119.00-00000	435
448-9120.00-00000	441
448-9123.00-00000	443
448-9125.00-00000	437
448-9303.00-Lxxmm	447
448-9304.00-Lxxmm	447
455-9001.00-00013	46
455-9001.00-00018	46
455-9001.00-00026	46
455-9002.00-00013	46
455-9002.00-00018	46
455-9002.00-00026	46
455-9003.00-00013	49
455-9003.00-00018	49
455-9003.00-00026	49
455-9004.00-00013	46
455-9004.00-00018	46
455-9004.00-00026	46
480-9002.00-00810	411
480-9002.00-01113	411
480-9002.00-01416	411
482-9001.00-00015	422
482-9001.00-00020	422
482-9001.00-00025	422
482-9002.00-00015	422
482-9002.00-00020	422
482-9002.00-00025	422
482-9003.00-00015	422
482-9003.00-00020	422
482-9003.00-00025	422
500-9201.00-00000	88
500-9202.00-00000	88
500-9205.00-00000	88
500-9206.00-00000	88
500-9302.00-00000	104
500-9308.00-00000	109
500-9313.00-00000	110
500-9314.00-00000	110
500-9315.00-00000	110
500-9320.00-00000	109
500-9325.00-00000	111
500-9326.00-00000	111
500-9327.00-00000	111
500-9332.00-00000	109
500-9337.00-00000	111
500-9338.00-00000	111
500-9339.00-00000	111
500-9344.00-00000	111
500-9347.00-00000	110
500-9350.00-00000	111
500-9356.00-00000	111
500-9395.00-00000	103
500-9402.00-00000	115
500-9407.00-00000	117
500-9408.00-00000	117
500-9409.00-00000	117
500-9415.00-00000	117
500-9420.00-00000	115
500-9428.00-00000	115
500-9444.00-00000	117
500-9456.00-00000	117
500-9457.00-00000	117
500-9458.00-00000	117
501-9320.00-00000	109
501-9321.00-00000	109
501-9332.00-00000	109
501-9333.00-00000	109
501-9337.00-00000	111
501-9338.00-00000	111
501-9356.00-00000	111
501-9360.00-00000	111
501-9420.00-00000	115
501-9428.00-00000	115
501-9437.00-00000	115
501-9438.00-00000	115
501-9443.00-00000	117
501-9444.00-00000	117
501-9445.00-00000	117
501-9446.00-00000	117
501-9447.00-00000	117
501-9448.00-00000	117
501-9449.00-00000	117
501-9450.00-00000	117
501-9455.00-00000	117
501-9456.00-00000	117
501-9457.00-00000	117
501-9458.00-00000	117
501-9459.00-00000	117
501-9460.00-00000	117
501-9461.00-00000	117
501-9462.00-00000	117
501-9505.00-00000	211
501-9506.00-00000	211
501-9507.00-00000	211
501-9508.00-00000	211
501-9510.00-00000	211
501-9511.00-00000	211
501-9512.00-00000	211
501-9513.00-00000	211
501-9605.00-00000	211
501-9606.00-00000	211
507-9001.00-00000	328
507-9003.00-00000	224
507-9005.00-00000	328
507-9007.00-00000	224
507-9009.00-00000	328
507-9011.00-00000	224
507-9015.00-00000	328
507-9017.00-00000	224
507-9021.00-00000	329
507-9023.00-00000	225
507-9025.00-00000	329
507-9027.00-00000	225
507-9201.00-00000	234
507-9202.00-00000	234
507-9208.00-00000	333
507-9209.00-00000	333
507-9210.00-00000	232
507-9211.00-00000	232
507-9230.00-00000	337
507-9231.00-00000	337
507-9234.00-00000	337
507-9235.00-00000	337
507-9238.00-00000	234
507-9240.00-00000	234
507-9262.00-00000	337
507-9263.00-00000	337
507-9265.00-00000	226
507-9266.00-00000	337
507-9267.00-00000	337
507-9268.00-00000	226
508-9602.00-00000	324
508-9605.00-00000	324
508-9608.00-00000	324
508-9611.00-00000	330
508-9614.00-00000	330
508-9617.00-00000	330
511-9102.00-00000	305, 389
511-9302.00-00000	305, 389
532-9303.00-00000	459
535-9505.00-00000	211
535-9506.00-00000	211
535-9605.00-00000	211
535-9606.00-00000	211
535-9607.00-00000	211
535-9608.00-00000	211
565-9601.00-00000	420
565-9602.00-00000	420
580-9007.00-00001	765
580-9008.00-00001	765
580-9009.00-00001	765
580-9010.00-00001	765
701-7049.00-00000	770
701-7066.00-00000	684
701-7067.00-00000	684
701-7068.00-00000	684
703-9001.00-00120	654
703-9001.00-00200	654
703-9002.00-00120	655
703-9002.00-00200	655
703-9003.00-00140	656
703-9003.00-00220	656
703-9011.00-00000	652
703-9012.00-00000	653
800-0022.00-00000	755
800-0035.00-00000	755
800-0036.00-00000	755
800-0064.00-00000	169
800-0074.00-00000	755
800-9001.00-00000	752
800-9002.00-00000	752
840-6798.00-00023	169
860-0934.00-00005	755
860-0934.00-00008	755
860-0965.00-00512	755
860-0965.00-00516	755
860-0965.00-00520	755
860-0965.00-00525	755
860-0965.00-00530	755
860-0965.00-00540	755
860-0965.00-00612	755
860-0965.00-00616	755
860-0965.00-00620	755
860-0965.00-00625	755
860-0985.00-00005	755

Notes

Notes

DIRAK Notes

General Terms of Business of
DIRAK Dieter Ramsauer Konstruktionselemente GmbH
Issue February 2019

Prefatory remark
All our deliveries and services are subject solely to our General Terms of Business. We will oppose the incorporation of our contract partners‘ / clients‘ General Terms of Business. Provisions which are individually contractually agreed in the context of the contractual relationship shall have priority over the General Terms of Business.

1. Purchase orders and order acceptance
(1) We explicitly reserve the right for ordered or delivered items to deviate from the purchase order where such deviation does not run counter to normal utilisation, in particular with regard to materials and execution.

(2) Product descriptions – especially in our catalogues – do not represent a description of the quality composition, but are merely exemplary presentations.

(3) The client is obliged to inform us in writing, and in good time, if the quality composition of the product, or a special execution or specific material, is of particular significance for the intended utilisation.

(4) Frame-contracts are valid 12 month except not otherwise agreed. After the expiration of the contract DIRAK is in the position to deliver the remaining quantities to the agreed conditions of the contract.

2. Delivery time
(1) The delivery dates stated by us are generally non-binding, and simply designate a period of around 1 to 2 weeks before or after the stated date, unless they have been explicitly confirmed by us in writing in the form of a „binding delivery date“. The client is obliged to inform us in good time if non-observance of the projected delivery date could result in a loss. In such cases, we are prepared to agree a „binding“ delivery date – where appropriate in return for a suitable surcharge – and to guarantee adherence to that date.

(2) In the event of a delay for which we are responsible, the client is only entitled to enforce further rights if the client has set a subsequent deadline of at least three weeks, and that deadline has elapsed without success.

3. Shipping
(1) If it is necessary to ship the ordered goods, shipping will take place from the supplier‘s principal place of business at the contract partner‘s / client‘s expense and risk. In the absence of specific agreements, we shall be free to select the shipping company and shipping method. Even if carriage-paid delivery has been agreed, the risk will be transferred to the client when the goods are shipped from the supplier‘s principal place of business.

(2) If shipping is delayed due to reasons for which the client is responsible, the risk will already be transferred to the client at the time of shipping readiness. The client must bear the costs caused by the delay (especially warehousing charges).

(3) The supplier is not obliged to insure the consignment against transport damage, or to arrange for such insurance, unless the supplier has given such an undertaking in writing.

4. Liability for defects
(1) The client is obliged to examine the delivered goods immediately following delivery, and to notify us immediately, and in writing, of any existing defects (at the latest, by the third working day following the delivery). Detectable defects which, contrary to the above obligation, are notified too late will not be entertained by us and will not be covered by the warranty. Notices of defect will only be acknowledged if lodged in writing and addressed to ourselves. Notices of defect lodged with field staff, shippers or other third parties shall be invalid.

(2) The supplier‘s prior agreement must be obtained if it is necessary to return goods to the supplier in the event of a defect. The supplier need not accept returns which are sent without his prior agreement. In that event, the client will bear the costs of the return shipment.

(3) The provisions governing the delivery period will apply accordingly in the event that, based on a justified notice of defect, a retrospective improvement or replacement delivery is made.

(4) The client shall have the following rights based on the existence of a defect which has been determined as such, and which has been notified by means of a valid notice of defect:

(a) In the event of a defect, the client shall initially be entitled to demand retrospective performance from the supplier. In this regard, the supplier is entitled to choose whether to deliver a replacement object or to remedy the defect.

(b) Furthermore, if a retrospective performance attempt fails, the supplier may make a further retrospective performance attempt, and again may make a choice in this regard. The client shall only be entitled to repudiate the contract or reduce the purchase price once the repeated retrospective performance attempt has failed.

(5) Any further rights are ruled out unless the supplier is guilty of premeditation or gross negligence.

(6) The warranty period is one year from the date of delivery. The client must, under all circumstances, prove that the defect was already present at the time of delivery.

(7) In case of any return shipments DIRAK is allowed to charge handling expenses.

5. Other liability in respect of breach of duty by the supplier
Without prejudice to the provisions governing the warranty or other special arrangements contained in these provisions, the following shall apply in cases where the supplier is in breach of duty:

(1) The client must set the supplier an appropriate retrospective performance deadline to rectify the breach of duty; this deadline must not be under three weeks.

(2) The client may only repudiate the contract and/or demand damage compensation once this retrospective performance deadline has elapsed without success.

(3) The client may only enforce a damage compensation claim in cases of grossly negligent or premeditated breach of duty by the supplier. Damage compensation in place of the service (in the case of non-performance, § 280 III in conjunction with § 281 German Civil Code) and delayrelated damage (§ 280 II in conjunction with § 286 German Civil Code) shall be limited to the negative interest, while damage compensation for a service which has not been performed, or which has not been performed in the manner owed (§ 282 German Civil Code), shall be limited to the amount of the purchase price. Damage compensation in place of the service shall be ruled out in the event that the obligation to render the service is excluded (performance impossibility).

(4) In the event of a merely negligent breach of duty by ourselves or those employed in performing an obligation for which we are vicariously liable, our liability shall be limited to contractually typical and predictable damage, unless grossly negligent behaviour is present, or unless there has been an injury to life, limb or health.

(5) Repudiation shall be ruled out if the client is solely or primarily responsible for the circumstances which would entitle him to repudiate the contract, or if the circumstance which would entitle the client to repudiate the contract occurred during the period when the client delayed acceptance.

6. Exclusion of procurement risk and guarantees
The supplier does not assume any procurement risk or any guarantees of any kind unless a specific written agreement has been reached with the client in this regard.

7. Prices
Prices will be invoiced from the supplier‘s principal place of business in EURO excluding the relevant applicable turnover tax.

8. Payment terms
(1) All the supplier’s invoices shall be payable within 30 days of invoice date net cash. The deduction of a discount as well as any other amendment to this term shall require prior written agreement.

(2) In case a buying party is in delay with his payment, we are charging an administration fee of 5/10/20 Euro for each reminder. An additional default interest has to be paid according to legal provisions. We also reserve the right (in accordance with Section 288 [5] of the German Civil Code) to claim payment of a lump sum of €40.00.

(3) The exercise of a right of retention or offsetting shall be ruled out unless the counterclaim is undisputed or has been legally determined in a non-appealable manner.

9. Reservation of title
(1) All goods delivered by the supplier shall remain the supplier‘s property until the purchase price has been paid in full, and until all other claims deriving from the business relationship have been met in full (extended reservation of title). Any disposal by the client, regardless of the manner of such disposal, of the goods in respect of which title is reserved, shall only be permitted in the context of the client‘s normal business dealings. The goods may not, under any circumstances, be transferred to a third party by means of security.

(2) In the event of the goods being sold in the context of normal business dealings, the purchase price shall take the place of the goods. On accepting the goods, the client already assigns all claims deriving from any sale to the supplier, and the supplier accepts this assignment. The client is entitled to collect these claims as long as he meets his payment obligations to the supplier. In consideration of the extended reservation of title (advance assignment of the relevant purchase price demand), an assignment to third parties, in particular to a credit institution, is prohibited. The supplier is entitled to check the client‘s sales documentation at any time, and to inform the client‘s clients of the assignment.

(3) In the event of a levy of execution in respect of goods at the client‘s premises, the supplier must be informed immediately of the fact that the distrained goods are the goods delivered by the supplier in respect of which title is reserved. This notification must be accompanied by an official copy of the protocol of execution together with a statutory declaration in lieu of oath.

(4) If, for the foreseeable future, the value of the securities pursuant to the above paragraphs of this article exceeds the amount of the outstanding claims thus secured by more than 20%, the client shall be entitled to demand that the supplier release securities to the value of the surplus amount.

(5) In the event of payment arrears, we shall be entitled to demand return of the delivered goods, and to offset them against the arrears at our purchase price or cost price.

(6) Enforcement of the supplier‘s rights deriving from the reservation of title shall not exempt the client from his contractual obligations. The value of the goods at the time they are taken back will simply be offset against the supplier‘s existing claims against the client.

10. Supplier‘s right of repudiation
The supplier shall be entitled to repudiate the contract for the following reasons:

(1) If it should transpire, contrary to the assumption at the time of contract conclusion, that the client is not credit-worthy. In particular, the client shall be deemed to be unworthy of credit if a bill of exchange or cheque is protested, if the client ceases payment or if an unsuccessful attempt at execution is made.

(2) If it should transpire that the client made false statements regarding his creditworthiness.

(3) If the goods in respect of which the supplier has reserved title are disposed of without the supplier‘s consent and outside the client‘s normal business dealings, especially by being transferred by way of security or being pledged. The only exceptions are if the supplier gave his consent in writing to such disposal.

11. Place of performance and legal venue
(1) If the client is an entrepreneur or a legal entity under public law or a special fund under public law, the supplier‘s principal place of business shall be the sole legal venue for all disputes arising directly or indirectly from the contractual relationship. Furthermore, each contracting party shall be entitled to sue the other party at the party‘s general legal venue.

(2) All agreements between ourselves and our contract partners/ clients must be in writing. This also applies to setting aside the written form requirement.

(3) The law of the Federal Republic of Germany shall apply in all cases, in particular also in cases of cross-border deliveries. The provisions of the UN Purchase Law shall not apply.

12. Partial nullity
Should contractual agreements be or become wholly or partially invalid, or should it transpire that there is a loophole in the contract, the validity of the remaining contractual agreements shall not be affected thereby. In such a case, the contract parties are obliged to replace the invalid contract provision with a valid one, and to close the contract loophole with a provision which most closely approximates to the commercial intention.

DIRAK.com

Find Contact

Newsletter

YouTube

LinkedIn

Hinge recommendation

CAD Data

Let us find your solution!

Thank you for taking the time to look through our product selection.

Does your application have special requirements? Our experts will find the right solution – either from our standard assortment or from an individual product development tailored to your needs.

We are looking forward to discussing a solution with you.
By phone: **+49 (0) 2333 / 837-0**
E-mail: **info@dirak.de**

Or simply use our contact finder.

You can reach us at any time.

Explanation of the symbols:
Please unfold.

Data status: September 2022
Part No. 910-0101.02-00000

This catalog is subject to technical changes. We accept no liability for any misprints. Our general terms and conditions apply exclusively for all deliveries. Reproduction or publication – even in part – is only permitted with our approval.

All measurements in the catalog are given in mm.

Design: jungepartner.de

DIRAK GmbH
Königsfelder Straße 1
58256 Ennepetal
+49 (0) 2333 / 837-0
info@dirak.de

DIRAK.com
ELINEBYDIRAK.com

All (=black) / some (=gray) products on this page have this feature

DIRAK-SNAP-Technology

Tool-less installation

Product line base

Stainless steel / Hygienic design

UL-listed materials

UR / UL certification

Pr14.1: cutout size 14.1 mm / Pr20.1: cutout size 20.1 mm

Standard cutout size swinghandle

Safety-tested in accordance with DIN EN 1627

Shock- and vibration-tested in accordance with DIN EN 61373

Product suitable for round rod / flat rod

Captive seal: foamed PUR seal / pressed in o-ring

Profile half-cylinder in accordance with DIN 18252

RH / LH application

Door nested, hinge visible / invisible

Door surface-mounted, hinge visible / partly visible / invisible

Individual or adjacent cabinets

Opening angle of hinges from 90° to 270°

Hinge lift-off

Product is grounded if correctly installed

IP protection classes 54, 65, 67, 66, 69K as respectively indicated

Maximum recommended tightening torque for securing nuts of the quarter-turns

Max. recommended tightening torque for the serrated screw

Conforms to RoHS and WEEE directives

Function extension / Accessories and Specific accessories / Assembly options